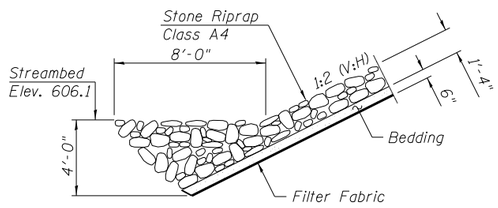

SECTION A-A

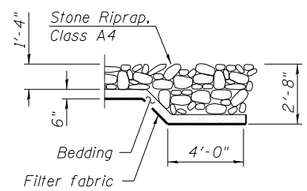

SECTION B-B

STATION 98+62.28
BUILT 201_ BY
STATE OF ILLINOIS
F.A.P. RT. 307 SEC. 541Y-3-B
LOADING HL-93
STRUCTURE NO. 016-3035

NAME PLATE
(See Std. 515001)

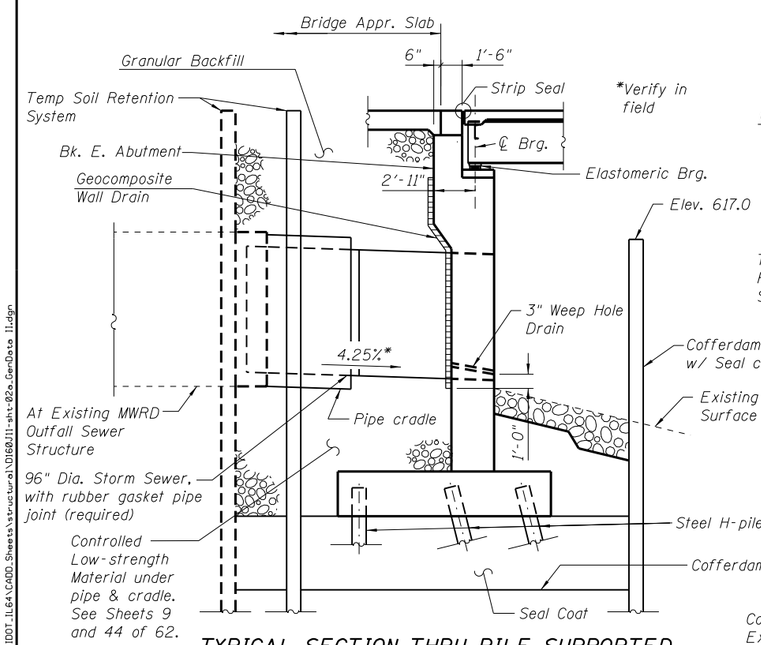

TYPICAL SECTION THRU PILE SUPPORTED EAST CLOSED ABUTMENT

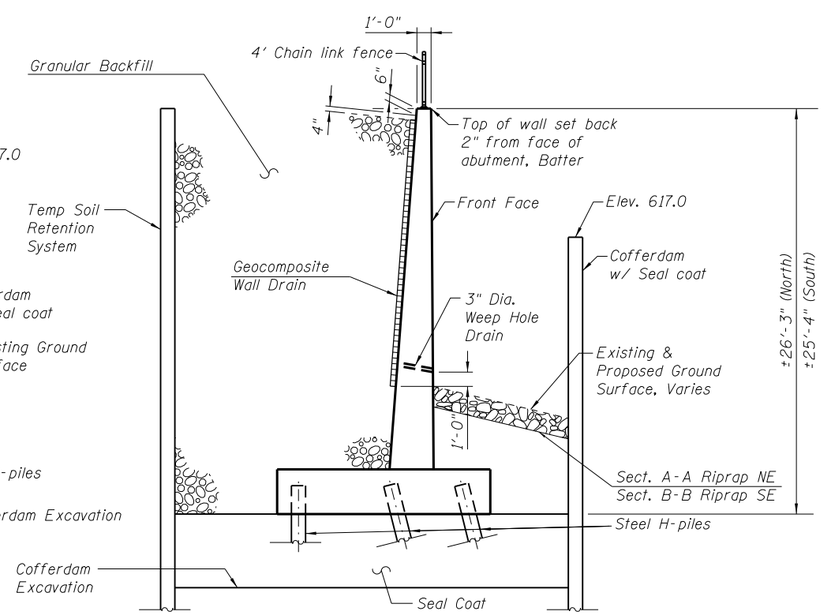

TYPICAL SECTION THRU EAST ABUTMENT WINGWALLS

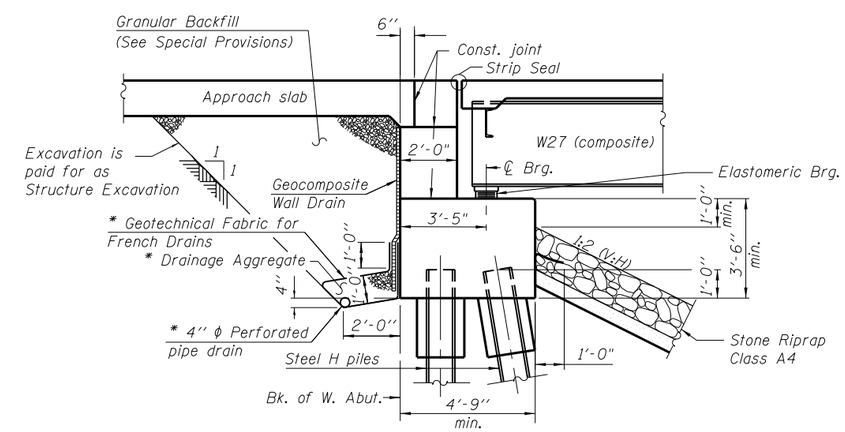

* Included in the cost of Pipe Underdrains for Structures 4". (See Special Provisions)

All drainage system components shall extend parallel to the abutment back wall until they intersect the wingwalls or 2'-0" from the end of the wingwalls when the wings are parallel to the abutment. The pipe shall extend under the wingwall, if necessary, until intersecting the side slopes. The pipes shall drain into concrete headwalls. (See Article 601.05 of the Standard Specifications and Highway Standard 601101).

TYPICAL SECTION THRU PILE SUPPORTED WEST STUB ABUTMENT

FILE NAME = W:\191-130_IDOT_IL64\CADD_Sheets\structural\D160J11-sht-02a_Gen-Data_II.dgn

Bollinger, Lach & Associates, Inc.
ITASCA, ILLINOIS

USER NAME =	DESIGNED - JJI	REVISED
	CHECKED - JMT	REVISED
PLOT SCALE =	DRAWN - GM	REVISED
PLOT DATE = 8/16/2013	CHECKED - JMT	REVISED

STATE OF ILLINOIS
DEPARTMENT OF TRANSPORTATION

GENERAL DATA II
STRUCTURE NO. 016-3035
SHEET NO. 3 OF 62 SHEETS

F.A.P. RTE.	SECTION	COUNTY	TOTAL SHEETS	SHEET NO.
307	541Y-3-B	COOK	143	64

CONTRACT NO. 60J11
ILLINOIS FED. AID PROJECT