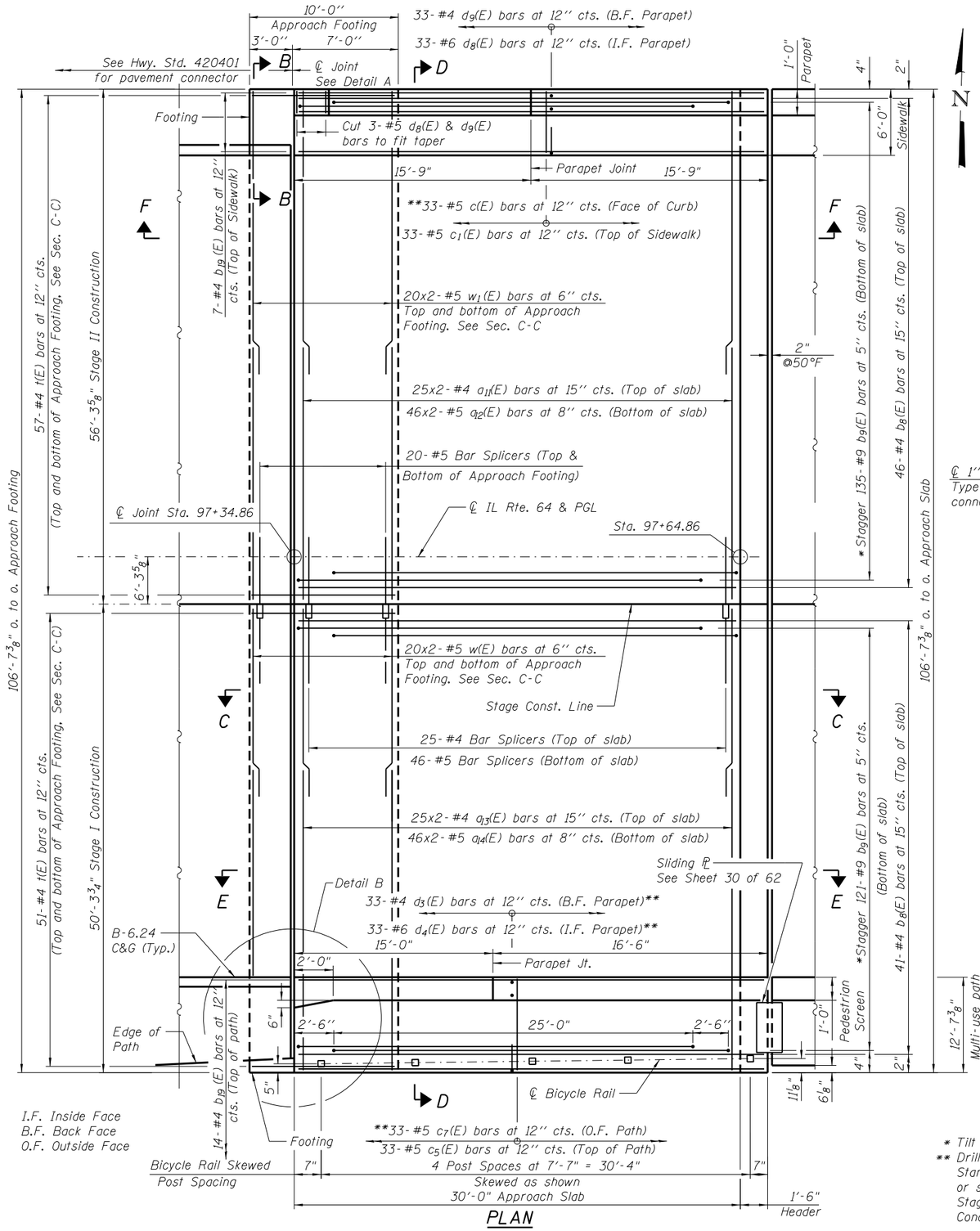

PLAN

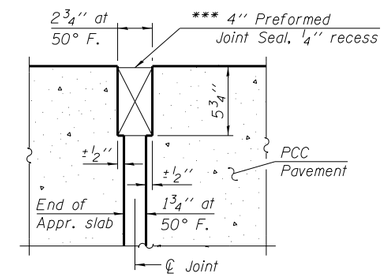

RIGID PAVEMENT

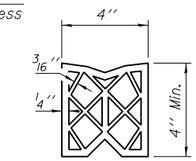

PREFORMED JOINT SEAL

Notes:

See sheet 24 of 62 for Sections C-C & D-D. View E-E and F-F.

See sheet 21 of 62 for Parapet Joint Details.

$a_{11}(E)$ thru $a_{14}(E)$ bar spacings measured along ℄ Rdwy.

Bars indicated thus 20x2 - #5 etc. indicates 20 lines of bars with 2 lengths per line.

See sheet 25 of 62 for Section Thru Preformed Joint Seal. Joint Seal runs up face of curb and top of sidewalk.

*** Cost included with Concrete Superstructure.

MINIMUM BAR LAP

#4 bars = 2'-1"
#5 bars = 2'-7"

DETAIL A

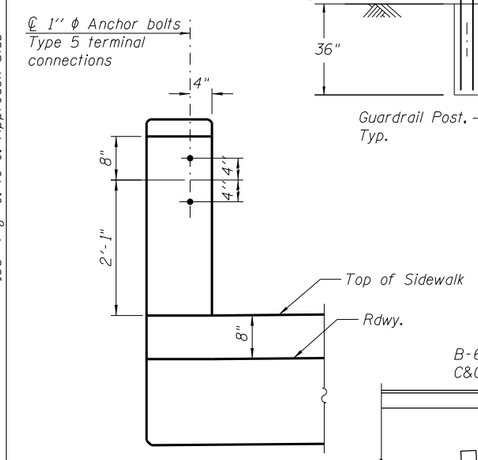

VIEW B-B

(Not showing railing for clarity)

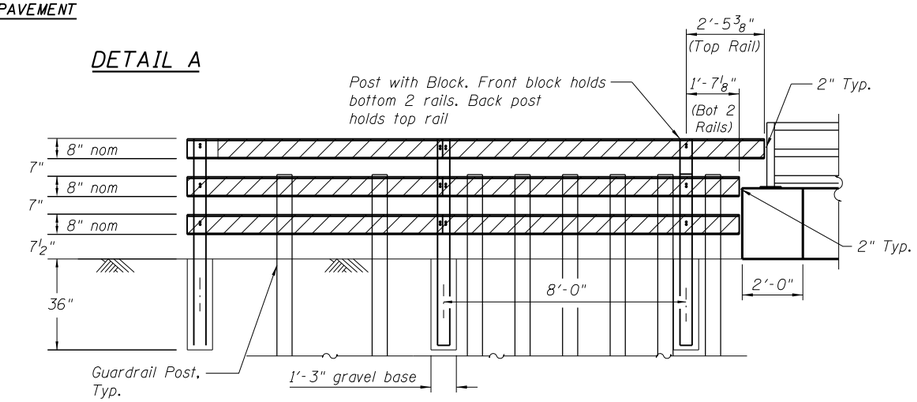

VIEW G-G

WOOD POST AND RAIL FENCE

(Stage III Const.)
(See Roadway Plans for Fence Quantities and Payment)

Notes:

Wood shall be southern pine or douglas fir. Wood shall be pressure treated with CCA or ACA. Two coats of clear sealing product shall be applied to the completed fence. See Special Provisions.

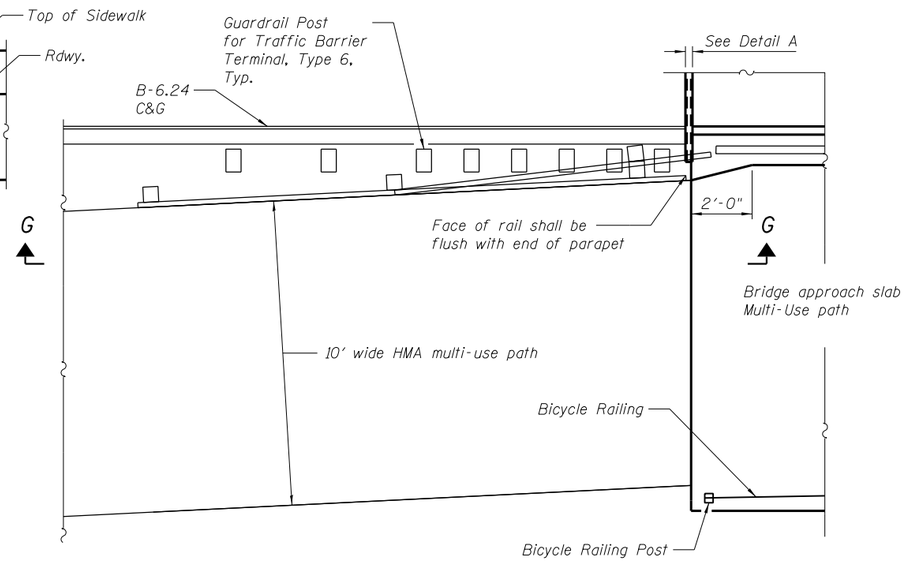

DETAIL B

Wood Post placed to miss guardrail posts.

* Tilt #9 $b_9(E)$ bars as required to maintain clearance.

** Drill and set bars according to article 509.06 of the Standard Specifications. Drilled holes shall be roughened or scored per Manufacturer's recommendations during Stage I and II Construction. Cost included with Concrete Superstructure.

(Sheet 1 of 2)

FILE NAME = W:\191-138_IDOT_IL64\CADD_Sheets\structural\D160J11-sht-19_WoodpostSlab.dgn

Bollinger, Lach & Associates, Inc. ITASCA, ILLINOIS	USER NAME =	DESIGNED - JMT	REVISED
		CHECKED - JJI	REVISED
	PLOT SCALE =	DRAWN - GM	REVISED
	PLOT DATE = 8/16/2013	CHECKED - JJI	REVISED

STATE OF ILLINOIS
DEPARTMENT OF TRANSPORTATION

WEST BRIDGE APPROACH SLAB
STRUCTURE NO. 016-3035

SHEET NO. 23 OF 62 SHEETS

F.A.P. RTE.	SECTION	COUNTY	TOTAL SHEETS	SHEET NO.
307	541Y-3-B	COOK	143	84
		CONTRACT NO. 60J11		
	ILLINOIS FED. AID PROJECT			