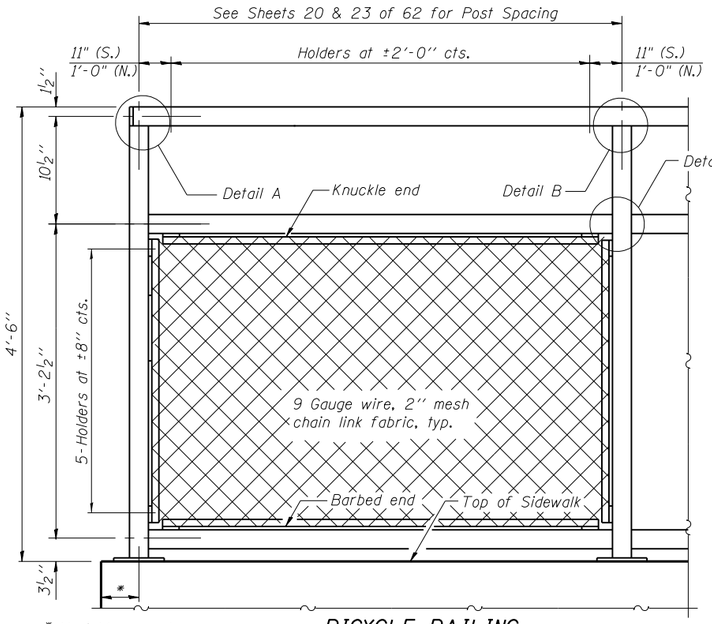

* Variable see plans

BICYCLE RAILING

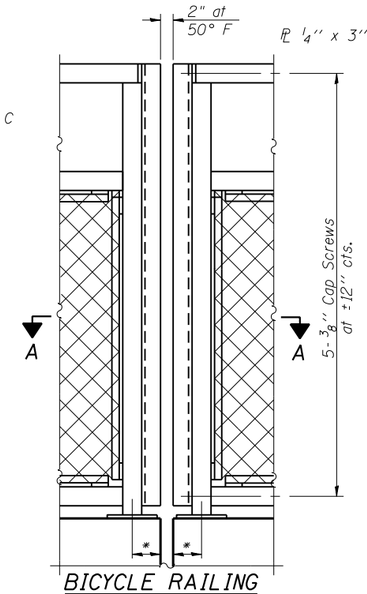

BICYCLE RAILING

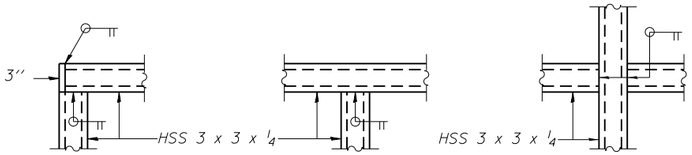

DETAIL A DETAIL B DETAIL C

Notes:
All steel rail elements shall be galvanized according to Article 509.05 of the Standard Specifications.
See Sheets 20, 24 & 29 of 62 for additional parapet rail details.

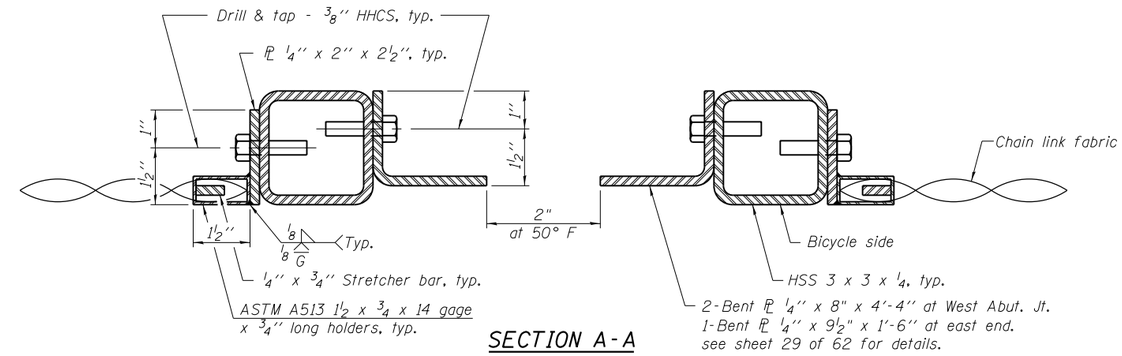

SECTION A-A

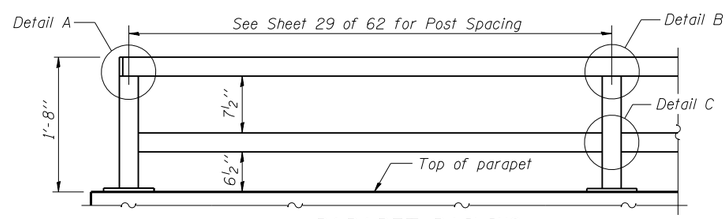

PARAPET RAILING
ELEVATION
(Inside Face of Two Element Rail)

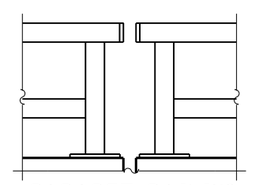

PARAPET RAILING
ELEVATION AT EXPANSION JOINT
(Two Element Rail Shown - Three Element Rail Similar)

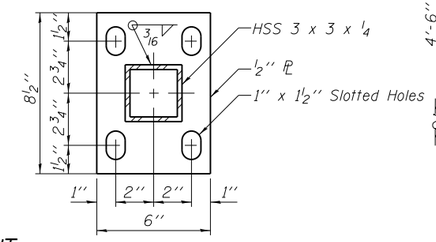

BASE PL

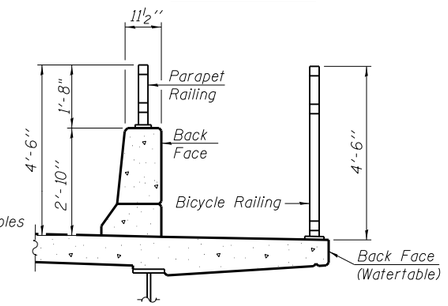

SECTION THRU DECK

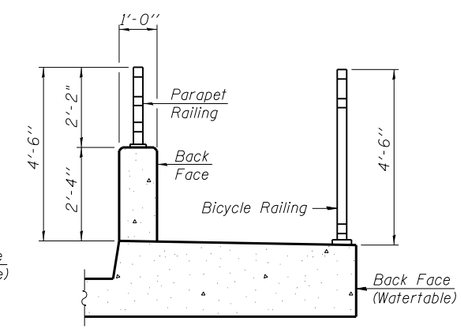

SECTION THRU SIDEWALK

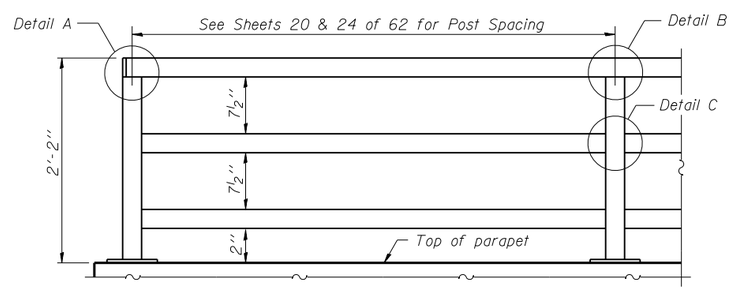

PARAPET RAILING
ELEVATION
(Inside Face of Three Element Rail)

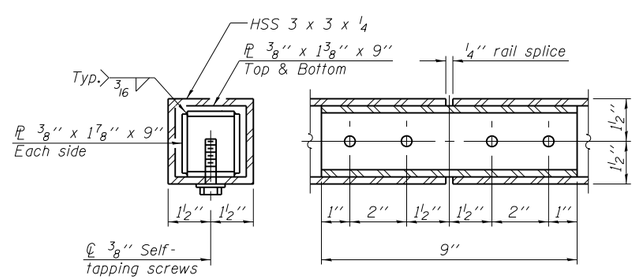

RAIL SPLICE

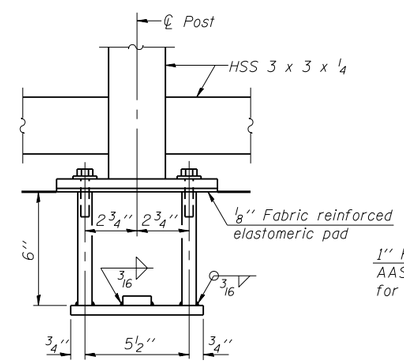

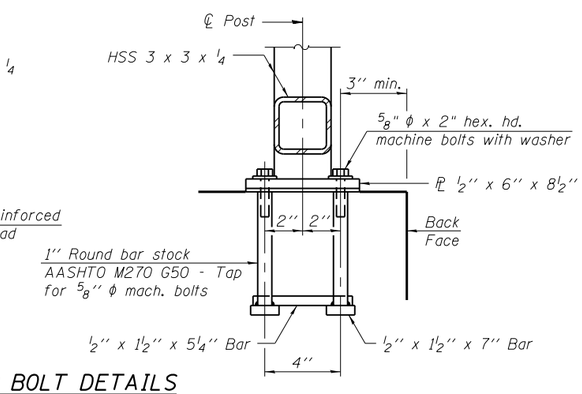

ANCHOR BOLT DETAILS

In lieu of the cast-in-place anchor device shown, the Contractor has the option of drilling and setting ⅝" ϕ anchor rods according to Article 509.06 of the Standard Specifications. Embedment shall be according to the manufacturer's specifications.

BILL OF MATERIAL

Item	Unit	Quantity
Bicycle Railing	Foot	184
Parapet Railing	Foot	455

R-29 1-27-12 (10'-0" Maximum Post Spacing)

FILE NAME = W:\191-138_IDOT_IL64\CADD_Sheets\structure\1\D160J11-sht-23_BrFRailDet.dgn

Bollinger, Lach & Associates, Inc.
ITASCA, ILLINOIS

USER NAME =	DESIGNED -	REVISED	
	CHECKED -	REVISED	
PLOT SCALE =	DRAWN - GM	REVISED	
PLOT DATE = 8/16/2013	CHECKED - JMT	REVISED	

STATE OF ILLINOIS
DEPARTMENT OF TRANSPORTATION

BICYCLE RAILING
STRUCTURE NO. 016-3035
SHEET NO. 28 OF 62 SHEETS

F.A.P. RTE.	SECTION	COUNTY	TOTAL SHEETS	SHEET NO.
307	541Y-3-B	COOK	143	89
		CONTRACT NO. 60J11		
		ILLINOIS FED. AID PROJECT		