Notes:

AASHTO M270 Grade 50 shall be used for all beams.

Structural steel for flange and web splice plates shall be AASHTO M 270 Grade 50. The structural steel for diaphragm, connection plates and angles may be AASHTO M 270 Grade 36.

Two hardened washers required for each set of oversized holes.

Load carrying components designated "NTR" shall conform to the Impact Testing Requirement, Zone 2.

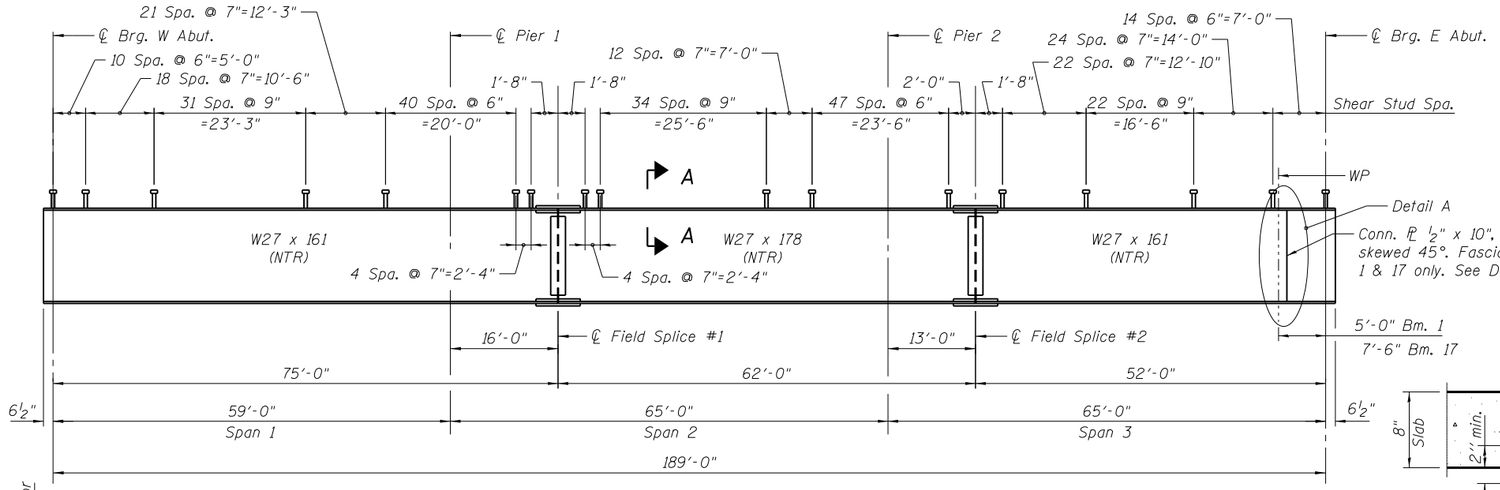

BEAM ELEVATION

Beams 1 thru 17

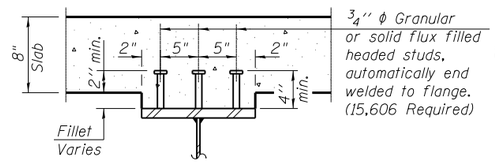

SECTION A-A

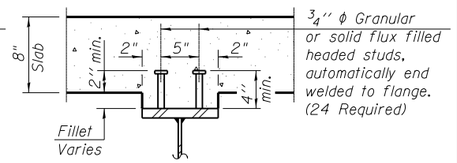

SECTION B-B

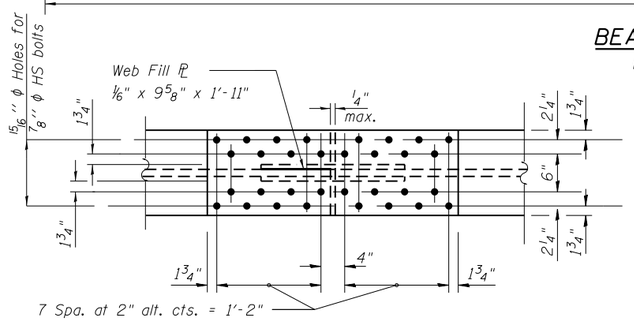

PLAN

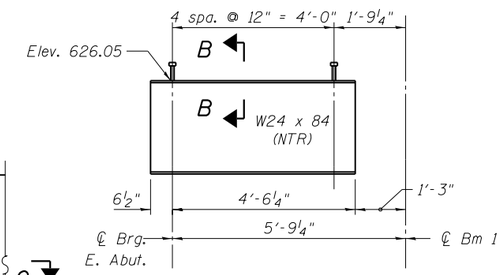

BEAM 1a ELEVATION

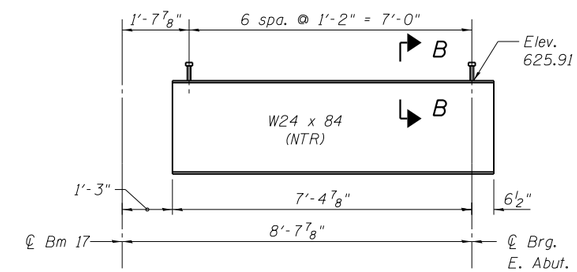

BEAM 17a ELEVATION

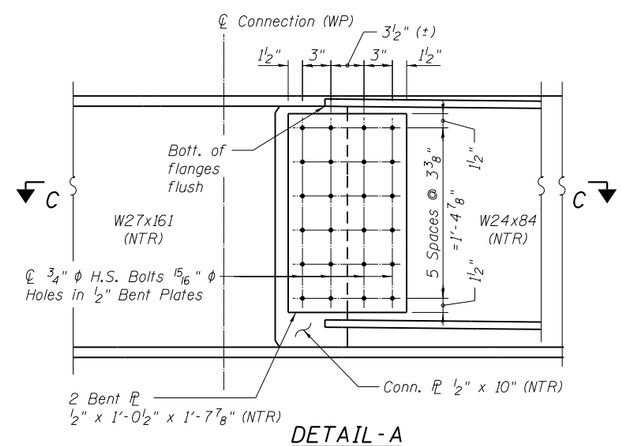

DETAIL-A

(Bm. 17a shown, Bm. 1a sim.)

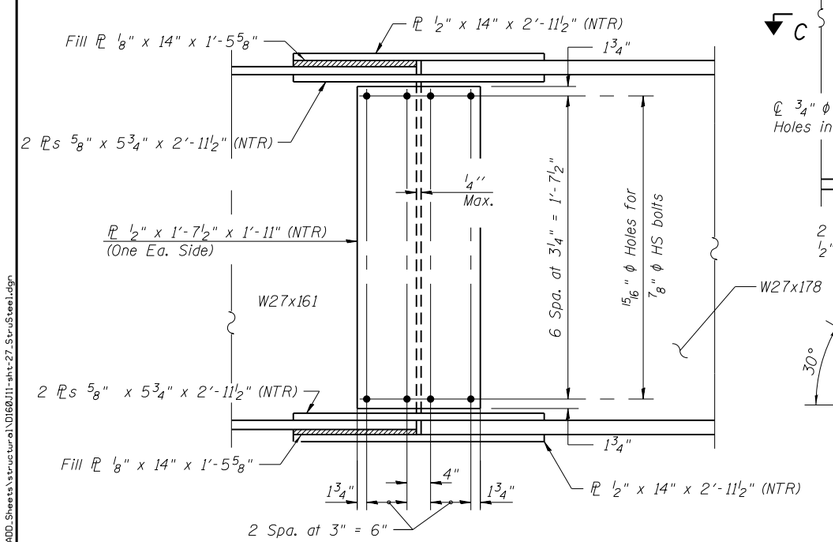

ELEVATION

SPLICE 1 & 2 DETAIL

(34 Required)

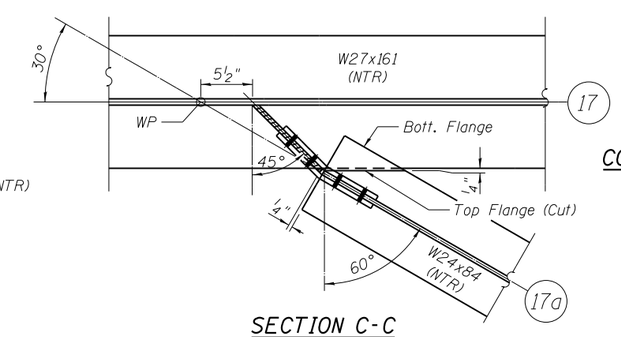

SECTION C-C

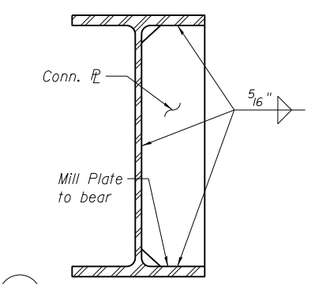

CONNECTION PLATE

* TOP OF BEAM ELEVATIONS

Beam No.	℄ Brg. W. Abut.	℄ Pier 1	℄ Splice 1	℄ Pier 2	℄ Splice 2	℄ Brg. E. Abut.
1	627.39	627.23	627.19	626.83	626.74	626.11
2	627.52	627.36	627.32	626.96	626.87	626.24
3	627.65	627.49	627.45	627.09	627.00	626.37
4	627.77	627.61	627.57	627.21	627.12	626.49
5	627.87	627.71	627.67	627.31	627.21	626.59
6	627.96	627.81	627.77	627.41	627.31	626.68
7	628.06	627.91	627.87	627.51	627.41	626.78
8	628.16	628.01	627.96	627.60	627.51	626.88
9	628.16	628.01	627.97	627.61	627.51	626.88
10	628.06	627.91	627.87	627.51	627.41	626.78
11	627.97	627.81	627.77	627.41	627.31	626.69
12	627.87	627.71	627.67	627.31	627.22	626.59
13	627.77	627.62	627.58	627.22	627.12	626.49
14	627.65	627.50	627.46	627.10	627.00	626.37
15	627.52	627.37	627.33	626.97	626.87	626.24
16	627.41	627.26	627.21	626.85	626.76	626.13
17	627.32	627.17	627.13	626.77	626.67	626.04

* For fabrication only

FILE NAME = W:\191-130_IDOT_IL64\CADD_Sheets\structural\D160J11-sht-27_StruSteel.dgn

Bollinger, Lach & Associates, Inc.
ITASCA, ILLINOIS

USER NAME =	DESIGNED - JJI	REVISED
	CHECKED - JMT	REVISED
PLOT SCALE =	DRAWN - GM	REVISED
PLOT DATE = 8/16/2013	CHECKED - JMT	REVISED

STATE OF ILLINOIS
DEPARTMENT OF TRANSPORTATION

STRUCTURAL STEEL DETAILS I
STRUCTURE NO. 016-3035

SHEET NO. 32 OF 62 SHEETS

F.A.P. RTE.	SECTION	COUNTY	TOTAL SHEETS	SHEET NO.
307	541Y-3-B	COOK	143	93
		CONTRACT NO. 60J11		
		ILLINOIS FED. AID PROJECT		