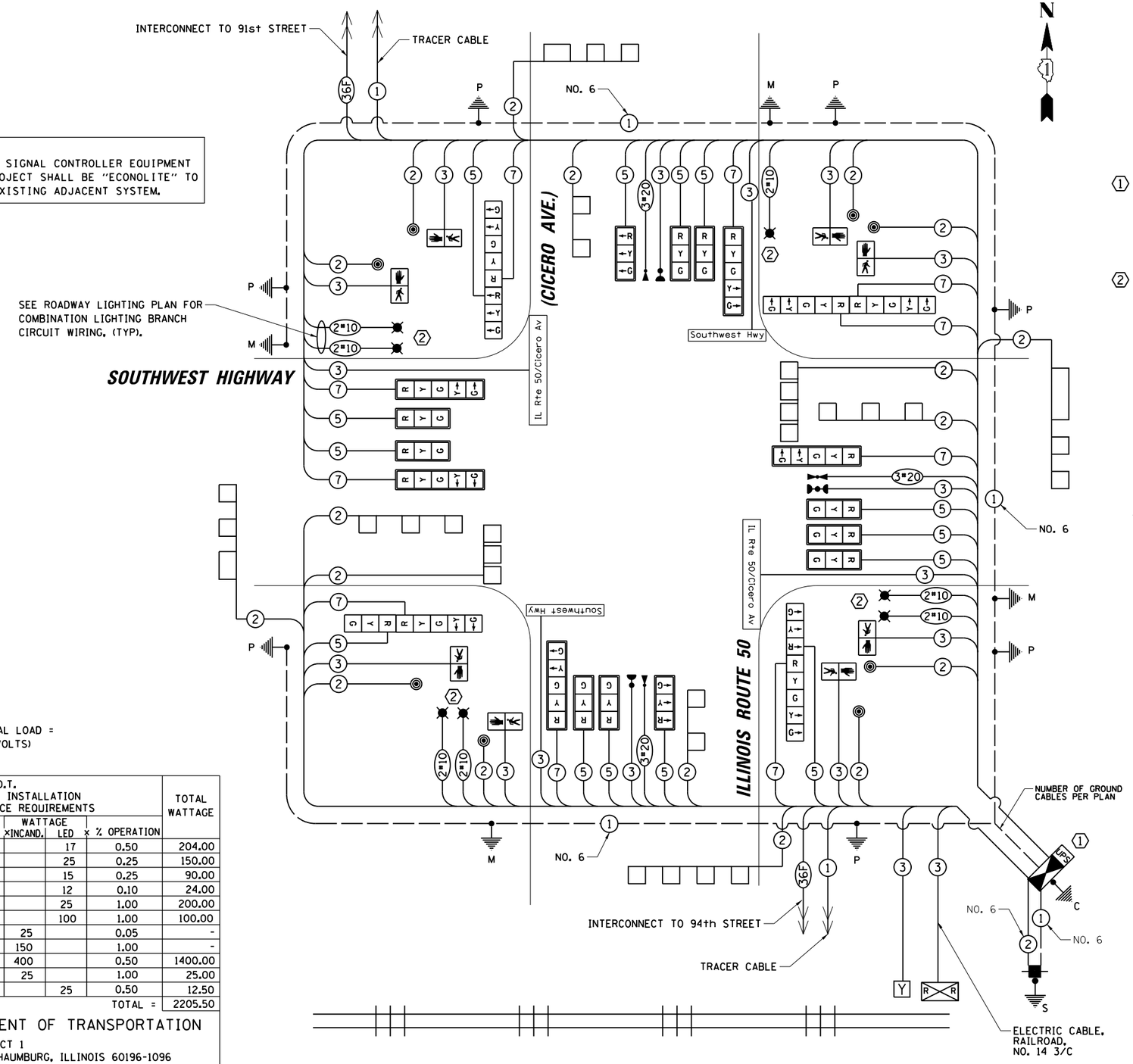

NOTE:
THE TRAFFIC SIGNAL CONTROLLER EQUIPMENT FOR THIS PROJECT SHALL BE "ECONOLITE" TO MATCH THE EXISTING ADJACENT SYSTEM.

MAXIMUM CABINET ELECTRICAL LOAD =
5.0 KW (41.8 AMPS AT 120 VOLTS)

I.D.O.T. TRAFFIC SIGNAL INSTALLATION ELECTRICAL SERVICE REQUIREMENTS					TOTAL WATTAGE
TYPE	NO. OF LAMPS	WATTAGE INCAND.	WATTAGE LED	x % OPERATION	
SIGNAL (RED)	24		17	0.50	204.00
(YELLOW)	24		25	0.25	150.00
(GREEN)	24		15	0.25	90.00
ARROW	20		12	0.10	24.00
PED. SIGNAL	8		25	1.00	200.00
CONTROLLER	1		100	1.00	100.00
ILLUMINATED SIGN	-	25		0.05	-
VIDEO SYSTEM	-	150		1.00	-
LUMINAIRE	7	400		0.50	1400.00
BATTERY BACKUP	1	25		1.00	25.00
FLASHER	1		25	0.50	12.50
ENERGY COSTS TO:				TOTAL =	2205.50

ILLINOIS DEPARTMENT OF TRANSPORTATION
DIVISION OF HIGHWAY/DISTRICT 1
201 WEST CENTER COURT/SCHAUMBURG, ILLINOIS 60196-1096

ENERGY SUPPLY: CONTACT: LEONARD B ANDERSON
PHONE: 708-235-2346
COMPANY: COMED

CONSTRUCTION NOTE:

1. THE PROPOSED COMBINATION LIGHTING WILL OPERATE FROM THE LIGHTING CONTROLS LOCATED IN THE CONTROLLER CABINET. THE COSTS ASSOCIATED WITH THE LIGHTING CONTROL EQUIPMENT WILL BE INCLUDED IN THE PAY ITEM: RAILROAD, FULL-ACTUATED CONTROLLER AND TYPE IV CABINET, SPECIAL. SEE LIGHTING PLANS FOR COMBINATION LIGHTING BRANCH CIRCUIT WIRING, AND COMBINATION LIGHTING CONTROLLER WIRING DIAGRAM ALONG WITH EQUIPMENT SCHEDULE.

2. THE PAY ITEM: LUMINAIRE, SODIUM VAPOR, HORIZONTAL MOUNT, PHOTO-CELL CONTROL, 400 WATT SHALL INCLUDE THE COST TO FURNISH AND INSTALL SHORTING CAP THAT MEETS THE SATISFACTION OF THE ENGINEER. LUMINAIRE SHALL BE 400W-HPS COBRA HEAD TYPE WITH MCIII CUTOFF TYPE OPTICS. THE LUMINAIRE SHALL BE MOUNTED ON A 15 FT ARM WITH A 40 FT MOUNTING HEIGHT.

SCHEDULE OF QUANTITIES

ITEM	UNIT	QUANTITY
SIGN PANEL - TYPE 1	SQ FT	48
SERVICE INSTALLATION - POLE MOUNTED	EACH	1
UNDERGROUND CONDUIT, GALVANIZED STEEL, 2" DIA.	FOOT	1579
UNDERGROUND CONDUIT, GALVANIZED STEEL, 2 1/2" DIA.	FOOT	78
UNDERGROUND CONDUIT, GALVANIZED STEEL, 3" DIA.	FOOT	88
UNDERGROUND CONDUIT, GALVANIZED STEEL, 4" DIA.	FOOT	569
UNDERGROUND CONDUIT, COILABLE NONMETALLIC CONDUIT, 1 1/4" DIA.	FOOT	100
HANDHOLE	EACH	6
HEAVY-DUTY HANDHOLE	EACH	5
DOUBLE HANDHOLE	EACH	3
LUMINAIRE, SODIUM VAPOR, HORIZONTAL MOUNT, PHOTO-CELL CONTROL, 400 WATT	EACH	7
PAINT NEW TRAFFIC SIGNAL POST	EACH	7
PAINT NEW COMBINATION MAST ARM AND POLE, 40 FOOT AND OVER	EACH	4
TRANSCEIVER - FIBER OPTIC	EACH	1
ELECTRIC CABLE IN CONDUIT, SIGNAL NO. 14 2C	FOOT	2466
ELECTRIC CABLE IN CONDUIT, SIGNAL NO. 14 3C	FOOT	2587
ELECTRIC CABLE IN CONDUIT, SIGNAL NO. 14 5C	FOOT	3213
ELECTRIC CABLE IN CONDUIT, SIGNAL NO. 14 7C	FOOT	2369
ELECTRIC CABLE IN CONDUIT, LEAD-IN, NO. 14 1 PAIR	FOOT	2422
ELECTRIC CABLE IN CONDUIT, RAILROAD, NO. 14 3C	FOOT	310
ELECTRIC CABLE IN CONDUIT, SERVICE, NO. 6 2 C	FOOT	343
ELECTRIC CABLE IN CONDUIT, EQUIPMENT GROUNDING CONDUCTOR, NO. 6 1C	FOOT	1024
TRAFFIC SIGNAL POST, GALVANIZED STEEL 10 FT.	EACH	3
TRAFFIC SIGNAL POST, GALVANIZED STEEL 16 FT.	EACH	4
STEEL COMBINATION MAST ARM ASSEMBLY AND POLE 48 FT.	EACH	1
STEEL COMBINATION MAST ARM ASSEMBLY AND POLE 50 FT.	EACH	1
STEEL COMBINATION MAST ARM ASSEMBLY AND POLE 55 FT.	EACH	2
CONCRETE FOUNDATION, TYPE A	FOOT	28
CONCRETE FOUNDATION, TYPE C	FOOT	4
CONCRETE FOUNDATION, TYPE E 36-INCH DIAMETER	FOOT	60
SIGNAL HEAD, LED, 1-FACE, 1-SECTION, BRACKET MOUNTED	EACH	1
SIGNAL HEAD, LED, 1-FACE, 3-SECTION, MAST-ARM MOUNTED	EACH	11
SIGNAL HEAD, LED, 1-FACE, 5-SECTION, MAST-ARM MOUNTED	EACH	5
SIGNAL HEAD, LED, 2-FACE, 5-SECTION, BRACKET MOUNTED	EACH	1
SIGNAL HEAD, LED, 2-FACE, 1-3 SECTION, 1-5 SECTION, BRACKET MOUNTED	EACH	3
PEDESTRIAN SIGNAL HEAD, LED, 1-FACE, BRACKET MOUNTED	EACH	8
TRAFFIC SIGNAL BACKPLATE, LOUVERED, ALUMINUM	EACH	16
INDUCTIVE LOOP DETECTOR	EACH	10
DETECTOR LOOP, TYPE I	FOOT	955
LIGHT DETECTOR	EACH	3
LIGHT DETECTOR AMPLIFIER	EACH	1
PEDESTRIAN PUSH-BUTTON	EACH	8
TEMPORARY TRAFFIC SIGNAL INSTALLATION	EACH	1
REMOVE EXISTING TRAFFIC SIGNAL EQUIPMENT	EACH	1
REMOVE EXISTING HANDHOLE	EACH	14
REMOVE EXISTING CONCRETE FOUNDATION	EACH	9
EMERGENCY VEHICLE PRIORITY SYSTEM LINE SENSOR CABLE, NO. 20 3/C	FOOT	645
RAILROAD, FULL-ACTUATED CONTROLLER AND TYPE IV CABINET, SPECIAL	EACH	1
UNINTERRUPTABLE POWER SUPPLY, SPECIAL	EACH	1
LED INTERNALLY ILLUMINATED STREET NAME SIGN	EACH	4
TEMPORARY TRAFFIC SIGNAL TIMING	EACH	1

CHRISTOPHER B. BURKE ENGINEERING LTD.
9575 West Higgins Road, Suite 600
Rosemont, Illinois 60018
(847) 823-0500

PLAN — NOTE BOOK NO. ___ — SURVEYED / PLOTTED / ALIGNMENT CHECKED / RLS JOB NO. VERIFIED / CADD FILE NAME ___ — BY — DATE

PROFILE — NOTE BOOK NO. ___ — SURVEYED / PLOTTED / GRADES CHECKED / RLS JOB NO. VERIFIED / STRUCTURE NOTAT'NS CHK'D — BY — DATE

FILE NAME =	USER NAME = fbariso	DESIGNED - LJ	REVISED -
N:\idot\130116\Work Order 13018 - IL50SWHwy\Traffic\CAB_IL50-Swhy.sht		DRAWN - FPB / FCP	REVISED -
	PLOT SCALE = 40'	CHECKED - GMZ	REVISED -
	PLOT DATE = 1/22/2014	DATE -	REVISED -

STATE OF ILLINOIS
DEPARTMENT OF TRANSPORTATION

SCHEDULE OF QUANTITIES AND CABLE PLAN
IL RTE 50 (CICERO AVE.) AND SOUTHWEST HIGHWAY

SCALE: | SHEET NO. OF SHEETS | STA. TO STA.

F.A.P. RTE.	SECTION	COUNTY	TOTAL SHEETS	SHEET NO.
350	461TS-2(13)	COOK	42	25
		CONTRACT NO. 60X25		

FED. ROAD DIST. NO. | ILLINOIS | FED. AID PROJECT