SECTION 31, TOWNSHIP 36, RANGE 13

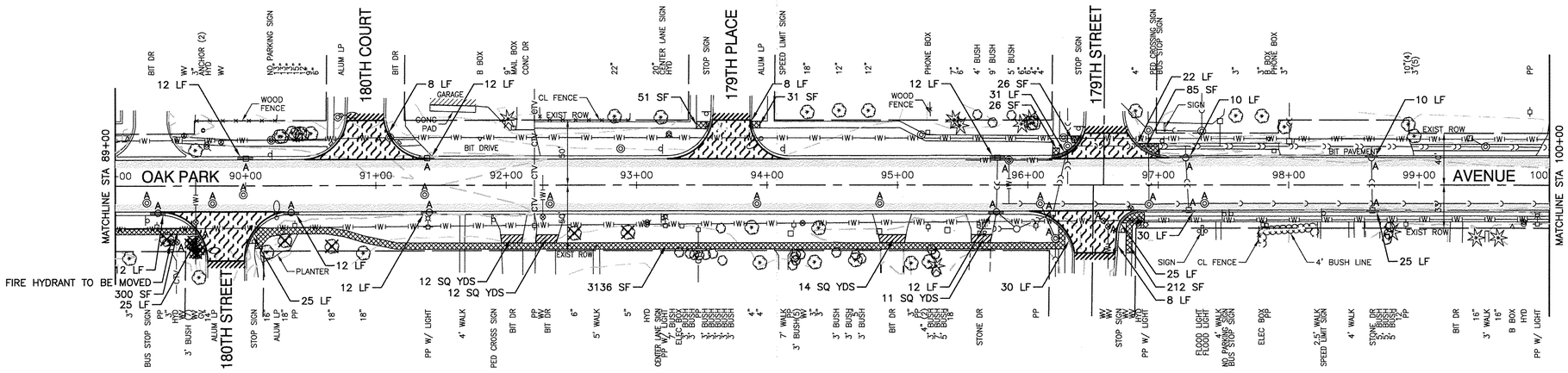

EXISTING CONDITIONS

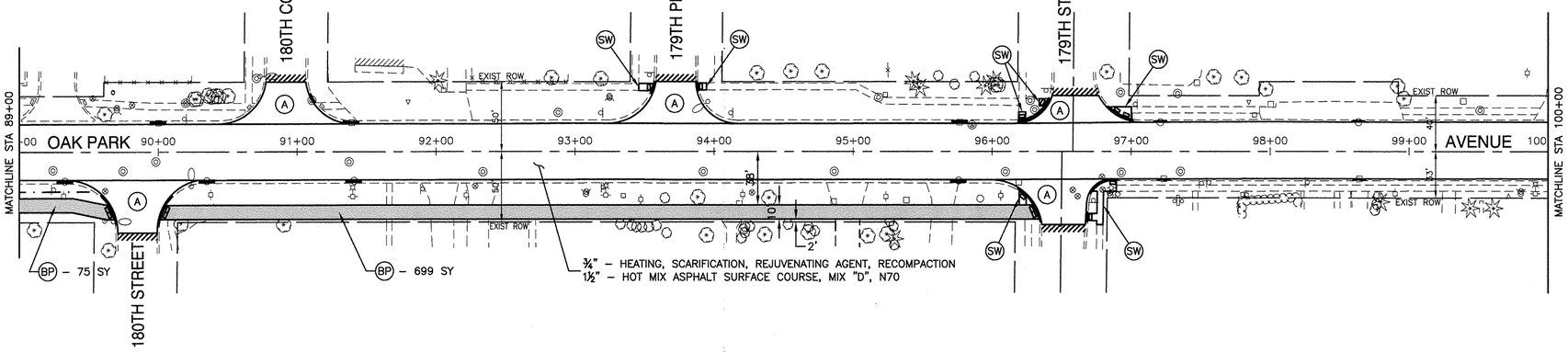

PROPOSED IMPROVEMENTS

LEGEND

- CONCRETE SIDEWALK REMOVAL
- HOT–MIX ASPHALT SURFACE REMOVAL, SPECIAL
- DRIVEWAY PAVEMENT REMOVAL
- HOT–MIX ASPHALT SURFACE REMOVAL, 2"
- HOT–MIX ASPHALT SURFACE REMOVAL, BUTT JOINT
- CURB REMOVAL
- COMBINATION CONCRETE CURB AND GUTTER REPLACEMENT
- A — STRUCTURE TO BE ADJUSTED
- R — STRUCTURE TO BE RECONSTRUCTED
- EXISTING TREE REMOVAL
- BP — HOT–MIX ASPHALT MULTI–USE PATH
  –AGGREGATE BASE COURSE, TYPE B, 6"
  –HOT–MIX ASPHALT SURFACE COURSE, IL–9.5, MIX "D", N50, 2"
- A — HOT–MIX ASPHALT SURFACE COURSE, IL–9.5, MIX "D", N70, 1½"
  LEVELING BINDER (MACHINE METHOD), N70, ¾"
- SW — P.C.C. SIDEWALK, 5"
- DETECTABLE WARNINGS

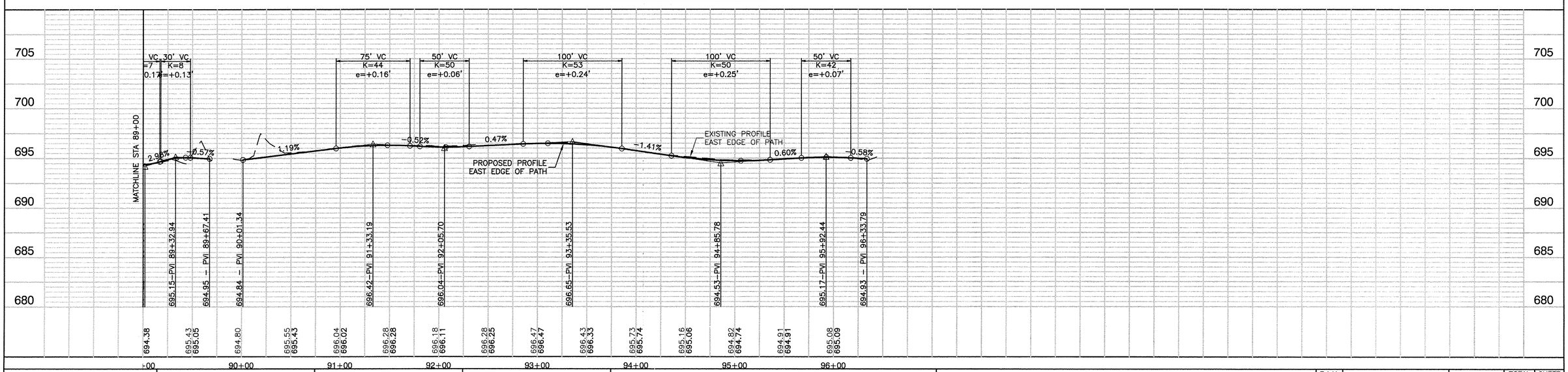

PLAN		BY	DATE
SURVEYED			
PLOTTED			
ALIGNMENT CHECKED			
R.O.W. CHECKED			
NOTE BOOK	CADD FILE NAME		
NO.			

PROFILE		BY	DATE
SURVEYED			
PLOTTED			
GRADES CHECKED			
B.M. NOTED			
NOTE BOOK			

FILE NAME = 13308-PLPR-01 - IDOT PLPR03

USER NAME =	DESIGNED — JPH	REVISED —	
	CHECKED — PKB	REVISED —	
PLOT SCALE =	DRAWN — RG	REVISED —	
PLOT DATE = 12-02-13	CHECKED — AG	REVISED —	

STATE OF ILLINOIS
DEPARTMENT OF TRANSPORTATION

OAK PARK AVENUE
ROADWAY IMPROVEMENTS
PLAN & PROFILE

SCALE: H 1"=50' V 1"=5' | SHEET NO. 7 OF 35 SHEETS | STA. | TO STA.

F.A.U. RTE.	SECTION	COUNTY	TOTAL SHEETS	SHEET NO.
2774	13-00115-00-RS	COOK	35	7

CONTRACT NO. 61A01

FED. ROAD DIST. NO. 1 | ILLINOIS | FED. AID PROJECT CMM-4003 (249)