MINIMUM REQUIREMENTS TO OPEN TO TRAFFIC

NOTE: ALL HORIZONTAL DIMENTSIONS SHOWN @ RT. ∠'S TO ℄ IL 34.

• MATCH EXISTING CROSS SLOPES

•• THE REMOVAL OF THE EXISTING BOX CULVERT AND HEADWALLS IS INCLUDED IN THE COST OF CONCRETE REMOVAL.

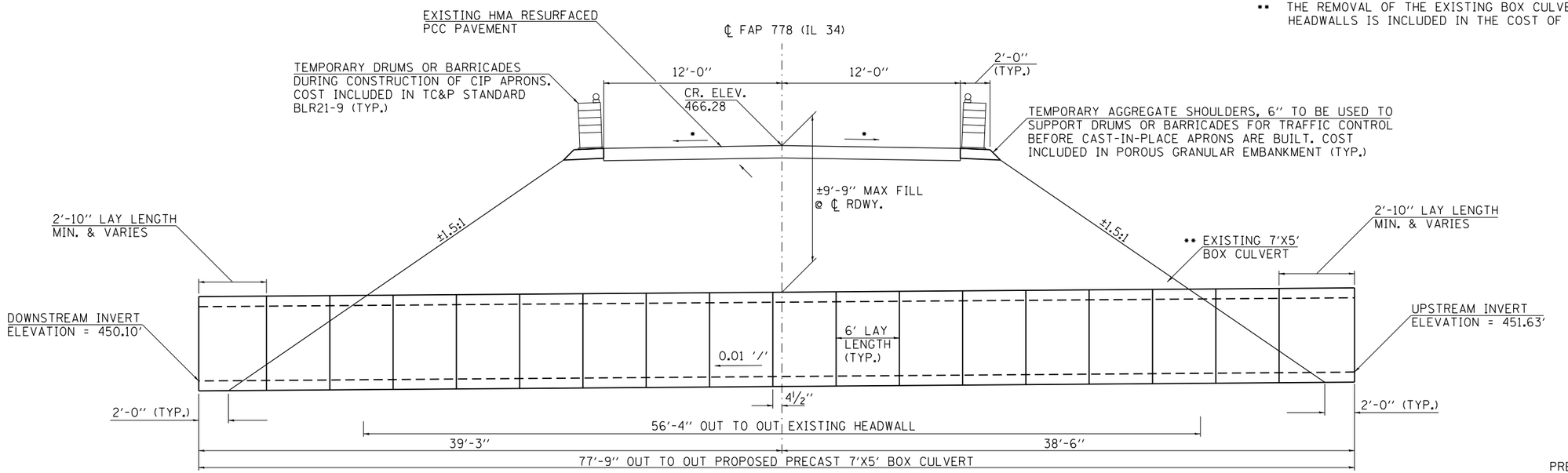

ELEVATION

(LOOKING UPSTATION)

NOTE: ALL HORIZONTAL DIMENTSIONS SHOWN @ RT. ∠'S TO ℄ IL 34.

PRECAST BOX CULVERT
LOADING HL-93
ASTM C 1577

HYDRAULIC DATA (50 YR DESIGN)

DRAINAGE AREA = 0.04 SQ MI
DRAINAGE WATERWAY OPENING = 34.1 SQ FT
DESIGN DISCHARGE = 272 CFS
DESIGN HEADWATER ELEVATION = 457.81 FT
100 YEAR DISCHARGE = 292 CFS
100 YEAR HEADWATER ELEVATION = 459.05 FT

FINAL SECTION AFTER CONSTRUCTION OF CAST-IN-PLACE APRONS

• MATCH EXISTING CROSS SLOPES

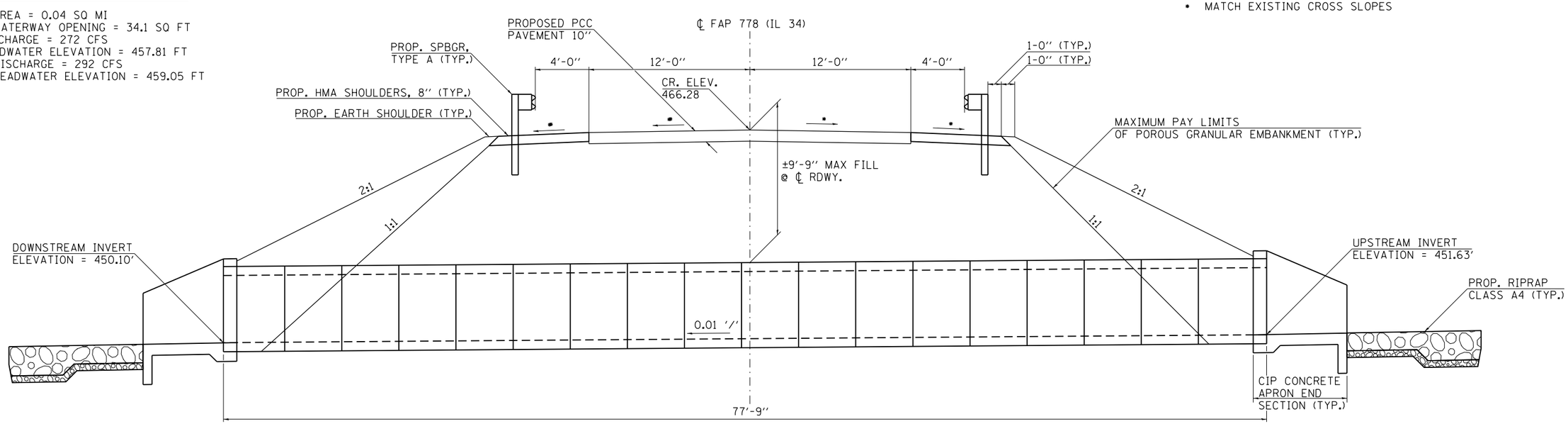

ELEVATION

(LOOKING UPSTATION)

NOTE: ALL HORIZONTAL DIMENTSIONS SHOWN @ RT. ∠'S TO ℄ IL 34.

PRECAST BOX CULVERT
LOADING HL-93
ASTM C 1577

FILE NAME = c:\pw_work\pwidot\halsteadtw\d0325547\78315-shtb-typ_sch_ties.dgn	USER NAME = halsteadtw	DESIGNED -	REVISED -	STATE OF ILLINOIS DEPARTMENT OF TRANSPORTATION	TEMPORARY AND FINAL SECTIONS	F.A.P. RTE.	SECTION	COUNTY	TOTAL SHEETS / SHEET NO.
	PLOT SCALE = 8.0000 ' / in.	CHECKED -	REVISED -			778	3B-3	POPE	25 / 11
Default	PLOT DATE = 12/5/2013	DATE -	REVISED -		SCALE: SHEET OF SHEETS STA. TO STA.	CONTRACT NO. 78315			
						ILLINOIS FED. AID PROJECT			