STATE OF ILLINOIS
DEPARTMENT OF TRANSPORTATION

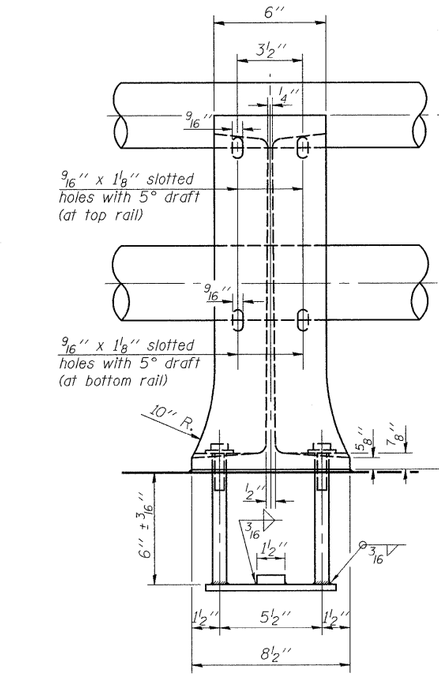

VIEW B-B

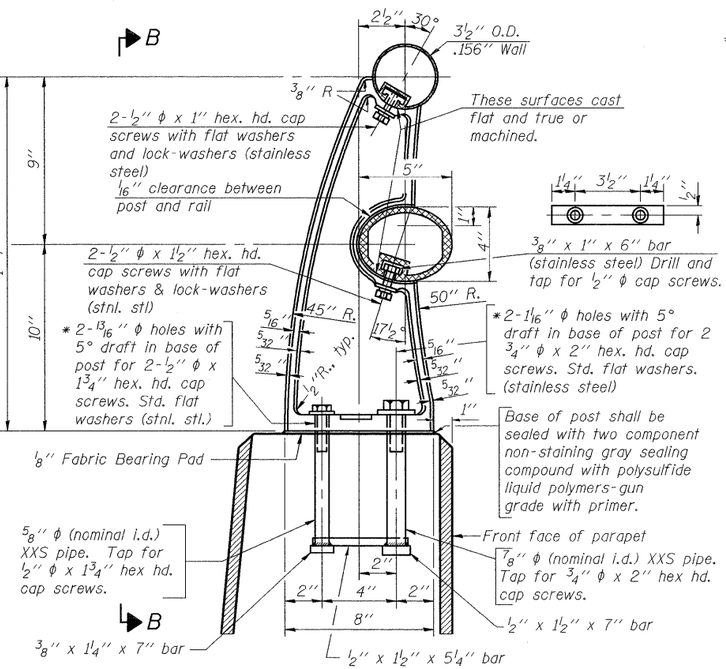

SECTION A-A

Hatched areas indicate Form Liner Textured Surface (Max. depth 1½")

* In lieu of the cast-in-place anchor device shown, the Contractor has the option of drilling and setting stainless steel anchor rods of the same diameter and grade as the specified cap screws according to Article 509.06 of the Standard Specifications. Embedment shall be according to the manufacturer's specifications.

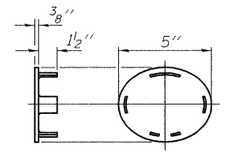

CAST END CAP

For bottom rail
DRIVE FIT TYPE

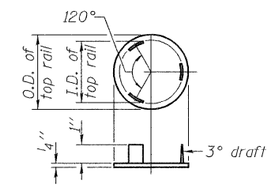

CAST END CAP

For top rail

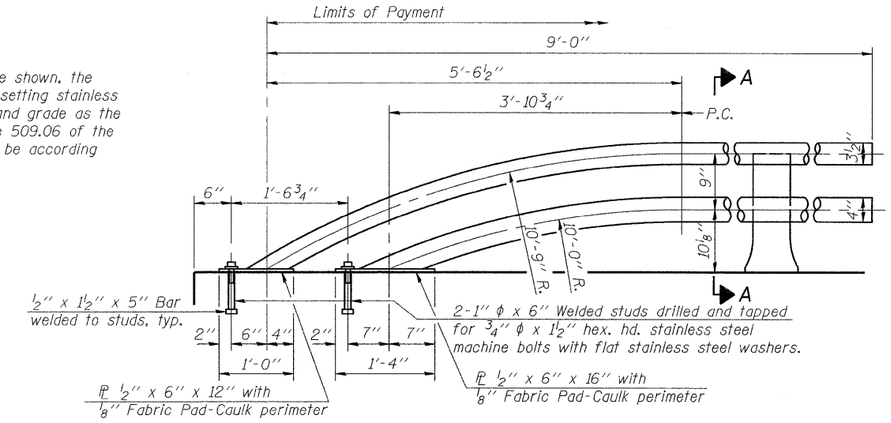

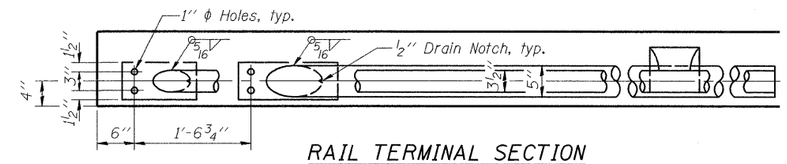

RAIL TERMINAL SECTION

Note:
The end rail post shall be set back as required for the terminal rail section.

RAIL POST DETAILS

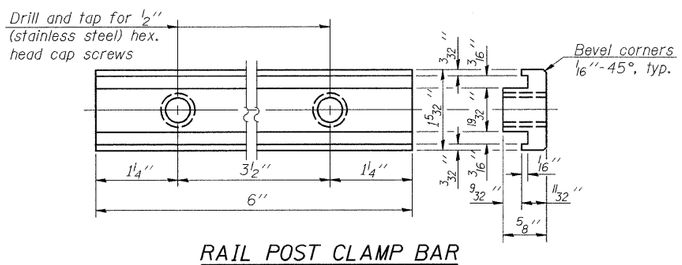

RAIL POST CLAMP BAR

For Top Rail

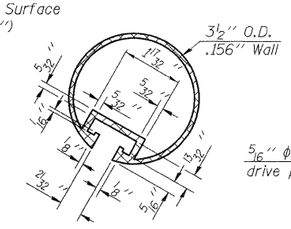

SECTION THRU TOP RAIL

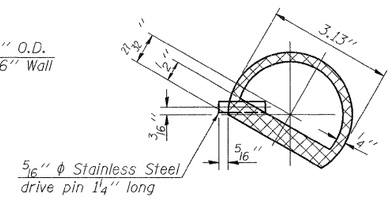

SECTION THRU SPLICE

For Top Rail

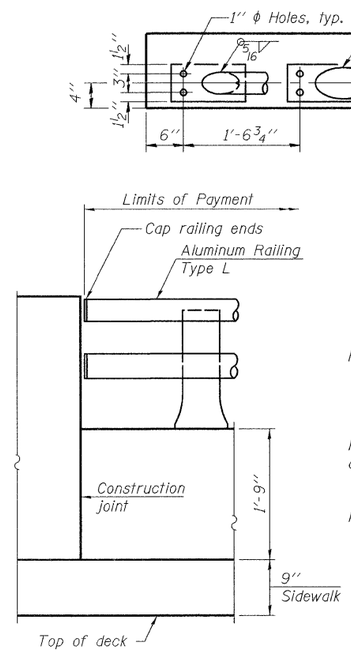

RAIL END TREATMENT FOR TYPE 5 AND 6 TERMINAL

Notes:
All Posts shall be normal to parapet.
All joints in rail shall be spliced per detail.
All exposed rail ends shall be capped per detail.
Provide 1-⅛" and 2-1/16" Aluminum Shims for 25% of the Posts. Rail elements shall be parallel to Grade-high spots will be ground and low spots shimmed.
See sheet 17 of 27 for rail post spacing.
All aluminum components shall be colored Black. See Special Provision for Aluminum Railing, Special.

BILL OF MATERIAL

Item	Unit	Quantity
Aluminum Railing, Special	Foot	300

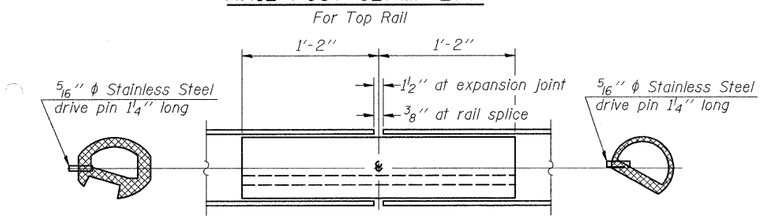

BOTTOM RAIL

RAIL SPLICE

TOP RAIL

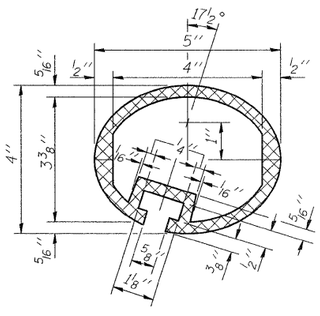

SEC. THRU ELLIPTICAL RAIL SECTION

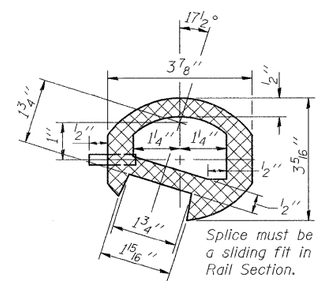

SEC. THRU SPLICE

DESIGNED	JMT
CHECKED	BLB
DRAWN	JMT
CHECKED	BLB

BRIDGE RAIL DETAILS
STRUCTURE NO. 022-0033

rjngroup
Excellence through Ownership
200 West Front Street
Wheaton, IL 60187

SHEET NO. 18
27 SHEETS

F.A.P. RTE.	SECTION	COUNTY	TOTAL SHEETS	SHEET NO.
311	10HB-R	Du Page	53	34
		CONTRACT NO. 60B92		
FED. ROAD DIST. NO. _	ILLINOIS	FED. AID PROJECT		

8/7/2009 k:\1122551\structures\Final plans\Misc Base Sheets.dgn