STATE OF ILLINOIS
DEPARTMENT OF TRANSPORTATION

Note:
All edges shall have standard $\frac{3}{4}''$ chamfers except as noted.

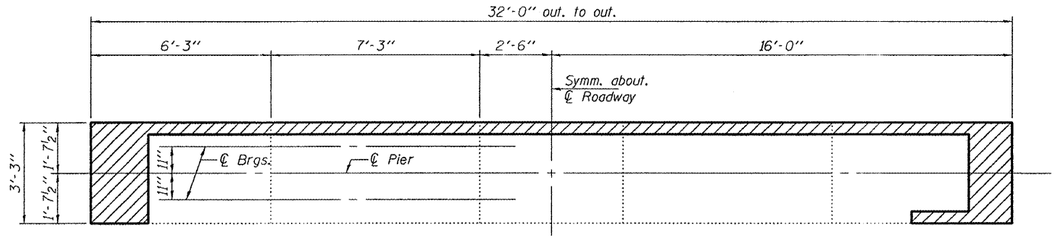

Structural Repair of Concrete ≤ 5 inches

TOP PLAN

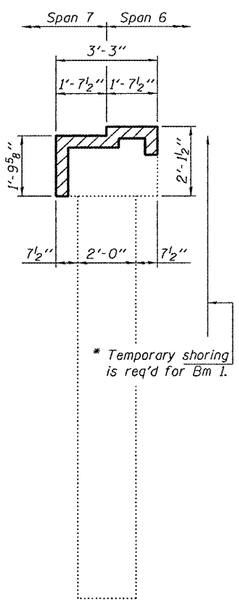

EAST END VIEW

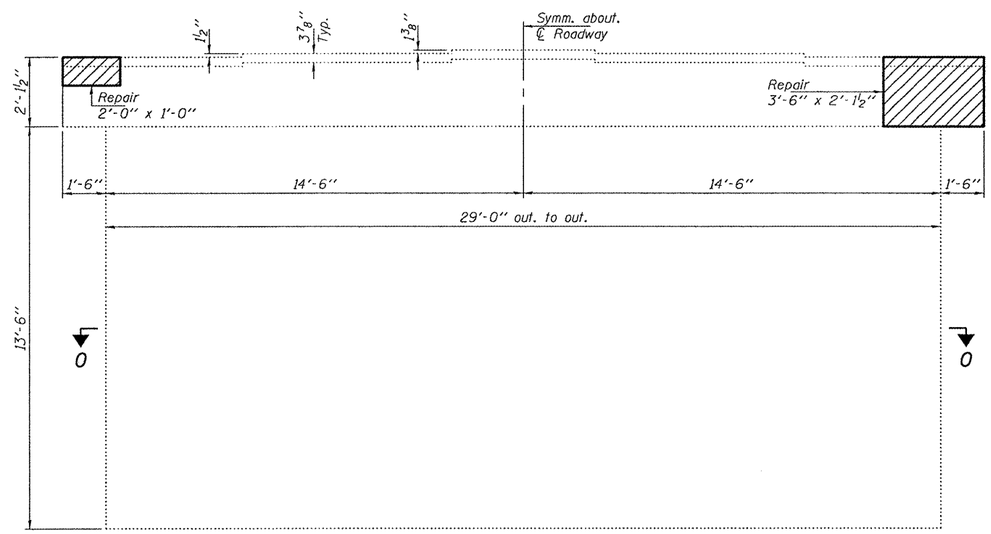

ELEVATION
(Looking South)

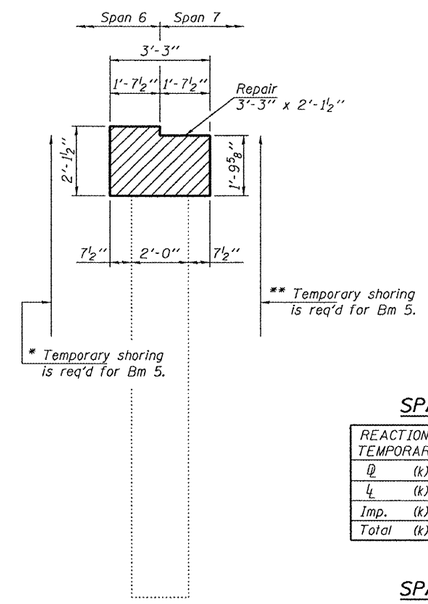

WEST END VIEW

SPAN 6

REACTION TABLE AT TEMPORARY SHORING		
DL	(k)	52.4
LL	(k)	39.8
Imp.	(k)	10.1
Total	(k)	102.3

SPAN 7

REACTION TABLE AT TEMPORARY SHORING		
DL	(k)	47.7
LL	(k)	42.6
Imp.	(k)	9.1
Total	(k)	99.4

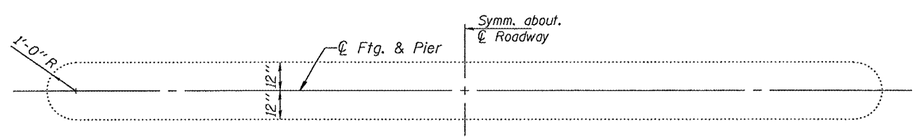

SECTION 0-0

DESIGNED	VHV
CHECKED	DAB
DRAWN	Kyle M. Steffen
CHECKED	VHV DAB

* Paid for as Temporary Shoring & Cribbing.

** Cost included with Jack & Remove Existing Bearings.

PIER 6 REPAIR DETAILS
IL ROUTE 116 OVER SPOON RIVER
SN 029-0050

F.A.P. RTE.	SECTION	COUNTY	TOTAL SHEETS	SHEET NO.
665	(142-BR)I	FULTON	25	19
		CONTRACT NO. 68925		
FED. ROAD DIST. NO.	ILLINOIS	FED. AID PROJECT		

0290050.dgn 1/13/2010 8:56:04 AM