STATE OF ILLINOIS
DEPARTMENT OF TRANSPORTATION

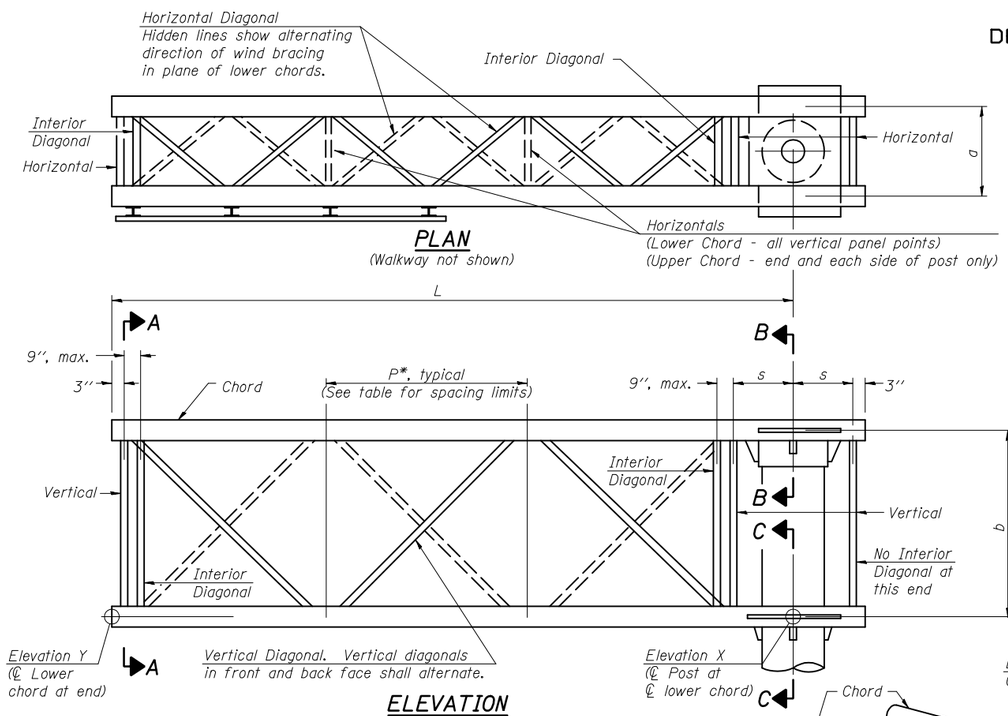


PLAN
(Walkway not shown)

ELEVATION
(Sign and walkway omitted for clarity)

TYPICAL TRUSS UNIT
For Section B-B and Section C-C, see Base Sheet OSC-A-3.

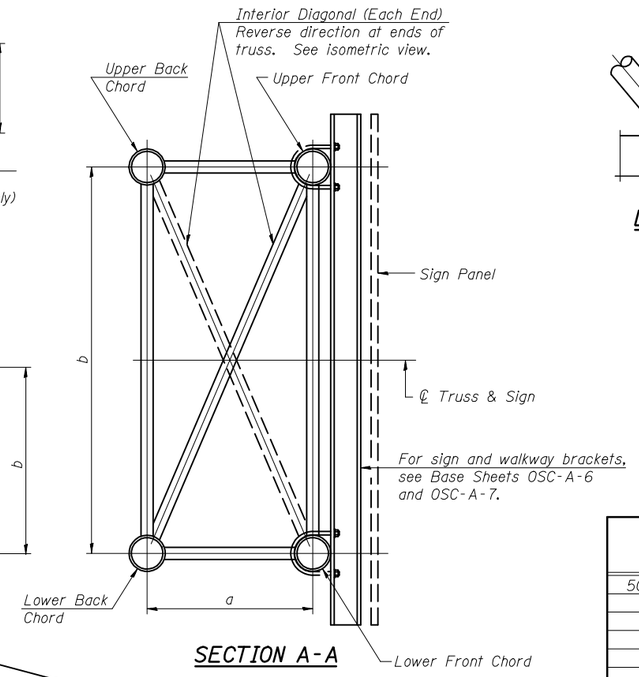


SECTION A-A

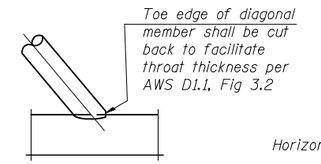


DETAIL A

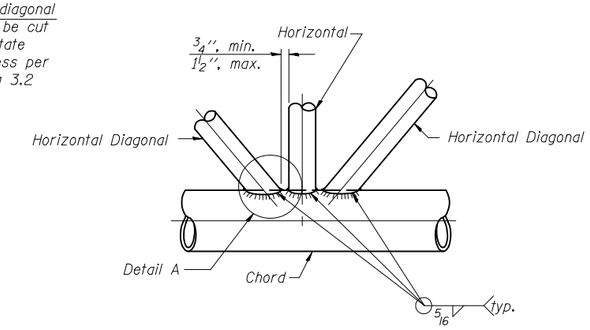


TRUSS INTERIOR JOINT DETAIL

| Structure Number | Station | Truss Type | Design Length (L) | Number of Panels Per Unit | Panel Length (P)* |
|---|---|---|---|---|---|
| 5C01I01I057R221.05 | 188+58 * | II-C-A | 30'-0" | 7 | 4'-0" |

* MOVE TRUSS 15' SOUTH OF EXISTING LOCATION

Note:
There are twice as many horizontal diagonals as there are vertical diagonals.

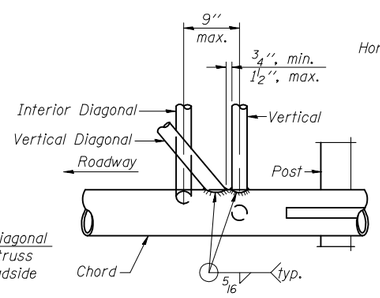


POST END JOINT DETAIL

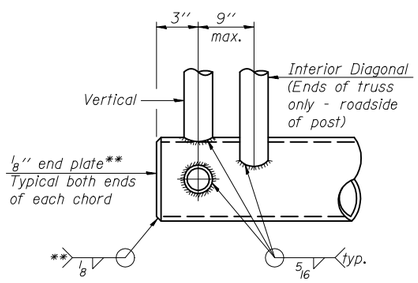


CANTILEVER END JOINT DETAIL
** Contractor may alternatively use standard aluminum drive-fit cap to close ends.

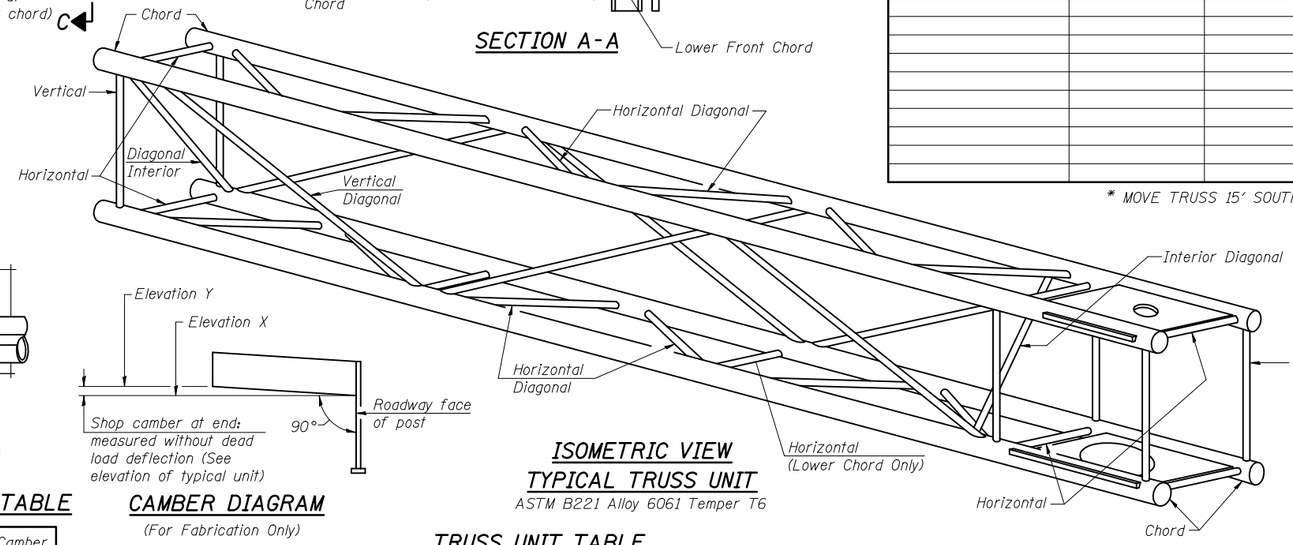


ISOMETRIC VIEW
TYPICAL TRUSS UNIT
ASTM B221 Alloy 6061 Temper T6




CAMBER DIAGRAM
(For Fabrication Only)

SHOP CAMBER TABLE

| Unit Length (L) | Shop Camber at End |
|---|---|
| 15' | 1 1/2'' |
| 16'-17' | 1 3/4'' |
| 18'-20' | 2'' |
| 21'-22' | 2 1/4'' |
| 23'-25' | 2 1/2'' |
| 26'-27' | 2 3/4'' |
| 28'-30' | 3'' |
| 31'-32' | 3 1/4'' |
| 33'-35' | 3 1/2'' |
| 36'-37' | 4'' |
| 38'-40' | 4 1/2'' |

TRUSS UNIT TABLE

| Truss Type | Dimension "a" | Dimension "b" | Dimension "s" | Limits for Panel Spacing (P)* | Up. & Low. Chord O.D. | Up. & Low. Chord Wall | Verticals; Horizontals; Vertical, Horizontal, and Interior Diagonals O.D. | Verticals; Horizontals; Vertical, Horizontal, and Interior Diagonals Wall |
|---|---|---|---|---|---|---|---|---|
| I-C-A | 24'' | 54'' | 16'' | 36'' min. to 48'' max. | 5'' | 5/16'' | 2 1/2'' | 5/16'' |
| II-C-A | 36'' | 66'' | 21'' | 42'' min. to 54'' max. | 6 1/2'' | 5/16'' | 3 1/4'' | 5/16'' |
| III-C-A (35' Max.) | 36'' | 84'' | 21'' | 48'' min. to 66'' max. | 7'' | 3/8'' | 3 1/2'' | 3/8'' |
| III-C-A (>35' to 40') | 36'' | 84'' | 21'' | 48'' min. to 66'' max. | 8'' | 3/8'' | 3 1/2'' | 3/8'' |

$*P = \frac{L-s-3''}{\#\ Panels}$

| NUMBER | REVISION | DATE |
|---|---|---|
| | | |

CANTILEVER SIGN STRUCTURES
TRUSS DETAILS
ALUMINUM TRUSS & STEEL POST

*CHAMPAIGN & DOUGLAS

| SHEET NO. 2 | F.A.I. RTE. | SECTION | COUNTY | TOTAL SHEETS | SHEET NO. |
|---|---|---|---|---|---|
| 8 SHEETS | 57 | (21-28,21-10-29,10-30)RS-1 | * | 115 | 106 |
| | | | CONTRACT NO. 70251 | | |
| | FED. ROAD DIST. NO. | ILLINOIS | FED. AID PROJECT | | |

DESIGNED -
CHECKED -
DRAWN -
CHECKED -

- 200
EXAMINED
ENGINEER OF BRIDGE DESIGN
PASSED
ENGINEER OF BRIDGES AND STRUCTURES

OSC-A-2 12-1-08