F.A.P. RTE.	SECTION	COUNTY	TOTAL SHEETS	SHEET NO.
310	60-15HB-3	MADISON	93	5
STA.		TO STA.		
FED. ROAD DIST. NO.	ILLINOIS	FED. AID PROJECT		

CONTRACT NO. 75706

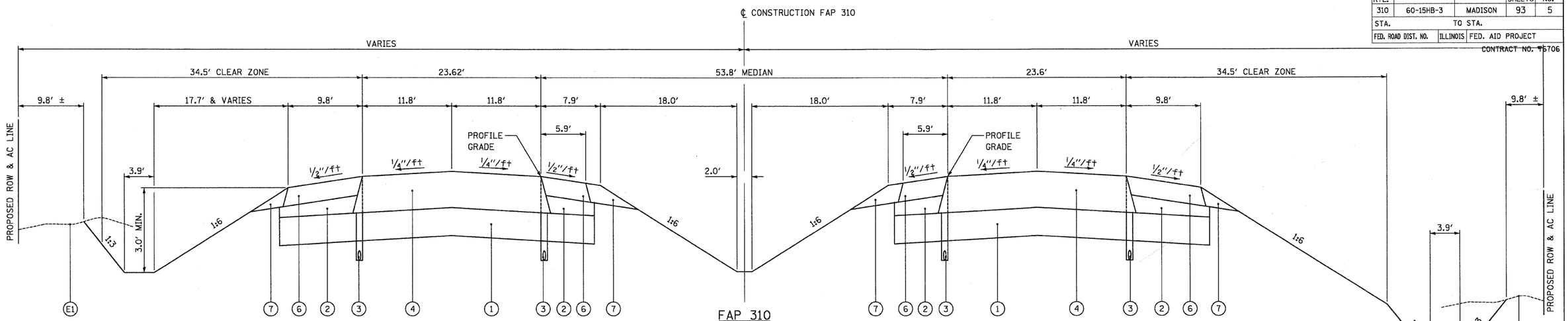

FAP 310
PROPOSED TYPICAL TANGENT SECTION (FREEWAY)

STA 88+96.92 TO STA 92+50.00

FAP 310 - TRANSITION FROM FREEWAY TO EXPRESSWAY

STA 92+50.00 TO STA 95+00.00

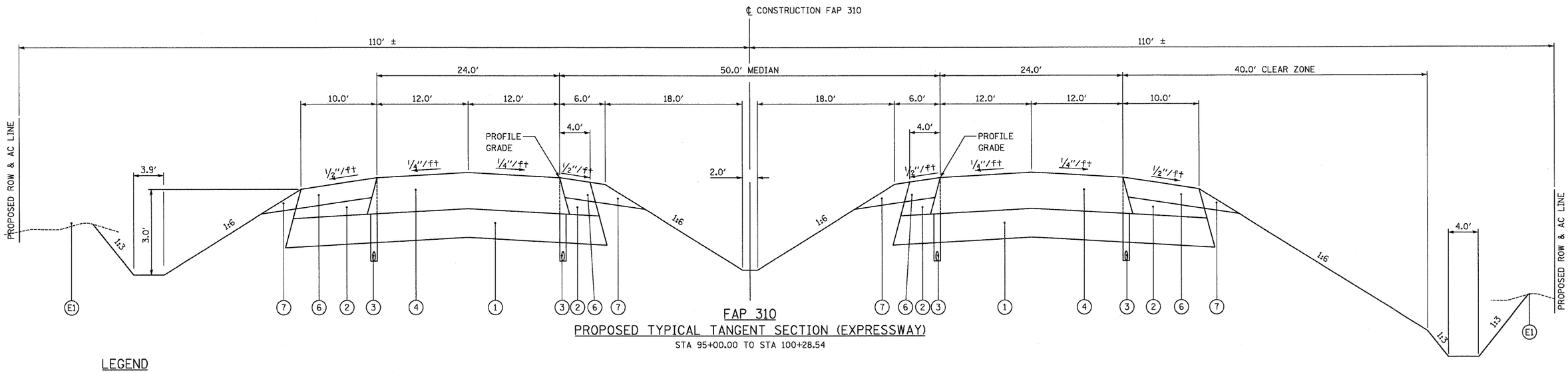

FAP 310
PROPOSED TYPICAL TANGENT SECTION (EXPRESSWAY)

STA 95+00.00 TO STA 100+28.54

LEGEND

- (E1) EXISTING GROUND
- (1) LIME MODIFIED SOIL 12"
- (2) SUBBASE GRANULAR MATERIAL, TYPE C
- (3) SUB-SURFACE DRAIN, STD 601001
- (4) HOT-MIX ASPHALT PAVEMENT (FULL-DEPTH), 15¼"
- (6) HOT-MIX ASPHALT SHOULDERS, 8"
- (7) AGGREGATE SHOULDER, TYPE B, 8"

THIS SHEET FOR INFORMATION ONLY
SECTION 60-15 BY OTHERS

FAP 310 (IL 255)

STRUCTURAL DESIGN TRAFFIC: YEAR 2014
PV = 16836 SU = 549 MU = 915
ROAD/STREET CLASSIFICATION: CLASS I
PERCENT OF STRUCTURAL DESIGN TRAFFIC IN DESIGN LANE:
P = 32 S = 45 M = 45
TRAFFIC FACTOR: ACTUAL TF = 4.64 AC TYPE = 20
MINIMUM TF = 7.11
AC GRADE: BINDER = PG 58-22 SURFACE = PG 64-22
SUBGRADE SUPPORT RATING:
SSR = POOR

REVISIONS	
NAME	DATE

ILLINOIS DEPARTMENT OF TRANSPORTATION

TYPICAL SECTIONS
FAP 310 (ILL 255)
SECTION 60-15HB-3
MADISON COUNTY

SCALE: VERT. HORIZ. DRAWN BY
DATE CHECKED BY

11/18/2020