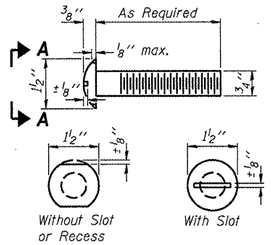

VIEW A-A ROUND HEAD BOLT

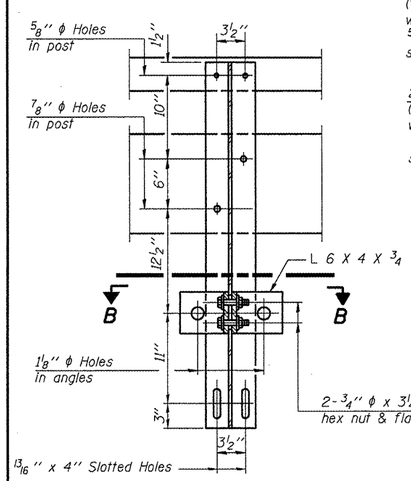

SECTION A-A

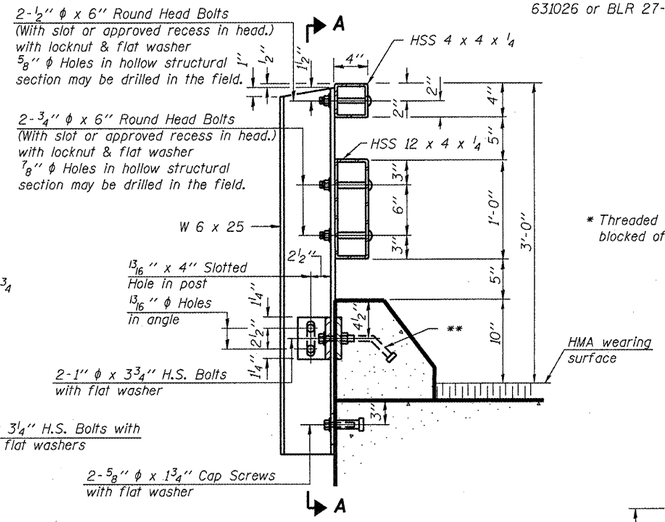

SECTION AT RAIL POST

* Threaded areas shall be plugged or blocked off during casting of beam.

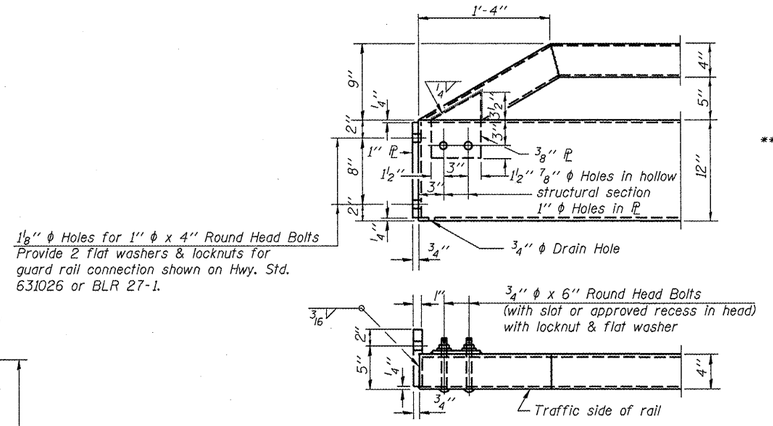

END OF RAIL DETAILS

Notes:

All field drilled holes shall be coated with an approved zinc rich paint before erection.

For multi-span bridges, sufficient 1/4" x 6" x 1'-5" galvanized steel shims shall be provided to align rail between adjacent spans. Cost included with Steel Railing, Type T-1.

All steel rail elements shall be galvanized according to Article 509.05 of the Standard Specifications.

** The studs of the anchor devices shall be placed below the top reinforcement bars and the outermost longitudinal reinforcement bar shall be placed directly above the studs of the rail post anchor device.

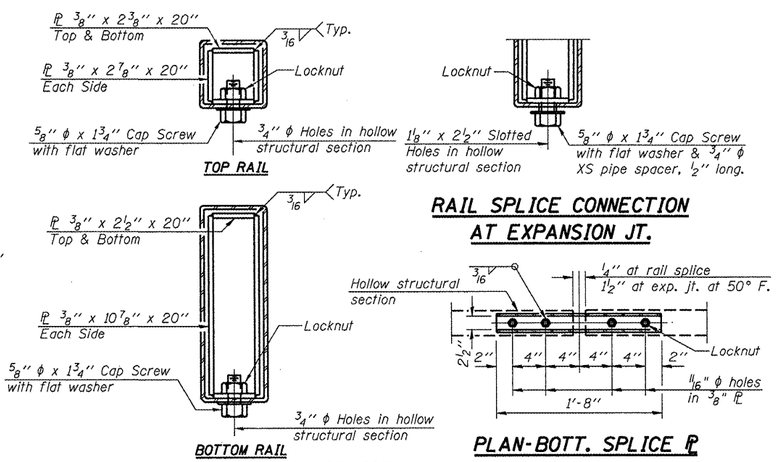

RAIL SPLICE CONNECTION AT EXPANSION JT.

SECTIONS AT RAIL SPLICE

PLAN-BOTT. SPLICE PL TYPICAL

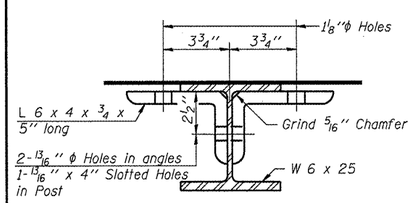

SECTION B-B

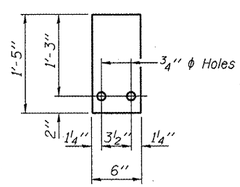

1/4" SHIM PLATE

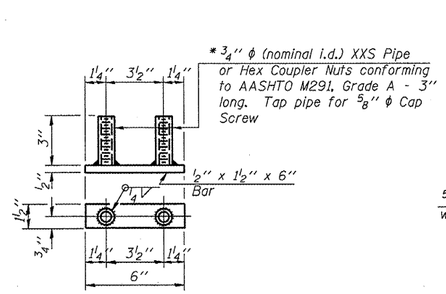

BOTTOM ANCHOR DEVICE

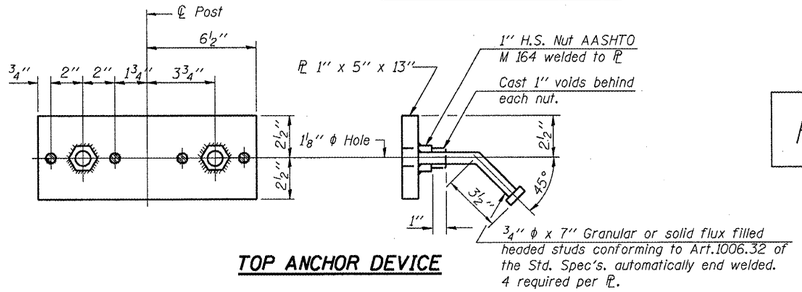

TOP ANCHOR DEVICE

BILL OF MATERIAL

Item	Unit	Quantity
Steel Railing, Type T-1	Foot	

FOR INFORMATION ONLY

R-24A 11-1-09 (9'-6" Maximum Post Spacing)

STEEL RAILING, TYPE T-1
STRUCTURE NO.
076-0001
(SHOWING ANCHOR DEVICES)

FILE NAME = c:\pw_work\PWIDOT\GAUTNEYRK\d0156602\78153-sht-pln.dgn	USER NAME = gautneyrk	DESIGNED - ___	REVISED - ___
		DRAWN - ___	REVISED - ___
	PLOT SCALE = 11:30 1/2 'x' / IN.	CHECKED - ___	REVISED - ___
	PLOT DATE = 12/9/2009	DATE - _____	REVISED - ___

STATE OF ILLINOIS
DEPARTMENT OF TRANSPORTATION

SCALE: _____ | SHEET NO. __ OF ___ SHEETS | STA. _____ TO STA. _____

F.A. RTE.	SECTION	COUNTY	TOTAL SHEETS	SHEET NO.
34	3(1:1)	POPE	17	13

CONTRACT NO. 78153

ILLINOIS FED. AID PROJECT