F.A.I. RTE.	SECTION	COUNTY	TOTAL SHEETS	SHEET NO.
57	(15,21-25HB-2)BR	DOUGLAS	65	6

CONTRACT NO. 90952

EXISTING TYPICAL CROSS SECTION

STATION 56+90.50 TO STATION 58+75.95

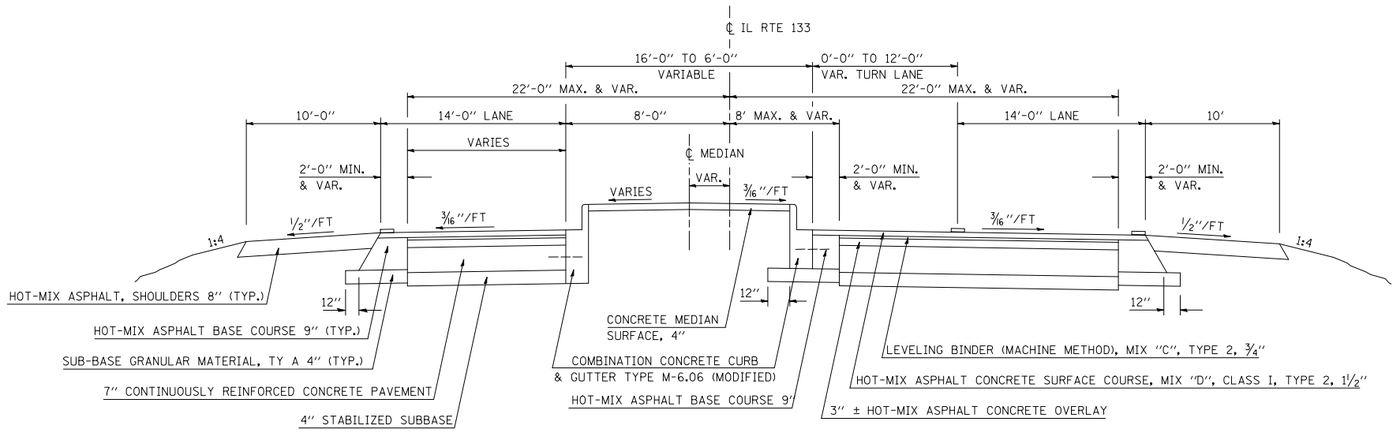

(2) PROPOSED TYPICAL CROSS SECTION

STATION (1) 56+90.50 TO STATION 58+75.95 (3)

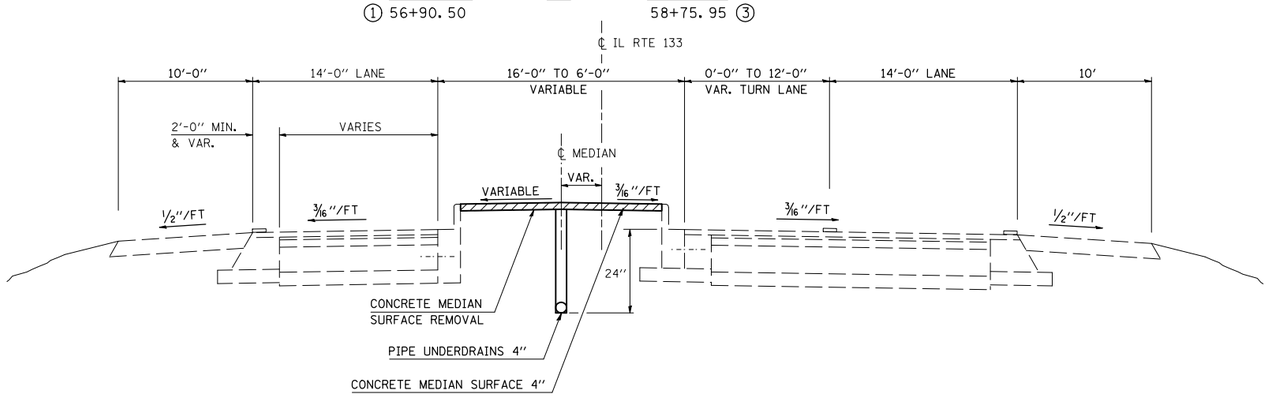

TYPICAL CROSS SECTIONS

FAI ROUTE 57
SECTION (15, 21-25HB-2)BR
DOUGLAS COUNTY

CUMMINS ENGINEERING CORPORATION

JOB #: 2114.1
FILE: 2114TYP
DATE: 2/27/07