ROUTE NO.	SECTION	COUNTY	TOTAL SHEETS	SHEET NO.
F.A.I. 57	(15,21-25HB -2)BR	DOUGLAS	65	45
FED. ROAD DIST. NO. 5	ILLINOIS	PROJECT		

Sheet 9 of 22 CONTRACT #90952

MIN. BAR LAPS

#4 Bar = 1'-8"
#5 Bar = 2'-2"
#8 Bar = 4'-6"

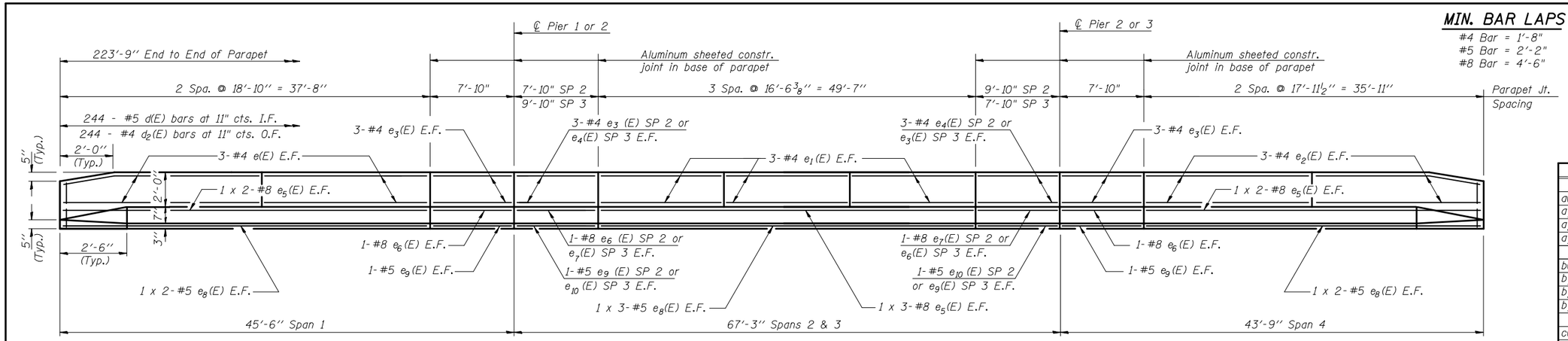

INSIDE ELEVATION OF PARAPET

I.F. = Inside Face
O.F. = Oustide Face
E.F. = Each Face

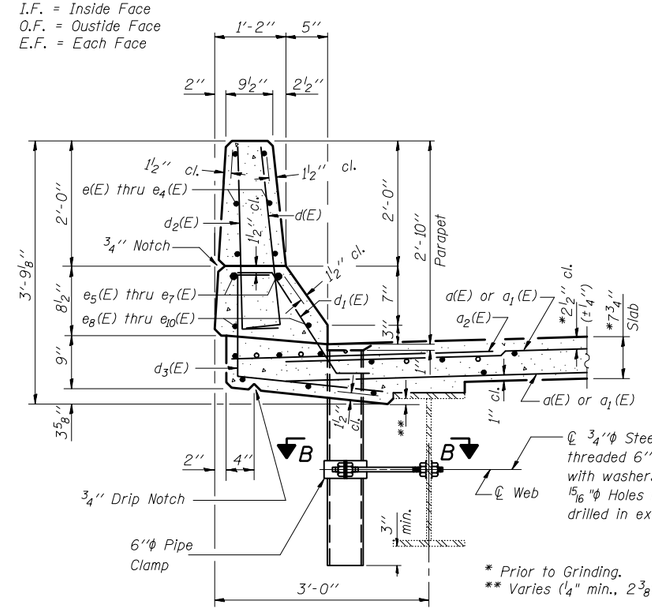

SECTION THRU PARAPET

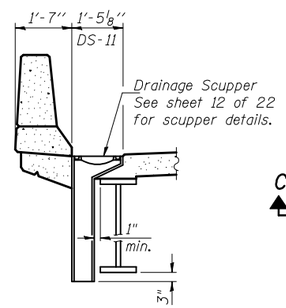

SECTION C-C

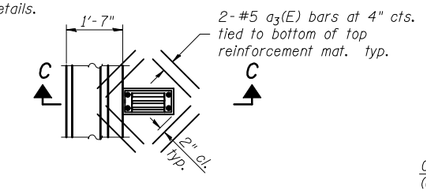

PLAN

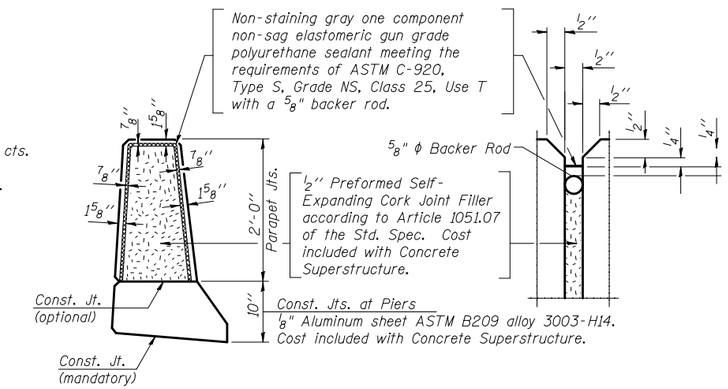

PARAPET JOINT DETAILS

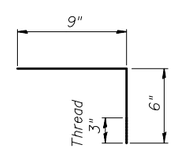

BAR c(E)

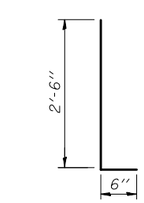

BARS d(E) & d2(E)

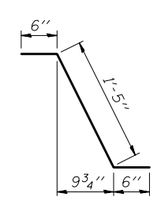

BAR d1(E)

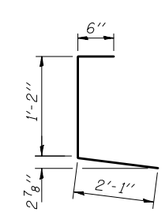

BAR d3(E)

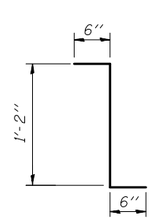

BAR d4(E)

Bar	No.	Size	Length	Shape
a(E)	648	#5	25'-0"	
a1(E)	648	#5	31'-6"	
a2(E)	382	#6	4'-6"	
a3(E)	16	#5	1'-6"	
b(E)	608	#5	29'-8"	
b1(E)	114	#6	34'-0"	
b2(E)	486	#5	26'-7"	
b3(E)	57	#6	42'-0"	
c(E)	444	#5	1'-3"	
c1(E)	222	#5	15'-6"	
d(E)	488	#5	3'-0"	
d1(E)	476	#5	2'-5"	
d2(E)	488	#4	3'-0"	
d3(E)	488	#4	3'-9"	
d4(E)	12	#5	2'-2"	
e(E)	24	#4	18'-7"	
e1(E)	72	#4	16'-3"	
e2(E)	24	#4	17'-8"	
e3(E)	48	#4	7'-7"	
e4(E)	24	#4	9'-7"	
e5(E)	40	#8	21'-0"	
e6(E)	16	#8	7'-7"	
e7(E)	8	#8	9'-7"	
e8(E)	40	#5	19'-10"	
e9(E)	16	#5	7'-7"	
e10(E)	8	#5	9'-7"	
m(E)	20	#6	25'-0"	
m1(E)	20	#6	31'-7"	
m2(E)	28	#6	6'-1"	
m3(E)	16	#6	2'-6"	
m4(E)	36	#6	9'-2"	
s(E)	216	#5	7'-11"	
s1(E)	144	#5	7'-7"	
u(E)	116	#5	3'-9"	
v(E)	110	#5	3'-6"	
Reinforcement Bars, Epoxy Coated			Pound	103,485
Concrete Superstructure			Cu. Yd.	487.9
Bar Splicers			Each	784
Floor Drains			Each	8

SUPERSTRUCTURE BILL OF MATERIAL

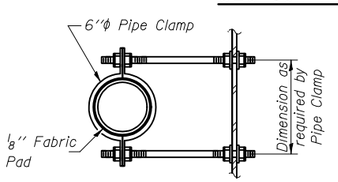

SECTION B-B

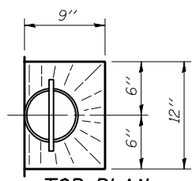

TOP PLAN

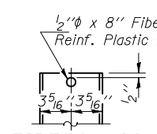

FIBERGLASS PIPE

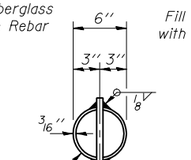

TOP PLAN

(Showing Aluminum Tube)

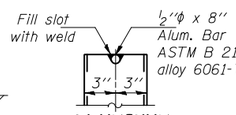

ALUMINUM TUBE

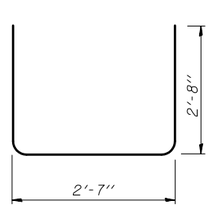

BAR s(E)

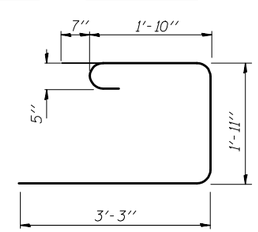

BAR s1(E)

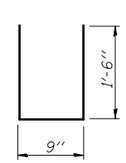

BAR u(E)

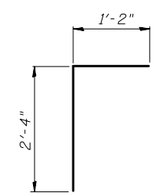

BAR v(E)

Bars indicated thus 1 x 3-#5 etc. indicates 1 line of bars with 3 lengths per line.

Notes: The exterior surfaces of the floor drains shall be painted with the finish coat as specified in the special provisions for Cleaning and Painting New Metal Structures. The exterior surfaces of the drains shall be cleaned according to Steel Structures Painting Council's Spec. SSPC-SP1 prior to painting.

Fiberglass pipe shall conform to ASTM D 2996, with short-time rupture strength hoop tensile stress of 30,000 p.s.i. minimum.

DESIGNED	Ruben V. Boehler
CHECKED	Tim S. Howard
DRAWN	Nicole L. Darling
CHECKED	Michael D. Cummins

S-1-D 9-01-03

SUPERSTRUCTURE DETAILS

IL ROUTE 133 OVER I-57
F.A.I. ROUTE 57 SECTION (15,21-25HB-2)BR
DOUGLAS COUNTY
STA. 1492+76.53
S.N. 021-0024

CUMMINS ENGINEERING CORPORATION

JOB #: 2114
FILE: 2114SUPER
DATE: 10/24/06