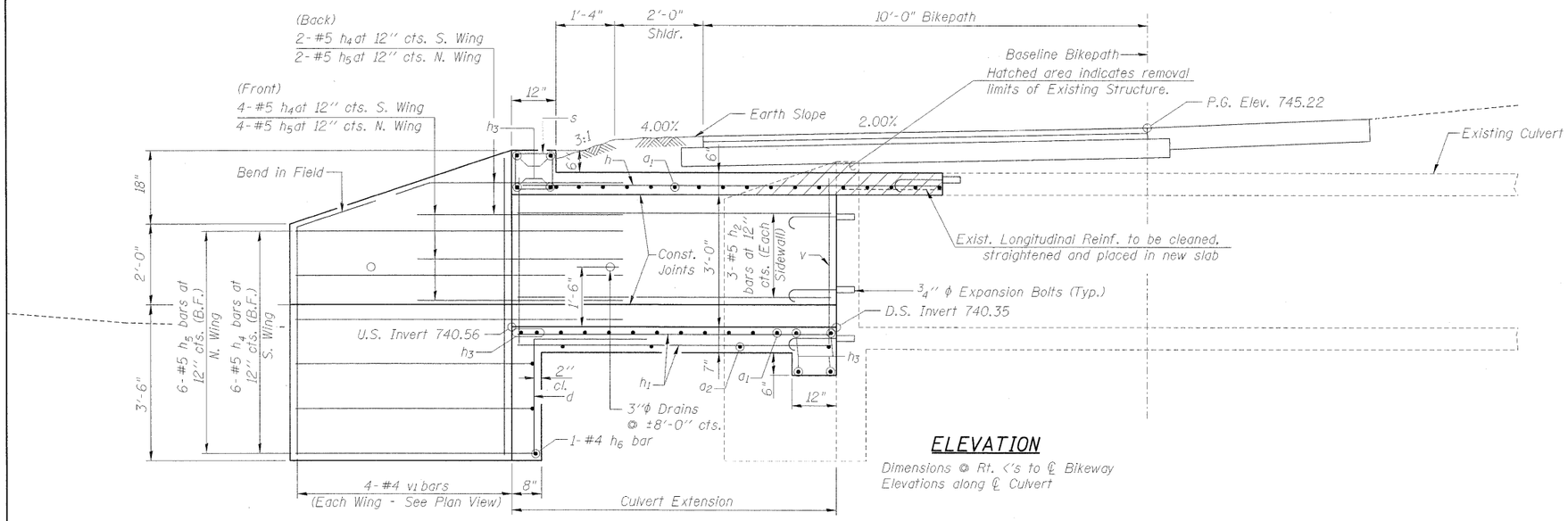

ELEVATION

Dimensions @ Rt. ∠'s to ℄ Bikeway
Elevations along ℄ Culvert

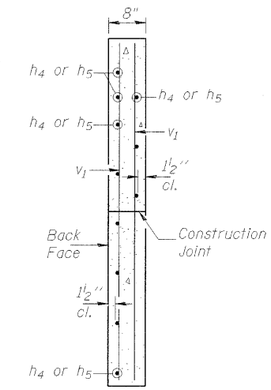

SECTION A-A

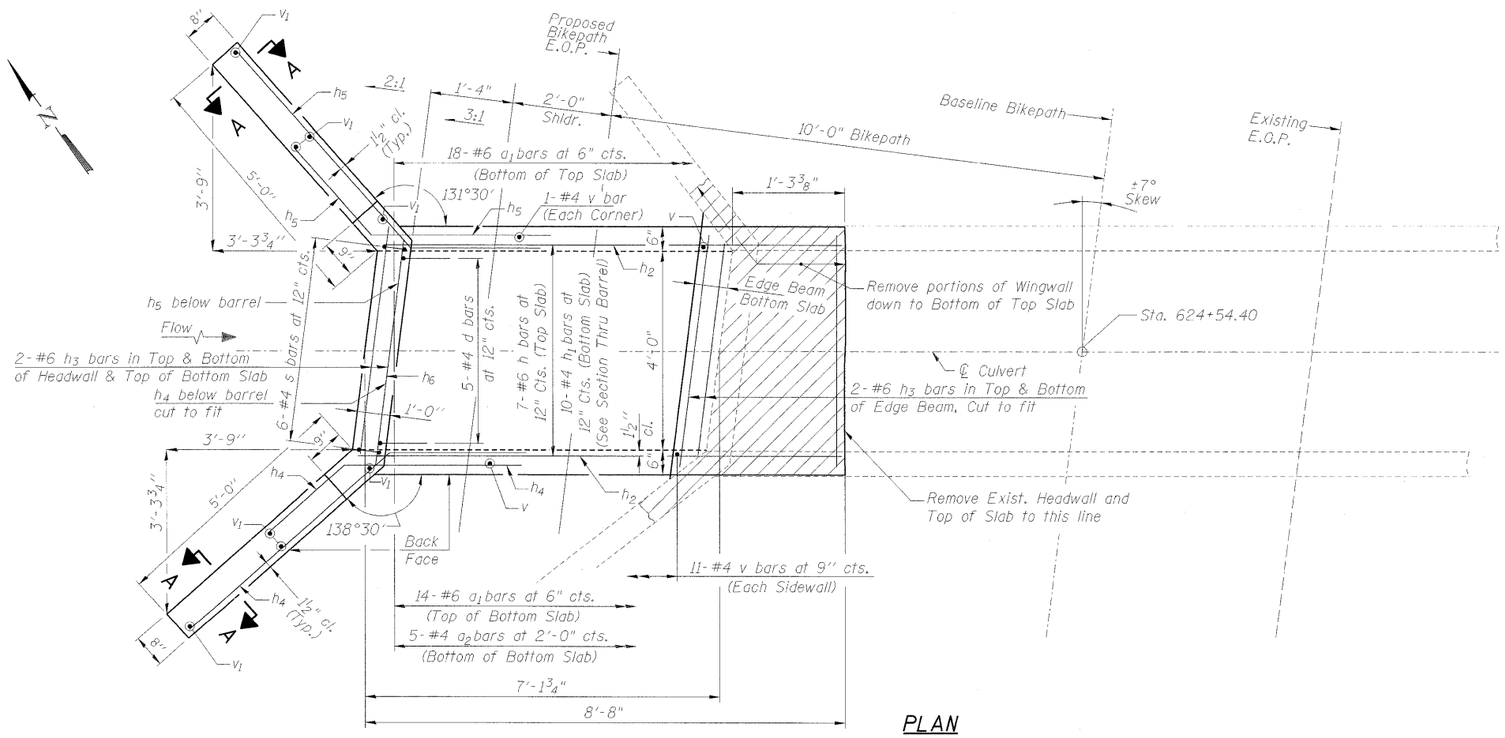

PLAN

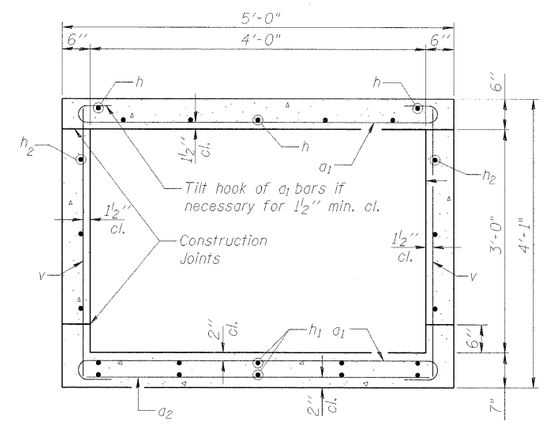

SECTION THRU BARREL

DESIGN STRESSES

FIELD UNITS

f'c = 3,500 psi
fy = 60,000 psi (reinf.)

LOADING HS20-44

Notes:
Field verify all dimensions and elevations in field.

FILE NAME = I:\01jobs\0152024A\CADD\Road\Sheet\C-508A_Culv_Ext_Det.dgn	USER NAME = Hayan0095	DESIGNED - BWC	REVISED -	STATE OF ILLINOIS DEPARTMENT OF TRANSPORTATION	STATION 624+54.40 3 X 4 BOX CULVERT EXTENSION DETAILS	F.A. RTE.	SECTION	COUNTY	TOTAL SHEETS / SHEET NO.
		DRAWN - JAP	REVISED -				01-00001-01-BT	MCLEAN	50 / 36
	PLOT SCALE = 3.0000 ' / in.	CHECKED - BWC	REVISED -				C-95-301-10	CONTRACT NO. 91429	
	PLOT DATE = 11\19\2009	DATE - 11/03/2009	REVISED -		SCALE: N.T.S. SHEET NO. 1 OF 2 SHEETS STA. TO STA.		ILLINOIS FED. AID PROJECT		