CONTRACT NO. 99383

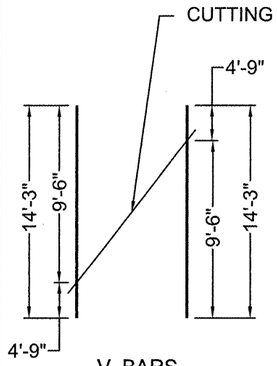

V_1 BARS
CUTTING DIAGRAM
NO SCALE

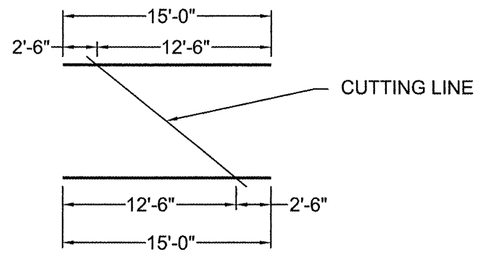

h_4 BARS
CUTTING DIAGRAM
NO SCALE

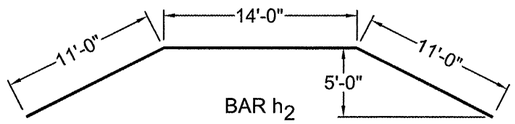

BAR h_2
NO SCALE

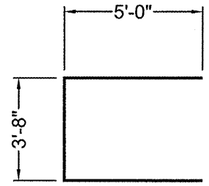

BAR U
NO SCALE

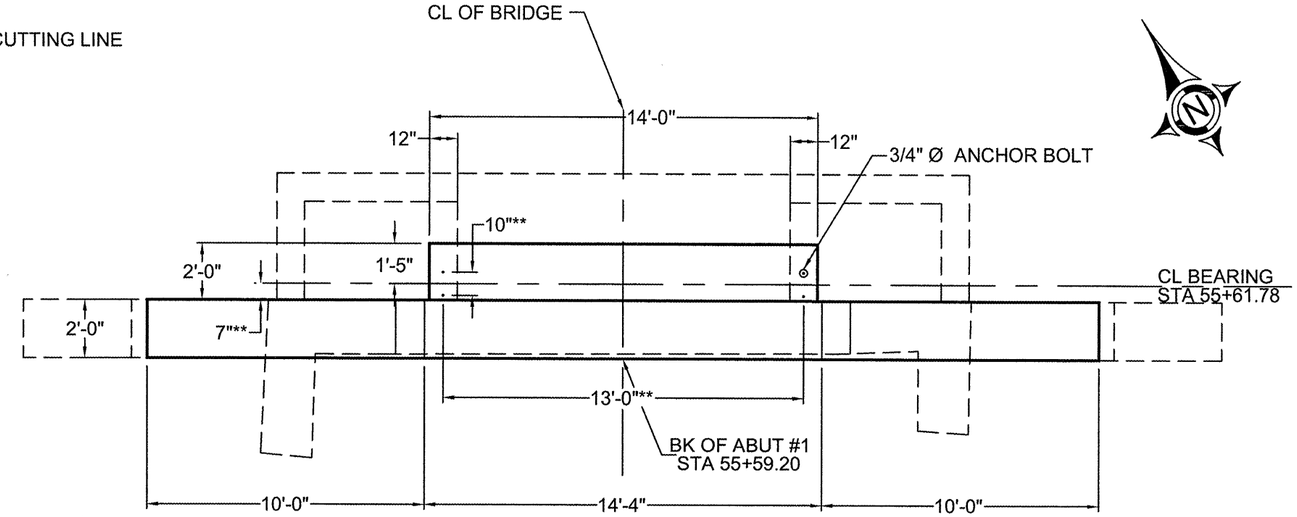

ABUTMENT #1 PLAN

* BARS TO BE DRILLED & EPOXY GROUTED 9" INTO EXISTING CONC.

** TO BE VERIFIED BY BRIDGE SUPPLIER

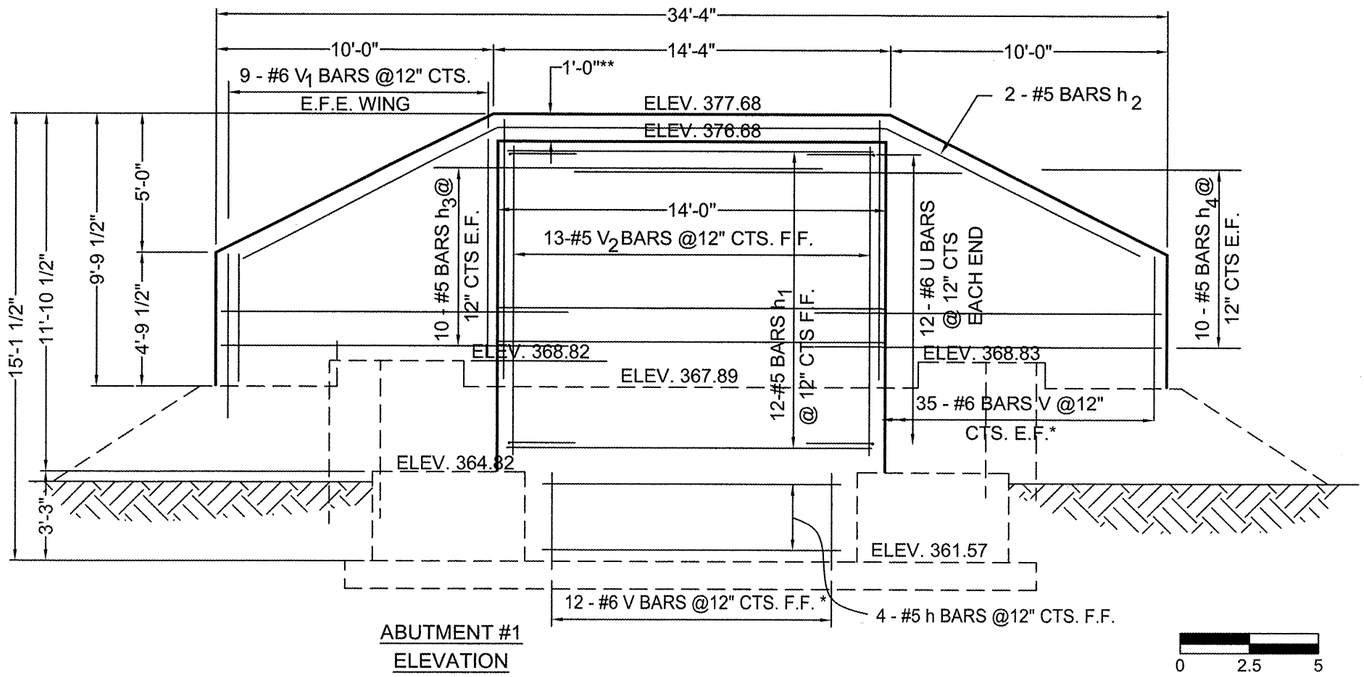

ABUTMENT #1
ELEVATION

0 2.5 5

BILL OF MATERIAL FOR ABUTMENT #1

Bar	No.	Size	Length	Shape
h	4	#5	11'-8"	
h_1	12	#5	13'-8"	
h_2	2	#5	36'-0"	
h_3	20	#5	14'-0"	
h_4	20	#5	15'-0"	
u	24	#6	13'-8"	
v	82	#6	3'-9"	
v_1	18	#6	14'-3"	
v_2	13	#5	11'-6"	
Concrete Structures			36.9 Cu. Yds.	
Reinforcement Bars			2400 Lbs.	

BROWN AND ROBERTS, INC.
CONSULTING ENGINEERS & LAND SURVEYORS
1 WEST RIDGE ROAD HARRISBURG, IL. 62946 (618) 252-8111

SECTION 06-00082-00-BT
ABUTMENT #1 DETAILS
STATION 55+61.78

Drawn By:	Checked By:
GSS	MWR

Revisions

Item	Date	By

Scale:	Field Bk:
AS SHOWN	
Job Number: 05-138	Date: 12/08

Sheet 103 of 115