ROUTE NO.	SECTION	COUNTY	TOTAL SHEETS	SHEET NO.
F.A.U. 6757 (U.S. 150)	(105B)BR-2	TAZEWELL	133	59
FED. ROAD DIST. NO. 7		ILLINOIS	FED. AID PROJECT-	

SHEET NO. 9
18 SHEETS

CONTRACT NO. 68086

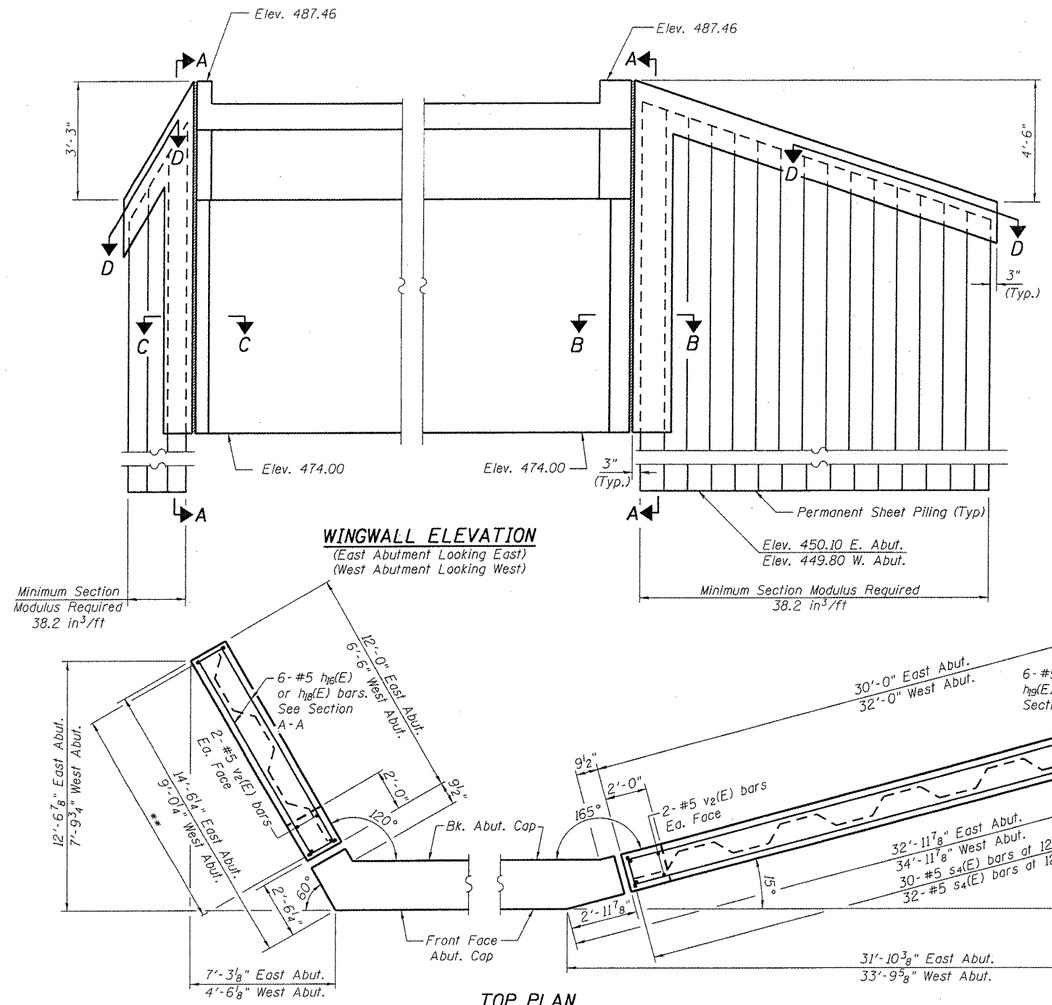

WINGWALL ELEVATION
(East Abutment Looking East)
(West Abutment Looking West)

TOP PLAN

** 12-#5 s4(E) bars at 12" cts. East Abut.
7-#5 s4(E) bars at 12" cts. West Abut.

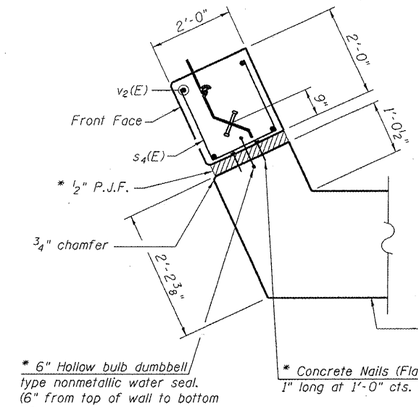

SECTION C-C

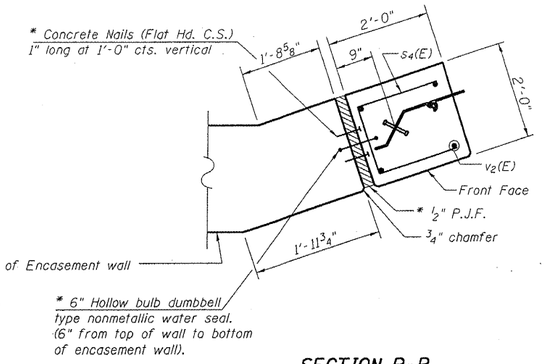

SECTION B-B

* Included in the cost of "Permanent Steel Sheet Piling."

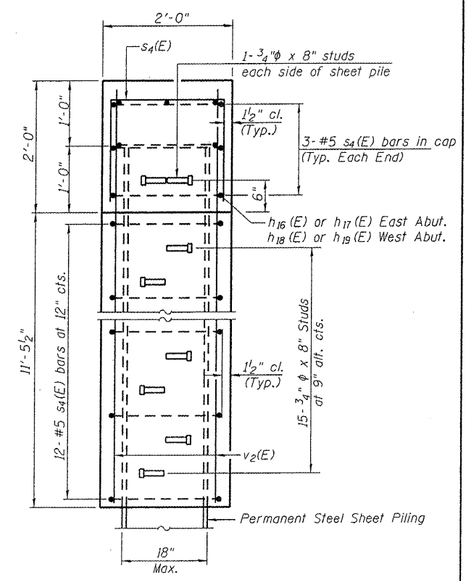

SECTION A-A

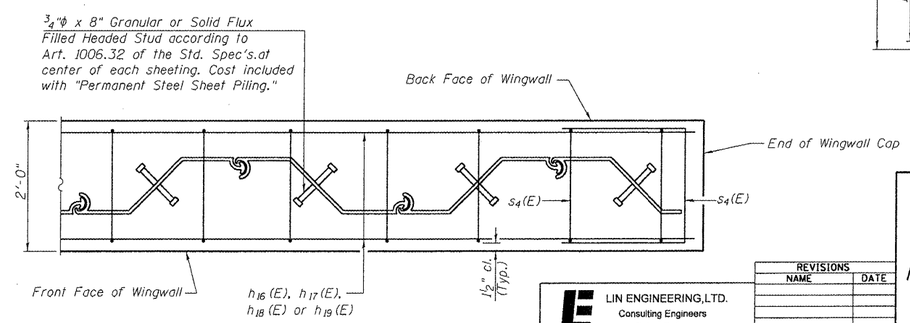

SECTION D-D

Notes:
1. Bars $s_4(E)$, $v_2(E)$, $h_{16}(E)$, $h_{17}(E)$, $h_{18}(E)$, and $h_{19}(E)$ are billed with Abutments on sheet 8 of 18.
2. The quantity for Concrete cap and end post are included with Concrete Structures on sheet 8 of 18.
3. Hard driving may be encountered during the sheet piling installation. The Contractor shall provide the appropriate driving equipment for the soil conditions indicated on the boring logs.
4. Permanent Steel Sheet Piling shall have a minimum yield strength of 50 ksi.

LIN ENGINEERING, LTD.
Consulting Engineers
Chatham, Illinois

Designed By: RKM | Checked By: MTH | Drawn By: ADB
Date: 08/2007 | File: 090-0175.DGN

REVISIONS	
NAME	DATE

ILLINOIS DEPARTMENT OF TRANSPORTATION

STEEL SHEET PILING WINGWALLS
U.S. ROUTE 150 OVER
LITTLE FARM CREEK
F.A.U. ROUTE 6757 SECTION (105B)BR-2
TAZEWELL COUNTY
STA. 49+20.43
S.N. 090-0175

$FILEABBREV$
$TIME$
$DATE$