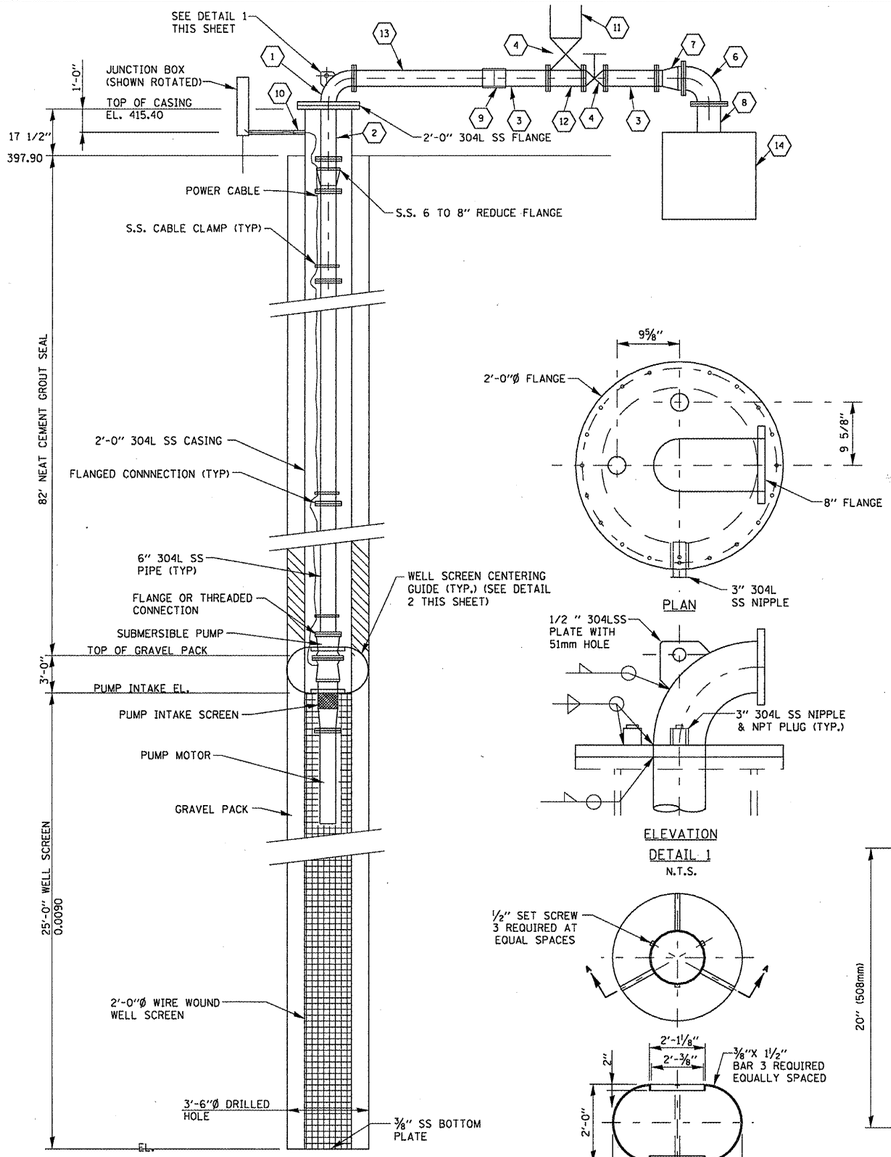

SECTION THRU WELL NO.3A
N.T.S.

ELEVATION
DETAIL 1
N.T.S.

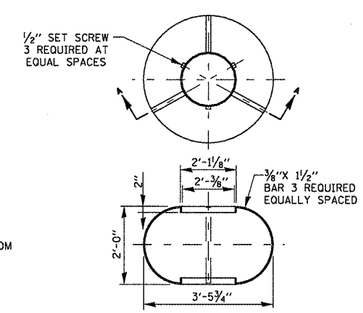

SECTION A-A
DETAIL 2
N.T.S.

WELL SCREEN CENTERING GUIDE

LEGEND

1. NEW 8" 304 L SS 90° ELBOW W/2'-0" FLANGE AND 8" FLANGE
2. NEW 8" 304 L SS PIPE FLANGE
3. NEW 8" 304 L SS PIPE, FLANGE x PE
4. NEW 8" KNIFE GATE VALVE.
5. EXISTING 8" 304 L SS TEE, FLANGE
6. EXISTING 1'-0" 304 L SS 90° ELBOW FLANGED.
7. EXISTING 8"X1-0" 304 L SS REDUCER, FLANGED
8. EXISTING 1'-0" 304 L SS PIPE, FLANGED
9. NEW S.S COUPLING, 8"X1'-0 1/2"
10. NEW 3" 304 L SS NIPPLE. WELD TO CASING (SHOWN ROTATED) ORIENT PER ELECTRICAL DRAWINGS.
11. NEW 8" HDPE
12. NEW 8" 304 L S.S. T REUSE
13. EXISTING 8" S.S. PIPE
14. EXISTING CONCRETE THRUST BLOCK

NOTE:
ALL NUTS, BOLTS & WASHERS SHALL BE 304 STAINLESS STEEL.

ALSO PIPES TO BE ALL STAINLESS STEEL

NOTE PUMP INTAKE IS AT 84'

ALL BOLTS & NUTS TO BE ALL STAINLESS STEEL

CONTRACTOR WILL VERIFY ALL DIMENTIONS ON ALL PIPES

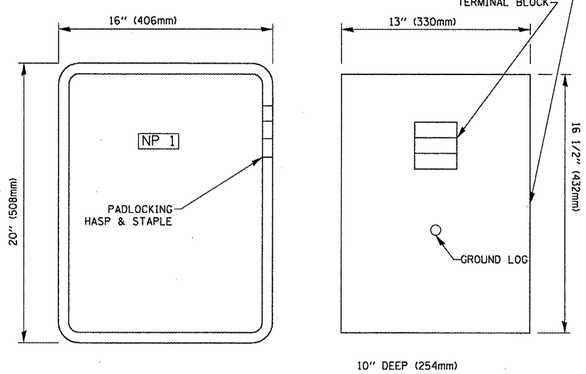

DESCRIPTION
NEMA 4X ENCLOSURE PANEL
TERMINAL BLOCK

NAME PLATES
NP1 PUMP #2
NP2 PUMP #3
NP3 PUMP #4

NEW JUNCTION BOX DETAIL

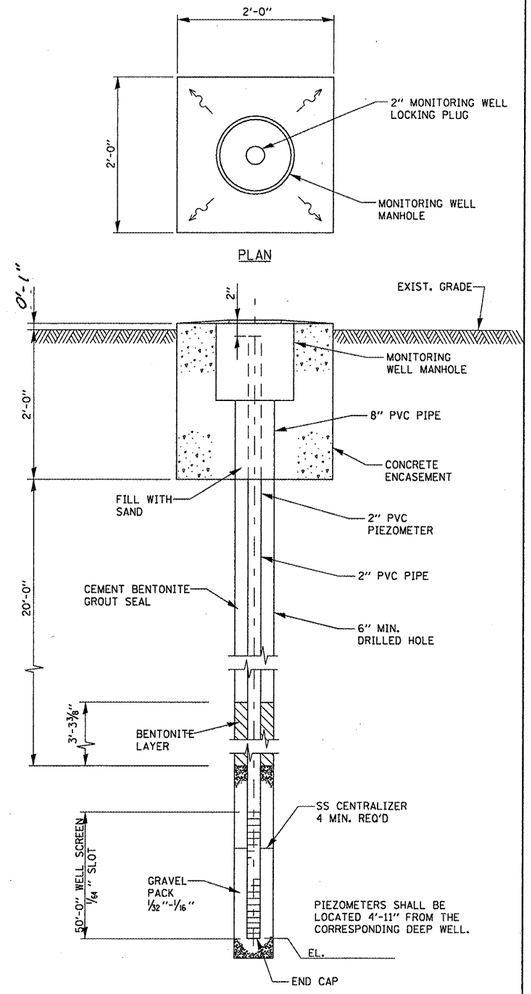

PROFILE
DETAIL OF NEW PIEZOMETER
N.T.S.

Rev.

* VARIOUS ROUTES
** DISTRICT 8 DEEP WELLS 2009-2

FILE NAME = $FILEL$	USER NAME = $USER$	DESIGNED - ___	REVISED - ___	STATE OF ILLINOIS DEPARTMENT OF TRANSPORTATION	VARIOUS ROUTES TYPICAL WELL DETAILS	F.A. RTE.	SECTION	COUNTY	TOTAL SHEETS	SHEET NO.
		DRAWN - ___	REVISED - ___			*	**	ST. CLAIR	7	5
	PLOT SCALE = $SCALE$	CHECKED - ___	REVISED - ___					CONTRACT NO. 76C71		
	PLOT DATE = $DATE$	DATE - _____	REVISED - ___		SCALE: _____ SHEET NO. __ OF ___ SHEETS STA. _____ TO STA. _____	FED. ROAD DIST. NO. _	ILLINOIS	FED. AID PROJECT		