F.A.U. RTE.	SECTION	COUNTY	TOTAL SHEETS	SHEET NO.
8899	05-00026-01-RP	MADISON	81	42
FED. ROAD DIST. NO. _	ILLINOIS	FED. AID PROJECT		

CONTRACT NO. 97368

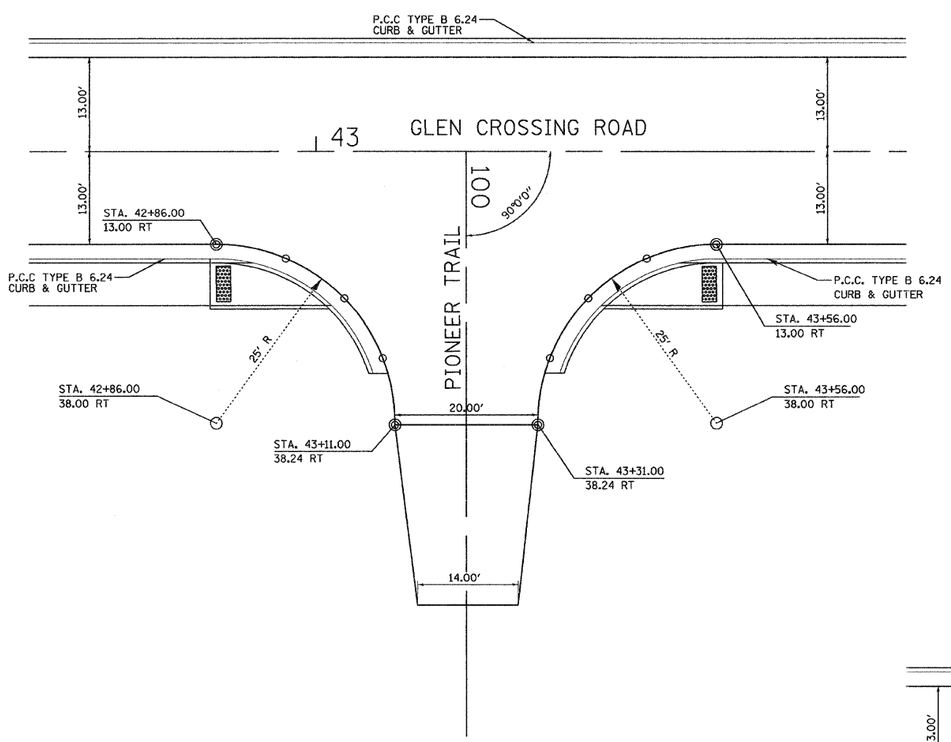

S.W. QUADRANT

STATIONING ALONG GLEN CROSSING	OFFSET TO E.O.P.	E.O.P. ELEVATION	STATIONING ALONG PIONEER LANE	OFFSET TO E.O.P.	DISTANCE ALONG RAD.
	FOOT	FOOT		FOOT	FOOT
STA. 42+86.00	13.00 RT	578.65	STA. 100+13.00	35.00 RT	0.000
STA. 42+95.75	14.97 RT	578.52	STA. 100+14.97	25.26 RT	10.00
STA. 43+03.93	20.58 RT	578.56	STA. 100+20.58	17.07 RT	20.00
STA. 43+09.30	28.94 RT	578.75	STA. 100+28.94	11.70 RT	30.00
STA. 43+11.00	38.24 RT	578.93	STA. 100+38.24	10.00 RT	39.03

S.E. QUADRANT

STATIONING ALONG GLEN CROSSING	OFFSET TO E.O.P.	E.O.P. ELEVATION	STATIONING ALONG PIONEER LANE	OFFSET TO E.O.P.	DISTANCE ALONG RAD.
	FOOT	FOOT		FOOT	FOOT
STA. 43+56.00	13.00 RT	579.02	STA. 100+13.00	35.00 LT	0.000
STA. 43+46.27	14.97 RT	578.70	STA. 100+14.97	25.26 LT	10.00
STA. 43+38.07	20.58 RT	578.75	STA. 100+20.58	17.07 LT	20.00
STA. 43+32.70	28.94 RT	578.84	STA. 100+28.94	11.70 LT	30.00
STA. 43+31.00	38.24 RT	578.93	STA. 100+38.24	10.00 LT	39.50

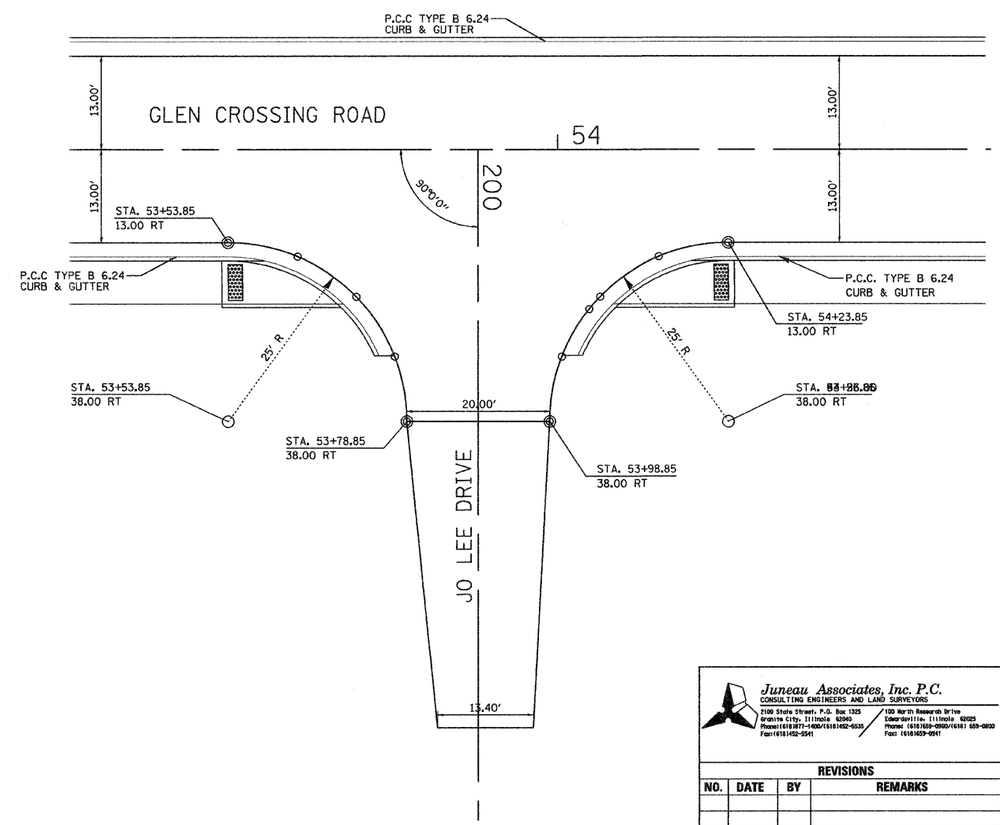

0 10 20
SCALE

S.W. QUADRANT

STATIONING ALONG GLEN CROSSING	OFFSET TO E.O.P.	E.O.P. ELEVATION	STATIONING ALONG JO LEE DRIVE	OFFSET TO E.O.P.	DISTANCE ALONG RAD.
	FOOT	FOOT		FOOT	FOOT
STA. 53+53.85	13.00 RT	590.25	STA. 200+13.00	35.00 RT	0.000
STA. 53+63.59	14.97 RT	590.41	STA. 200+14.97	25.26 RT	10.00
STA. 53+71.78	20.58 RT	590.57	STA. 200+20.58	17.07 RT	20.00
STA. 53+77.15	28.94 RT	590.73	STA. 200+28.94	11.70 RT	30.00
STA. 53+78.85	38.00 RT	590.89	STA. 200+38.00	10.00 RT	39.27

S.E. QUADRANT

STATIONING ALONG GLEN CROSSING	OFFSET TO E.O.P.	E.O.P. ELEVATION	STATIONING ALONG JO LEE DRIVE	OFFSET TO E.O.P.	DISTANCE ALONG RAD.
	FOOT	FOOT		FOOT	FOOT
STA. 54+23.85	13.00 RT	591.70	STA. 200+13.00	35.00 LT	0.000
STA. 54+14.11	14.97 RT	591.35	STA. 200+25.26	25.26 LT	10.00
STA. 54+05.91	20.58 RT	591.04	STA. 200+20.58	17.07 LT	20.00
STA. 54+04.36	22.33' RT	591.00	STA. 200+22.33	15.52 LT	22.33
STA. 54+00.55	28.94 RT	591.15	STA. 200+28.94	11.70 LT	30.00
STA. 53+98.85	38.00 RT	591.29	STA. 200+38.00	10.00 LT	39.27

FINAL SURVEY	BY	DATE
SURVEYED		
PLOTTED		
TEMPLATE		
AREAS		
AREAS CHECKED		
NOTE BOOK NO.		

ORIGINAL SURVEY	BY	DATE
SURVEYED		
PLOTTED		
TEMPLATE		
NOTE BOOK		

Juneau Associates, Inc. P.C.
CONSULTING ENGINEERS AND LAND SURVEYORS
2100 State Street, P.O. Box 1325
Granite City, Illinois 62040
Phone:(618)877-1400/(618)452-6335
Fax:(618)452-5541
100 North Research Drive
Edwardsville, Illinois 62025
Phone: (618)692-0900/(618) 659-0800
Fax: (618)659-0941

GEOMETRICS
F.A.U. ROUTE 8899
GLEN CROSSING ROAD PHASE 2
GLEN CARBON, ILLINOIS
SECTION No. 05-00026-01-RP

REVISIONS			
NO.	DATE	BY	REMARKS
DWG. NO.			

SCALE: 1 Inch = 10 feet

DSN. BY:	BFK	DATE:	3/13/08	SHEET 42
DWN. BY:	DAN	DATE:	3/13/08	
CHK'D:	BFK	DATE:	3/13/08	
JOB NO.	E070614B	DGN. NAME:	PLAN_01	OF 81 SHTS