03-06-2020 LETTING ITEM 089

F.A.P.	SECTION	COUNTY	TOTAL SHEETS	SHEET NO.
789	(125,125-1)RS-5	MADISON	10	1
	ILLINOIS	CONTRACT NO. 76N07		

STATE OF ILLINOIS

DEPARTMENT OF TRANSPORTATION

PROPOSED
HIGHWAY PLANS

FAP 789 (IL 143)
SECTION (125,125-1)RS-5
PROJECT NHPP-V9Q0(562)
RESURFACING - SMART IMPROVEMENTS
MADISON COUNTY

FOR INDEX OF SHEETS, SEE SHEET NO. 2

BRIDGE OMISSIONS

STRUCTURE NO.	LOCATION	DECK LENGTH
060-0191	0.90 M.S. - 0.93 M.S.	172.20 FT.
060-0192	0.90 M.S. - 0.93 M.S.	176.20 FT.

	OASIS DR.	DRDA LN.
ADT (CONSTRUCTION YR):	10300	8400
MU%	1.3	1.8
SU%	5.1	4.8
20 YR. ESAL'S:	1.92	1.92

D-98-033-20

LOCATION OF SECTION INDICATED THUS:-

C-98-047-20

END PROJECT
2.44 M.S.
LATITUDE: 38.837453
LONGITUDE: -90.020853

SN 060-0191 - BRIDGE OMISSION
0.90 M.S. - 0.93 M.S.

SN 060-0192 - BRIDGE OMISSION
0.90 M.S. - 0.93 M.S.

BEGIN RESURFACING
0.00 M.S.
LATITUDE: 38.825847
LONGITUDE: -89.979619

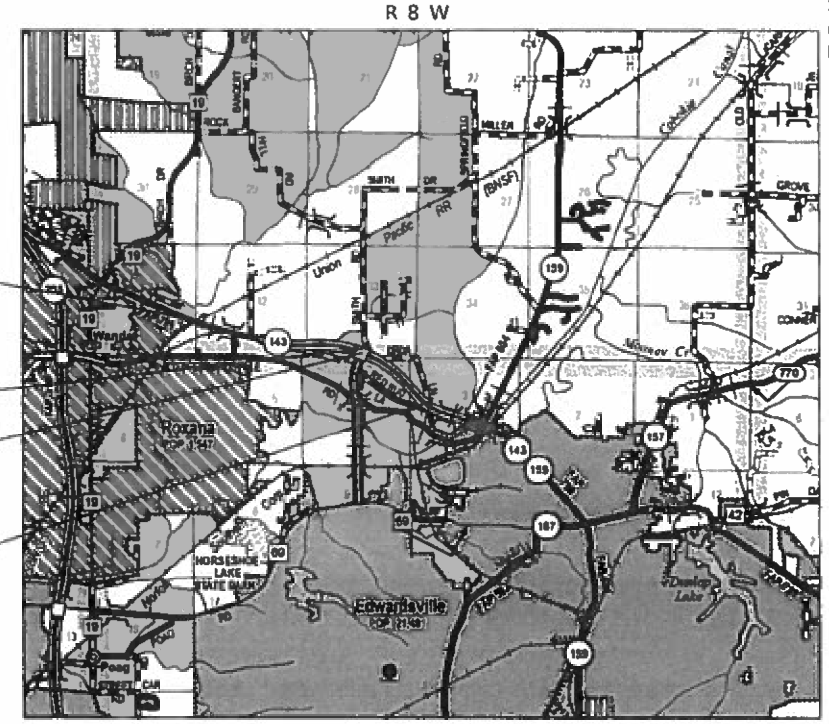

LOCATION MAP

1" = 1 MILE

GROSS LENGTH = 12883.20 FT. = 2.440 MILE

NET LENGTH = 12707.0 FT. = 2.407 MILE

1" = 100'
1" = 10'
1" = 50'
1" = 40'
1" = 30'
1" = 20'

FULL SIZE PLANS HAVE BEEN PREPARED USING STANDARD ENGINEERING SCALES. REDUCED SIZED PLANS WILL NOT CONFORM TO STANDARD SCALES. IN MAKING MEASUREMENTS ON REDUCED PLANS, THE ABOVE SCALES MAY BE USED.

J.U.L.I.E.
JOINT UTILITY LOCATION INFORMATION FOR EXCAVATION
1-800-892-0123
OR 811

STATE OF ILLINOIS
DEPARTMENT OF TRANSPORTATION

SUBMITTED Dec 3 2019
Keith Roberts
REGIONAL ENGINEER

Jan 31 2020
ENGINEER OF DESIGN AND ENVIRONMENT

Jan 31 2020
DIRECTOR OF HIGHWAYS PROJECT IMPLEMENTATION

PROJECT ENGINEER: TIM PADGETT (618)346-3325
PROJECT MANAGER: DIANA MURRAY (618)346-3207

CONTRACT NO. 76N07

PRINTED BY THE AUTHORITY OF THE STATE OF ILLINOIS

INDEX OF SHEETS

1	COVER
2	INDEX OF SHEETS, HIGHWAY STANDARDS, GENERAL NOTES & COMMITMENTS
3	SUMMARY OF QUANTITIES
4-5	TYPICAL SECTIONS
6-8	SCHEDULE OF QUANTITIES
9	LOCATION MAP
10	RAMP DETAILS

HIGHWAY STANDARDS

000001-07	STANDARD SYMBOLS, ABBREVIATIONS AND PATTERNS
001006	DECIMAL OF AN INCH AND OF A FOOT
406001-06	ENTRANCE RAMP TERMINAL
406101-05	EXIT RAMP TERMINAL
420001-09	PAVEMENT JOINTS
442201-03	CLASS C AND D PATCHES
701001-02	OFF-RD OPERATIONS, 2L, 2W, MORE THA 15' (4.5M) AWAY
701006-05	OFF-RD OPERATIONS, 2L, 2W, 15' (4.5M) TO 24" (600MM) FROM PAVEMENT EDGE
701101-05	OFF-RD OPERATIONS, MULTILANE, 15' (4.5M) TO 24" (600MM) FROM PAVEMENT EDGE
701201-05	LANE CLOSURE, 2L, 2W, DAY ONLY, FOR SPEEDS ≥ 45 MPH
701301-04	LANE CLOSURE, 2L, 2W SHORT TERM OPERATIONS
701306-04	LANE CLOSURE, 2L, 2W, SLOW MOVING OPERATIONS DAY ONLY, FOR SPEEDS ≥ 45 MPH
701311-03	LANE CLOSURE, 2L, 2W, MOVING OPERATIONS - DAY ONLY
701336-07	LANE CLOSURE, 2L, 2W, WORK AREAS IN SERIES, FOR SPEEDS ≥ 45 MPH
701411-09	LANE CLOSURE, MULTILANE, AT ENTRANCE OR EXIT RAMP, FOR SPEEDS ≥ 45 MPH
701421-08	LANE CLOSURE, MULTILANE, DAY OPERATIONS ONLY, FOR SPEEDS ≥ 45 MPH TO 55 MPH
701426-09	LANE CLOSURE, MULTILANE, INTERMITTENT OR MOVING OPER., FOR SPEEDS ≥ 45 MPH
701901-08	TRAFFIC CONTROL DEVICES
780001-05	TYPICAL PAVEMENT MARKINGS
781001-04	TYPICAL APPLICATIONS RAISED REFLECTIVE PAVEMENT MARKERS

GENERAL NOTES

1. ILLINOIS STATE LAW REQUIRES A 48-HOUR NOTICE TO BE GIVEN TO ALL UTILITIES WITHIN THE PROJECT AREA BEFORE DIGGING. FIELD MARKING OF FACILITIES MAY BE OBTAINED BY CONTACTING J.U.L.I.E. OR FOR NON-MEMBERS, THE UTILITY COMPANY DIRECTLY. AGENCIES KNOWN TO HAVE FACILITIES WITHIN THE PROJECT AREA ARE AS FOLLOWS:

UTILITY	ABOVE GROUND	BELOW GROUND
*AMEREN ILLINOIS (GAS & ELECTRIC)	X	X
*BUCKEYE PARTNERS L.P.-- WOODRIVER PIPELINE (PIPELINE)		X
*CHARTER COMMUNICATIONS (CABLE TV)	X	X
*AT&T ILLINOIS (COMMUNICATIONS)	X	X
*NORTHEAST CENTRAL COUNTY PUBLIC WATER DISTRICT (WATER)		X
*VILLAGE OF ROXANA (WATER AND SANITARY SEWER)		X
*SOUTHWESTERN ELECTRIC COOPERATIVE, INC. (ELECTRIC)	X	X

MEMBERS OF J.U.L.I.E. (800-892-0123 OR 811) ARE INDICATED BY AN *. NON-JULIE MEMBERS MUST BE NOTIFIED INDIVIDUALLY.

2. THE CONTRACTOR AND THE ENGINEER SHALL BE AWARE THAT NO SURVEY WAS PERFORMED FOR THIS PROJECT, THE STATIONING, TOPOGRAPHY AND QUANTITIES SHOWN ON THESE PLANS WERE CREATED USING MICROFILM AND FIELD MEASUREMENTS. ALL SHALL BE ASSUMED TO BE APPROXIMATE. THE CONTRACTOR SHALL VERIFY DIMENSIONS AND CONDITIONS IN THE FIELD PRIOR TO CONSTRUCTION AND ORDERING OF MATERIALS.

3. PROPOSED PAVEMENT MARKING SHALL BE PLACED IN THE SAME LOCATION AS EXISTING AS DIRECTED BY THE ENGINEER.

4. NO OVERNIGHT LANE CLOSURES WILL BE PERMITTED.

5. AN ESTIMATED QUANTITY OF 5831 TONS OF CUTTINGS FROM THE HOT-MIX ASPHALT SURFACE REMOVAL OPERATION IS ANTICIPATED. WIDTHS AS MEASURED IN THE FIELD.

6. SHORT TERM PAVEMENT MARKING SHALL BE APPLIED TO MILLED AND FINAL SURFACE. ONLY REMOVAL FROM FINAL SURFACE SHALL BE PAID FOR AS SHORT TERM PAVEMENT MARKING REMOVAL. TAPE SHALL BE APPLIED FOR DIAGONAL PAVEMENT MARKING ON THE SHOULDER.

7. AN EMPTIED MATERIAL TRANSFER DEVICE IS ALLOWED OVER STRUCTURES SN 060-0083, SN 060-0158, SN 060-0191, SN 060-0192 AND SN 060-2500.

8. THE THICKNESS OF THE HMA MIXTURE SHOWN ON THE PLANS IS THE NOMINAL THICKNESS. DEVIATIONS FROM THE NOMINAL THICKNESS WILL BE PERMITTED WHEN SUCH DEVIATIONS OCCUR DUE TO IRREGULARITIES IN THE EXISTING SURFACE OR BASE ON WHICH THE HMA MIXTURE IS PLACED.

9. THE DEPARTMENT STRONGLY ENCOURAGES THE PRIME CONTRACTOR AND THEIR APPROVED SUB-CONTRACTORS TO HIRE MINORITY, WOMEN AND DISADVANTAGE INDIVIDUALS FROM ITS FEDERALLY FUNDED HIGHWAY SKILLS, E.G., MATH FOR THE TRADES, JOB READINESS, TECHNICAL SKILLS COURSEWORK (CARPENTRY, CONCRETE FLATWORK, BLUEPRING READING, SITE PLANS, SITE WORK, TOOLS USE, ETC.) AND OSHA 10 HOUR CERTIFACTION, TO PREPARE FOR A CAREER IN THE HIGHWAY CONSTRUCTION TRADES. GRADUATES ARE WELL-TRAINED AND READY TO BECOME PRODUCTIVE ENTRY-LEVEL CONSTRUCTION WORKERS. CONTACT THE DISTRICT 8 EEO OFFICE AT 618-346-3360 AND/OR THE HCCTP COORDINATOR AT 618-874-6528 TO LEARN MORE ABOUT THE PROGRAM AND FOR ASSISTANCE IN MEETING WORKFORCE AND TRAINEE GOALS.

COMMITMENTS

NONE

MIXTURE REQUIREMENTS

ROUTE	FAP 789 (IL 143)
SECTION	(125, 125-1)RS-5
COUNTY	MADISON
CONTRACT	76N07

DESCRIPTION	SMART - RESURFACING - IL 143 FROM FROM 0.1 MI W. OF OASIS DR. TO 0.1 MI E. OF DRDA LN.

MIXTURE USE	SURFACE	PATCHING
AC/PG	PG 64-22	PG 64-22
RAP % (MAX)	SEE SPECIAL PROVISION	SEE SPECIAL PROVISION
DESIGN AIR VOIDS	4.0%@Ndes=70	4.0% @Ndes=70
MIX COMPOSITION (GRADATION MIXTURE)	IL 9.5	IL 19.0
FRICTION AGG	MIXTURE "D"	MIXTURE "B"
QUALITY MGMT PROGRAM	QCP	QC/QA

PLAN QUANTITIES FOR BITUMINOUS CONCRETE SURFACE COURSE ITEMS ARE CALCULATED USING A UNIT WEIGHT OF 112 LB/SQ YD/IN (59.8 KG/SQ M/25 MM THICKNESS).

CODE NO.	ITEM	UNIT	TOTAL QUANTITY (80% FED 20% STATE)	CONSTR. CODE ROADWAY 0005 URBAN
40600290	BITUMINOUS MATERIALS (TACK COAT)	POUND	31213	31213
40600990	TEMPORARY RAMP	SQ YD	245	245
40604062	HOT-MIX ASPHALT SURFACE COURSE, IL-9.5, MIX "D", N70	TON	5831	5831
44000155	HOT-MIX ASPHALT SURFACE REMOVAL,1 1/2"	SQ YD	69357	69357
44200144	PAVEMENT PATCHING, TYPE II,12 INCH	SQ YD	48	48
44200148	PAVEMENT PATCHING, TYPE III, 12 INCH	SQ YD	18	18
44200150	PAVEMENT PATCHING, TYPE IV,12 INCH	SQ YD	37	37
67000400	ENGINEER'S FIELD OFFICE, TYPE A	CAL MO	3	3
67100100	MOBILIZATION	L SUM	1	1
70100310	TRAFFIC CONTROL AND PROTECTION, STANDARD 701421	L SUM	1	1
70100420	TRAFFIC CONTROL AND PROTECTION, STANDARD 701411	EACH	4	4
70100450	TRAFFIC CONTROL AND PROTECTION, STANDARD 701201	L SUM	1	1
70100460	TRAFFIC CONTROL AND PROTECTION, STANDARD 701306	L SUM	1	1
70100600	TRAFFIC CONTROL AND PROTECTION, STANDARD 701336	L SUM	1	1

	CODE NO.	ITEM	UNIT	TOTAL QUANTITY (80% FED 20% STATE)	CONSTR. CODE ROADWAY 0005 URBAN
	70107025	CHANGEABLE MESSAGE SIGN	CAL DA	42	42
	70300100	SHORT TERM PAVEMENT MARKING	FOOT	5756	5756
	70300150	SHORT TERM PAVEMENT MARKING REMOVAL	SQ FT	830	830
	70300210	TEMPORARY PAVEMENT MARKING LETTERS AND SYMBOLS	SQ FT	63	63
	70300220	TEMPORARY PAVEMENT MARKING - LINE 4"	FOOT	60878	60878
	70300260	TEMPORARY PAVEMENT MARKING - LINE 12"	FOOT	192	192
*	78000100	THERMOPLASTIC PAVEMENT MARKING - LETTERS AND SYMBOLS	SQ FT	63	63
*	78000200	THERMOPLASTIC PAVEMENT MARKING - LINE4"	FOOT	60878	60878
*	78000600	THERMOPLASTIC PAVEMENT MARKING - LINE 12"	FOOT	192	192
*	78100100	RAISED REFLECTIVE PAVEMENT MARKER	EACH	298	298
	78300200	RAISED REFLECTIVE PAVEMENT MARKER REMOVAL	EACH	298	298
	X7030005	TEMPORARY PAVEMENT MARKING REMOVAL	SQ FT	20432	20432
	Z0033700	LONGITUDINAL JOINT SEALANT	FOOT	22230	22230
	Z0034105	MATERIAL TRANSFER DEVICE	TON	5831	5831

* SPECIALTY ITEM

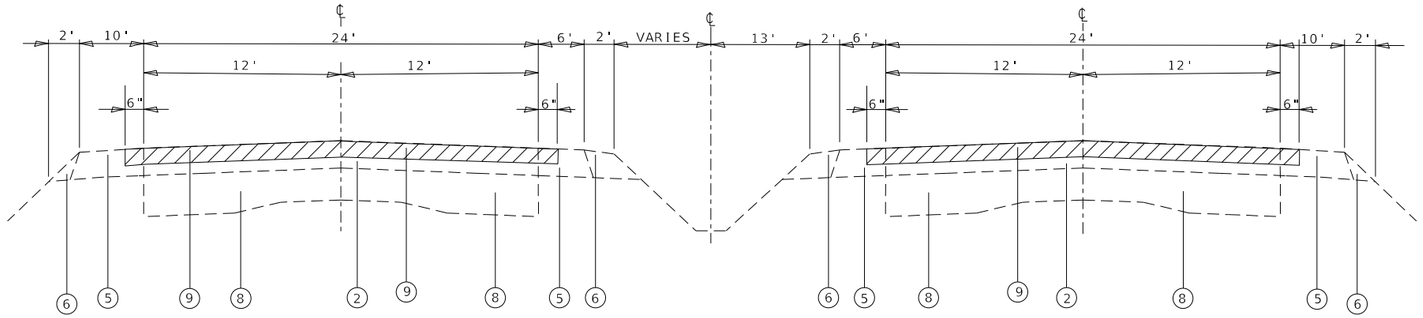

EXISTING SECTION

0.00 MILE STA. TO 1.83 MILE STA.

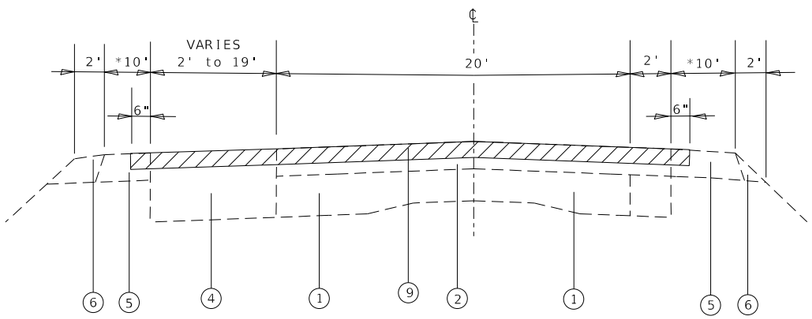

EXISTING SECTION

1.83 MILE STA. TO 1.98 MILE STA.

• SHOULDER TRANSITIONS FROM 10' TO 3'
1.92 MILE STA. TO 1.98 MILE STA.

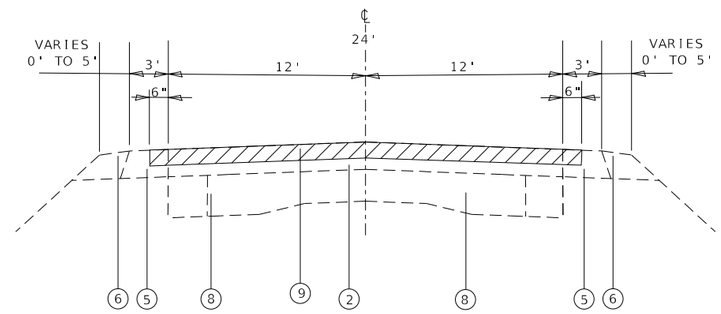

EXISTING SECTION

1.98 MILE STA. TO 2.41 MILE STA.

HOT-MIX ASPHALT SURFACE REMOVAL

LEGEND

1. EXISTING CONCRETE PAVEMENT (9"-7"-9")
2. EXISTING BITUMINOUS OVERLAY 2 1/2"
3. EXISTING BITUMINOUS OVERLAY 4"
4. EXISTING BASE COURSE WIDENING (BITUMINOUS), 9"
5. EXISTING HOT-MIX ASPHALT SHOULDERS, 6"
6. EXISTING AGGREGATE WEDGE, TYPE A
7. EXISTING CONCRETE GUTTER, TYPE A
8. EXISTING 8" CONCRETE REINFORCED PAVEMENT
9. PROPOSED HOT-MIX ASPHALT SURFACE REMOVAL, 1 1/2"
10. PROPOSED BITUMINOUS MATERIALS (TACK COAT)
11. PROPOSED HOT-MIX ASPHALT SURFACE COURSE, MIX "D", N70, 1-1/2"
12. PROPOSED THERMOPLASTIC PAVEMENT MARKING - LINE 4"
13. PROPOSED LONGITUDINAL JOINT SEALANT

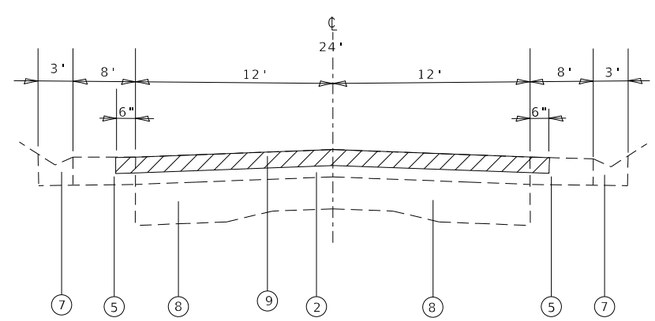

EXISTING SECTION

2.41 MILE STA. TO 2.44 MILE STA.

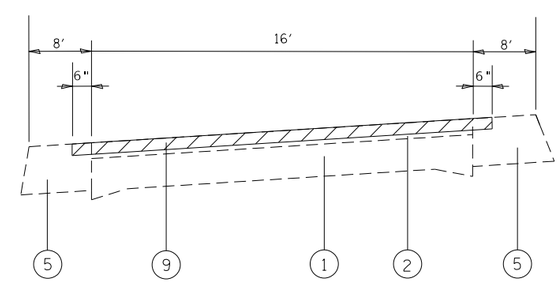

EXISTING SECTION

EB ENTRANCE RAMP
WB EXIT RAMP
EB EXIT RAMP
WB ENTRANCE RAMP

MODEL: $MODELNAME$
FILE NAME: pw:\\pwmroom.dot.illinois.gov:PWIDOT\Documents\IDOT Offices\District 8\Projects\D876N07\CAD\Data\CAD sheets\D876N07-sht-typlc-sht.dgn

USER NAME = murrayda	DESIGNED - _____	REVISED - _____	
	DRAWN - _____	REVISED - _____	
PLOT SCALE = 2.0000 ' / in.	CHECKED - _____	REVISED - _____	
PLOT DATE = 11/19/2019	DATE - _____	REVISED - _____	

STATE OF ILLINOIS
DEPARTMENT OF TRANSPORTATION

TYPICAL SECTIONS

SCALE: _____ | SHEET 1 OF 2 SHEETS | STA. _____ TO STA. _____

F.A.P. R.T.E.	SECTION	COUNTY	TOTAL SHEETS	SHEET NO.
789	(125,125-1) RS-5	MADISON	10	4
		CONTRACT NO. 76N07		
		ILLINOIS	FED. AID PROJECT	

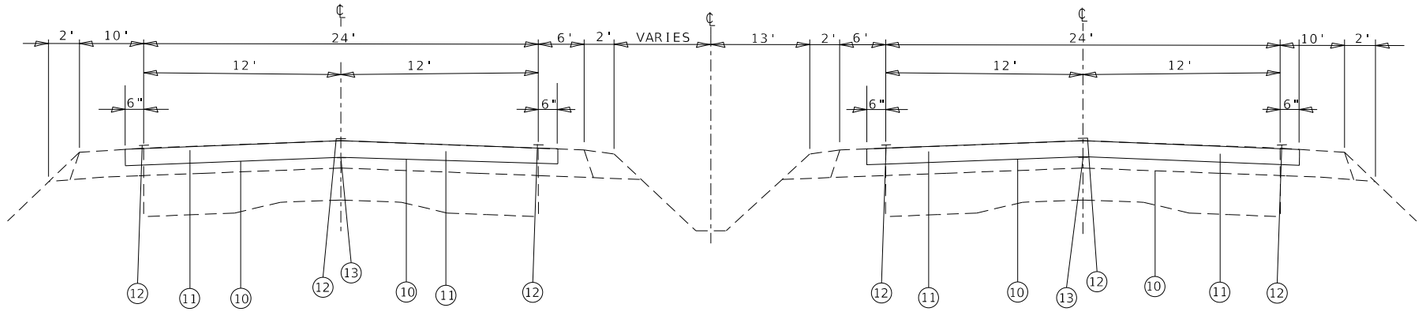

PROPOSED SECTION

0.00 MILE STA. TO 1.83 MILE STA.

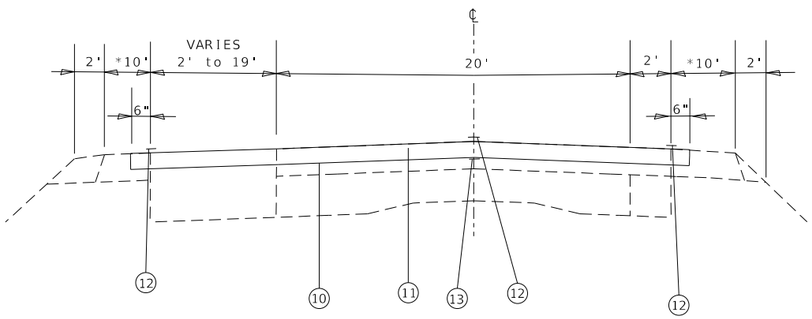

PROPOSED SECTION

1.83 MILE STA. TO 1.98 MILE STA.

• SHOULDER TRANSITIONS FROM 10' TO 3'
1.92 MILE STA. TO 1.98 MILE STA.

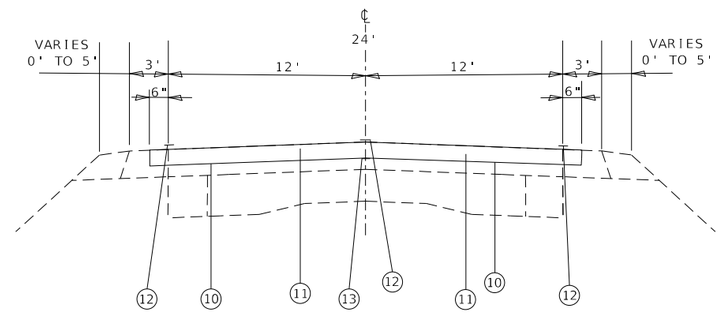

PROPOSED SECTION

1.98 MILE STA. TO 2.41 MILE STA.

HOT-MIX ASPHALT SURFACE REMOVAL

LEGEND

1. EXISTING CONCRETE PAVEMENT (9"-7"-9")
2. EXISTING BITUMINOUS OVERLAY 2 1/2"
3. EXISTING BITUMINOUS OVERLAY 4"
4. EXISTING BASE COURSE WIDENING (BITUMINOUS), 9"
5. EXISTING HOT-MIX ASPHALT SHOULDERS, 6"
6. EXISTING AGGREGATE WEDGE, TYPE A
7. EXISTING CONCRETE GUTTER, TYPE A
8. EXISTING 8" CONCRETE REINFORCED PAVEMENT
9. PROPOSED HOT-MIX ASPHALT SURFACE REMOVAL, 1 1/2"
10. PROPOSED BITUMINOUS MATERIALS (TACK COAT)
11. PROPOSED HOT-MIX ASPHALT SURFACE COURSE, MIX "D", N70, 1-1/2"
12. PROPOSED THERMOPLASTIC PAVEMENT MARKING - LINE 4"
13. PROPOSED LONGITUDINAL JOINT SEALANT

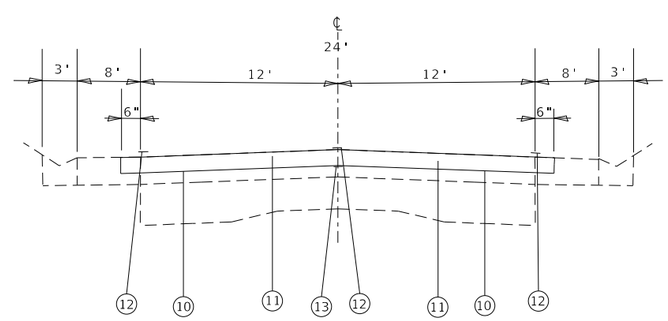

PROPOSED SECTION

2.41 MILE STA. TO 2.44 MILE STA.

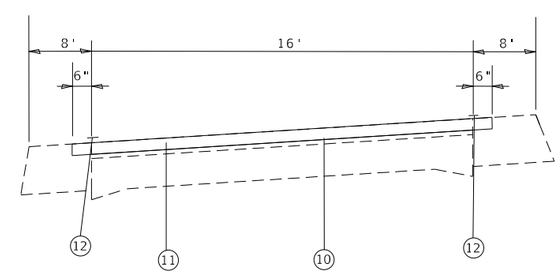

PROPOSED SECTION

EB ENTRANCE RAMP
WB EXIT RAMP
EB EXIT RAMP
WB ENTRANCE RAMP

MODEL: $MODELNAME$
FILE NAME: pw:\\pwmroom.dot.illinois.gov:PWIDOT\Documents\IDOT Offices\District 8\Projects\D876N07\CADData\CADsheets\D876N07-sht-typlcs1.dgn

USER NAME = murrayda	DESIGNED - _____	REVISED - _____	
	DRAWN - _____	REVISED - _____	
PLOT SCALE = 2.0000 ' / in.	CHECKED - _____	REVISED - _____	
PLOT DATE = 11/19/2019	DATE - _____	REVISED - _____	

STATE OF ILLINOIS
DEPARTMENT OF TRANSPORTATION

TYPICAL SECTIONS

SCALE: _____ | SHEET 2 OF 2 SHEETS | STA. _____ TO STA. _____

F.A.P. R.T.E.	SECTION	COUNTY	TOTAL SHEETS	SHEET NO.
789	(125,125-1) RS-5	MADISON	10	5
		CONTRACT NO. 76N07		

ILLINOIS | FED. AID PROJECT

RESURFACING SCHEDULE

MILE STATION TO MILE STATION			DIMENSION LENGTH	DIMENSION WIDTH	* HMA SURFACE REMOVAL 1 1/2 "	LONGITUDINAL JOINT SEALANT	BITUMINOUS MATERIALS (TACK COAT)	HMA SURFACE COURSE IL-9.5 MIX D N70
			FOOT	FOOT	SQ YD	FOOT	POUND	TON
MAINLINE								
0.00	-	0.90	4752	50	26400	9504	11880	2218
0.90	-	0.93	BRIDGE OMISSION					
0.93	-	1.83	4752	50	26400	9504	11880	2218
1.83	-	1.98	792	34	2992	792	1347	252
1.98	-	2.41	2271	25	6309	2271	2839	530
2.41	-	2.44	159	25	442	159	199	38
RAMPS								
EB ENTRANCE @ 0.75 M.S.			1161	17	2193		987	185
WB EXIT @ 0.94 M.S.			504	17	952		429	80
EB EXIT @ 1.16 M.S.			757	17	1430		644	121
WB ENTRANCE @ 1.25 M.S.			1185	17	2239		1008	189
TOTAL:					69357	22230	31213	5831

* MILLED AN ADDITIONAL 6" ON EACH SIDE TO ALLOW FOR PROPOSED PAVEMENT MARKING.

TEMPORARY RAMP SCHEDULE

LOCATION MILE STATION	LOCATION NAME	DESCRIPTION	EXISTING MATERIAL	TEMPORARY RAMPS, 1.50" WIDTH	TEMPORARY RAMPS, 1.50" LENGTH	TEMPORARY RAMPS, 1.50" SQ YD
IL 143 - MAINLINE						
0.00	BEGIN OF PROJECT	MAINLINE	HMA	48	5	26.7
0.15	DRDA LN	LEFT	HMA	55	2	12.2
0.15	DRDA LN	RIGHT	HMA	65	2	14.4
0.90	SN 060-0191	MAINLINE	HMA	24	5	13.3
0.90	SN 060-0192	MAINLINE	HMA	24	5	13.3
0.93	SN 060-0191	MAINLINE	HMA	24	5	13.3
0.93	SN 060-0192	MAINLINE	HMA	24	5	13.3
1.53	SHULTE LN	LEFT	HMA	60	2	13.3
1.53	DRDA LN	RIGHT	HMA	50	2	11.1
1.93	INDIAN HILLS DR	RIGHT	HMA	70	2	15.6
2.09	BENDER HILL RD	LEFT	HMA	165	2	36.7
2.40	OASIS DR	RIGHT	HMA	45	2	10.0
2.44	END OF PROJECT	MAINLINE	HMA	24	5	13.3
IL 143 - RAMPS						
0.75	EB ENTRANCE RAMP	MAINLINE	HMA	17	5	9.4
0.94	WB EXIT RAMP	MAINLINE	HMA	17	5	9.4
1.16	EB EXIT RAMP	MAINLINE	HMA	17	5	9.4
1.25	WB ENTRANCE RAM	MAINLINE	HMA	17	5	9.4
TOTAL:						244.4

1:40 TAPERS WILL NOT BE CONSTRUCTED AT SIDEROADS. 2' TEMPORARY RAMPS WILL BE USED TO MINIMIZE IMPACTS TO THE MAINLINE TRAFFIC.

PAVEMENT MARKING SCHEDULE

MILE STATION TO MILE STATION	LENGTH	SHORT TERM PAVEMENT MARKING		SHORT TERM PAVEMENT MARKING REMOVAL	TEMPORARY & THERMOPLASTIC PAVEMENT MARKING									RAISED REFLECTIVE PAVEMENT MARKER REMOVAL	RAISED REFLECTIVE PAVEMENT MARKER (AMBER)	RAISED REFLECTIVE PAVEMENT MARKER (CRYSTAL)	TEMPORARY PAVEMENT MARKING REMOVAL
		4" SKIP-DASH WHITE	4" SKIP-DASH YELLOW		4" SOLID WHITE	4" SOLID YELLOW	4" SKIP-DASH WHITE	4" SKIP-DASH WHITE (ABBREVIATED)	4" SKIP-DASH YELLOW	NO PASSING ZONE 4" SOLID YELLOW			12" SOLID YELLOW	LETTERS AND SYMBOLS				
	FOOT	FOOT	FOOT	SQ FT	FOOT	FOOT	FOOT		FOOT	DIR	FOOT		FOOT	SQ FT	EACH	EACH	EACH	SQ FT
EASTBOUND																		
0.000 - 0.015	80	24		3	80		20								1		1	34
0.015 - 0.138	650	148		20	650	650	170								8		8	490
0.138 - 0.152	74	24		3			20								1		1	7
0.152 - 0.158	32	24		3	32		10											14
0.158 - 0.198	212	52		7	424	212	60								3		3	232
0.198 - 0.245	249	72		10	249	249	70	70							3		3	213
0.245 - 0.757	2704	612		83	2704	2704	680								34		34	2030
0.757 - 0.90	756	172		23	756	756	190								9		9	568
0.93 - 1.16	1215	292		40	1215	1215	310								15		15	914
1.16 - 1.52	1901	440		60	1901	1901	480								24		24	1428
1.52 - 1.54	106	28		3			30								1		1	10
1.54 - 1.83	1532	344		47	1532	1532	390								19		19	1152
1.83 - 1.93	528		100	17	528					EB-2	1056		192		14	14		592
1.93 - 2.07	740		140	24	740										9	9		247
2.10 - 2.44	1796		340	57	1796										22	22		599
WESTBOUND																		
0.000 - 0.015	79	24		3	79		20								1		1	34
0.015 - 0.037	116	48		7	116	116	30	30							1		1	98
0.037 - 0.085	253	72		10	507	253	70								3		3	277
0.085 - 0.139	285	72		10	570	285	80								4		4	312
0.139 - 0.145	32	24		3	32		10											14
0.145 - 0.153	42	24		3			20								1		1	7
0.153 - 0.156	16	24		3	16	16												11
0.156 - 0.90	3928	880		120	3928	3928	990								49		49	2949
0.93 - 1.25	1690	388		53	1690	1690	430								21		21	1270
1.25 - 1.53	1478	340		47	1478	1478	370								18		18	1109
1.53 - 1.54	53	24		3			20								1		1	7
1.54 - 1.74	1056	244		33	1056	1056	270								13		13	794
1.74 - 1.83	475	120		17	475	475									6		6	317
1.83 - 1.93	528		100	17	528					WB-2	1056							528
1.93 - 1.94	53		20	4					20	EB	53							25
1.94 - 2.02	422		80	14	422				110	EB	422							319
2.02 - 2.12	528		100	17	528				140									223
2.12 - 2.14	106		20	4					30									10
2.14 - 2.18	211		40	7	211				60									91
2.18 - 2.37	1003		200	34	1003					WB	1003							669
2.37 - 2.40	158		40	7	158					BOTH	317							159
2.40 - 2.41	53		20	4	53					BOTH	106							53
2.41 - 2.44	158		40	7	158					BOTH	317							159
RAMPS																		
EB ENTRANCE@ 0.75	1161				1407	915												774
WB EXIT @ 0.94	504				1008										6		6	336
EB EXIT @ 1.16	757				1225	289									9		9	505
WB ENTRANCE @ 1.25	1185				1499	871												790
LEFT TURN ARROWS																		
@ 0.094 - WB														15.6				16
@ 0.130 - WB														15.6				16
@ 0.168 - EB														15.6				16
@ 0.189 - EB														15.6				16
SUBTOTAL		4516	1240	830	30756	20592	4740	100	360		4330		192	62.4	298	46	252	20432
TOTAL		5756		830	60878								192	62.4	298	298		20432

MODEL: $MODELNAMES
FILE NAME: pw:\\dbarroom.dot.illinois.gov:PWIDOT\Documents\IDOT Offices\District 8\Projects\D876N07\CADData\CADsheets\D876N07-sht-schedule.dgn

USER NAME = murrayda	DESIGNED - _____	REVISED - _____
	DRAWN - _____	REVISED - _____
PLOT SCALE = 2.0000 ' / in.	CHECKED - _____	REVISED - _____
PLOT DATE = 12/5/2019	DATE - _____	REVISED - _____

STATE OF ILLINOIS
DEPARTMENT OF TRANSPORTATION

SCHEDULE OF QUANTITIES

SCALE: _____ SHEET 2 OF 3 SHEETS STA. _____ TO STA. _____

F.A.P. R.T.E.	SECTION	COUNTY	TOTAL SHEETS	SHEET NO.
789	(125,125-1) RS-5	MADISON	10	7
		CONTRACT NO. 76N07		
		ILLINOIS FED. AID PROJECT		

PAVEMENT PATCHING SCHEDULE							
MILE STATION	DIRECTION	LOCATION	DIMENSIONS		TYPE II	TYPE III	TYPE IV
			LENGTH	WIDTH			
			FOOT	FOOT	SQ YD	SQ YD	SQ YD
0.00	WB	MIDDLE	12	12		16	
0.11	WB	INSIDE	4	12	5		
0.12	WB	OUTSIDE	25	12			33
1.33	WB	OUTSIDE	4	12	5		
0.14	EB	INSIDE	4	12	5		
0.14	EB	OUTSIDE	4	12	5		
1.76	EB	INSIDE	6	12	8		
1.76	EB	OUTSIDE	6	12	8		
2.44	EB		10	6	7		
	SUBTOTAL				43	16	33
	12% SUBTOTAL*				5	2	4
	TOTAL				48	18	37

*NOTE: AN ADDITIONAL 12% HAS BEEN ADDED TO THE FINAL PATCHING QUANTITY TO ALLOW FOR WINTER DAMAGE.

MODEL: $MODELNAME$
FILE NAME: pw:\\planroom.dot.illinois.gov:PWIDOT\Documents\IDOT Offices\District 8\Projects\D876N07\CADData\CADsheets\D876N07-sht-schedule.dgn

USER NAME = murrayda	DESIGNED - _____	REVISED - _____	
	DRAWN - _____	REVISED - _____	
PLOT SCALE = 2.0000 ' / in.	CHECKED - _____	REVISED - _____	
PLOT DATE = 12/2/2019	DATE - _____	REVISED - _____	

STATE OF ILLINOIS
DEPARTMENT OF TRANSPORTATION

SCHEDULE OF QUANTITIES

SCALE: _____ | SHEET 3 OF 3 SHEETS | STA. _____ TO STA. _____

F.A.P. R.T.E.	SECTION	COUNTY	TOTAL SHEETS	SHEET NO.
789	(125,125-1) RS-5	MADISON	10	8
		CONTRACT NO. 76N07		
		ILLINOIS	FED. AID PROJECT	

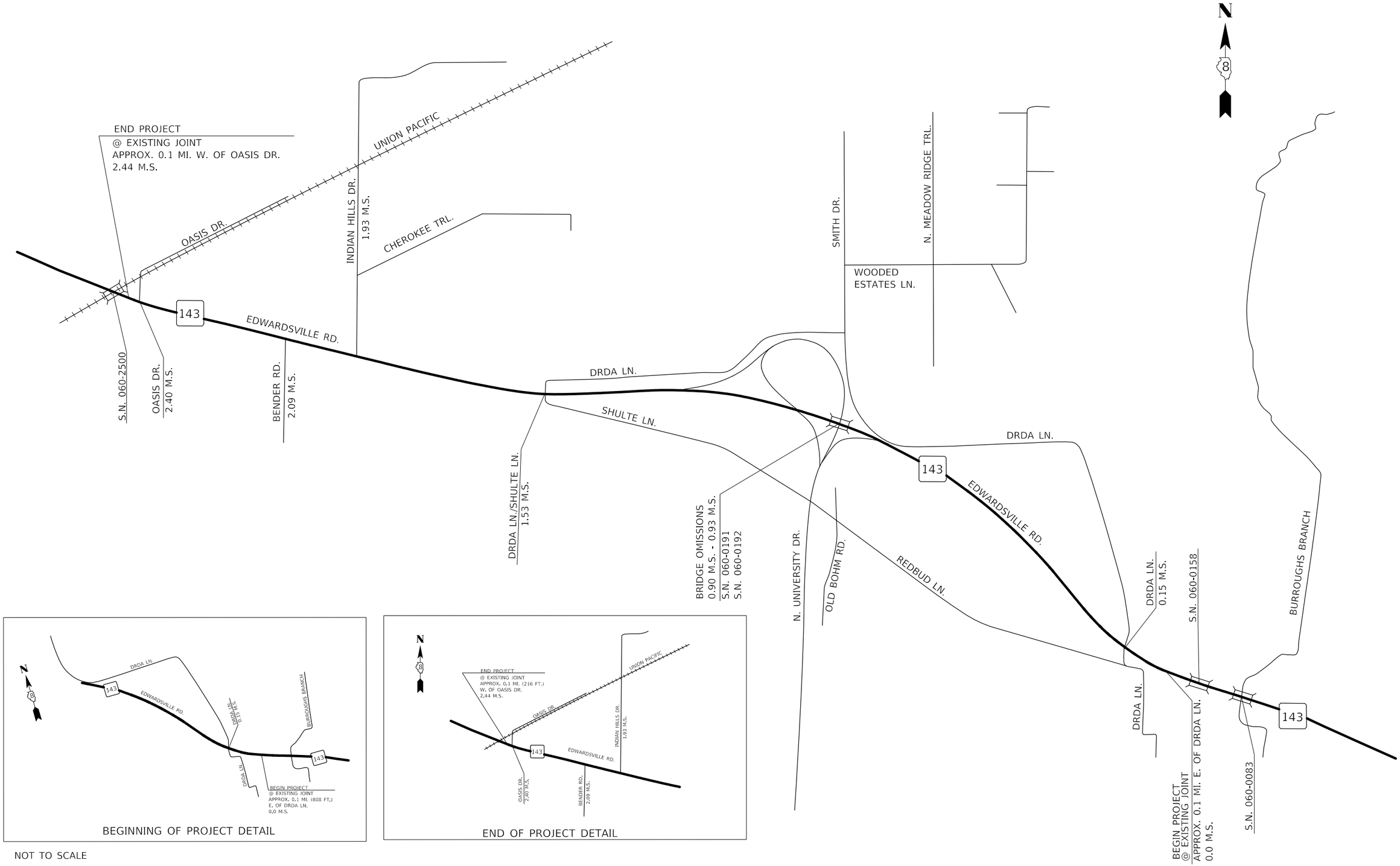

NOT TO SCALE

MODEL: $MODELNAME$
FILE NAME: pw:\\ilanroom.dot.illinois.gov:PWIDOT\Documents\IDOT Offices\District 8\Projects\0876N07\CADData\CADsheets\0876N07-sht-sllan.dgn

USER NAME = murrayda	DESIGNED - _____	REVISED - _____	
	DRAWN - _____	REVISED - _____	
PLOT SCALE = 2.0000 ' / in.	CHECKED - _____	REVISED - _____	
PLOT DATE = 11/19/2019	DATE - _____	REVISED - _____	

STATE OF ILLINOIS
DEPARTMENT OF TRANSPORTATION

LOCATION MAP

SCALE: _____ | SHEET 1 OF 1 SHEETS | STA. _____ TO STA. _____

F.A.P. RTE.	SECTION	COUNTY	TOTAL SHEETS	SHEET NO.
789	(125,125-1)RS-5	MADISON	10	9
		CONTRACT NO. 76N07		
	ILLINOIS	FED. AID PROJECT		

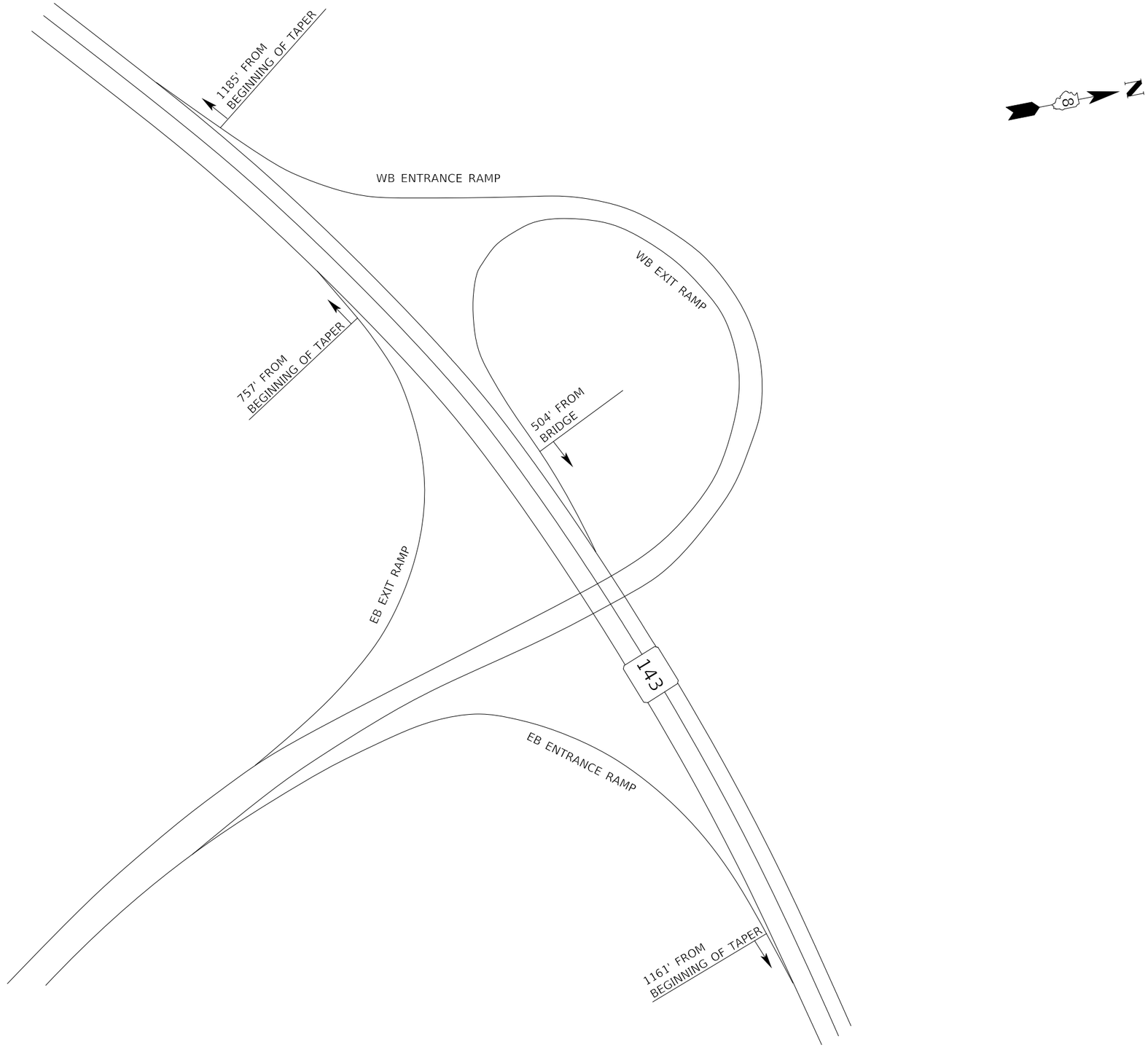

NOT TO SCALE

MODEL: $MODELNAMES
FILE NAME: pw:\\ibmroom.dot.illinois.gov:PWIDOT\Documents\IDOT Offices\District 8\Projects\D876N07\CADData\CADsheets\D876N07-sht-details.dgn

USER NAME = murrayda	DESIGNED - _____	REVISED - _____	
	DRAWN - _____	REVISED - _____	
PLOT SCALE = 2.0000 ' / in.	CHECKED - _____	REVISED - _____	
PLOT DATE = 12/2/2019	DATE - _____	REVISED - _____	

STATE OF ILLINOIS
DEPARTMENT OF TRANSPORTATION

RAMP DETAILS

SCALE: _____ SHEET 1 OF 1 SHEETS STA. _____ TO STA. _____

F.A.P. RTE.	SECTION	COUNTY	TOTAL SHEETS	SHEET NO.
789	(125,125-1)RS-5	MADISON	10	10
		CONTRACT NO. 76N07		
	ILLINOIS	FED. AID PROJECT		