PRECAST REINFORCED CONCRETE ARCH DIAMETER FLARED END SECTION

SIZE	WALL	SPAN	RISE	L	B	C	E	A	SLOPE	R-1	R-2	R-3	R-4	R-5
450 (18)	64 (2 1/2)	559 (22)	343 (13 1/2)	1829 (72)	686 (27)	1143 (45)	914 (36)	178 (7)	1:2.16	699 (27 1/2)	349 (13 3/4)	133 (5 1/4)	51 (2)	305 (12)
600 (24)	76 (3)	724 (28 1/2)	457 (18)	1829 (72)	991 (39)	838 (33)	1219 (48)	203 (8)	1:2.29	1033 (40 11/16)	370 (14 9/16)	117 (4 9/32)	76 (3)	356 (14)
750 (30)	89 (3 1/2)	921 (36 1/4)	572 (22 1/2)	1829 (72)	1219 (48)	610 (24)	1524 (60)	254 (10)	1:2.34	1295 (51)	476 (18 3/4)	156 (6 1/8)	76 (3)	381 (15)
900 (36)	102 (4)	1111 (43 3/4)	676 (26 5/8)	2438 (96)	1524 (60)	914 (36)	1828 (72)	270 (10 5/8)	1:2.4	1575 (62)	572 (22 1/2)	165 (6 1/2)	152 (6)	508 (20)
1050 (42)	114 (4 1/2)	1308 (51 1/8)	795 (31 5/16)	2438 (96)	1524 (60)	914 (36)	1981 (78)	402 (15 13/16)	1:2.35	1854 (73)	667 (26 1/4)	197 (7 3/4)	152 (6)	559 (22)
1200 (48)	127 (5)	1485 (58 1/2)	914 (36)	2438 (96)	1524 (60)	914 (36)	2134 (84)	533 (21)	1:2.31	2134 (84)	762 (30)	225 (8 7/8)	152 (6)	559 (22)
1350 (54)	140 (5 1/2)	1651 (65)	1016 (40)	2438 (96)	1524 (60)	914 (36)	2286 (90)	648 (25 1/2)	1:2.26	2350 (92 1/2)	848 (33 3/8)	254 (10)	152 (6)	610 (24)
1500 (60)	152 (6)	1854 (73)	1143 (45)	2438 (96)	1905 (75)	533 (21)	2438 (96)	660 (26)	1:2.34	2667 (105)	953 (37 1/2)	281 (11 1/16)	152 (6)	533 (21)
1800 (72)	178 (7)	2235 (88)	1371 (54)	2540 (100)	1981 (78)	559 (22)	3048 (120)	889 (35)	1:2.29	3200 (126)	1143 (45)	338 (13 5/16)	152 (6)	610 (24)

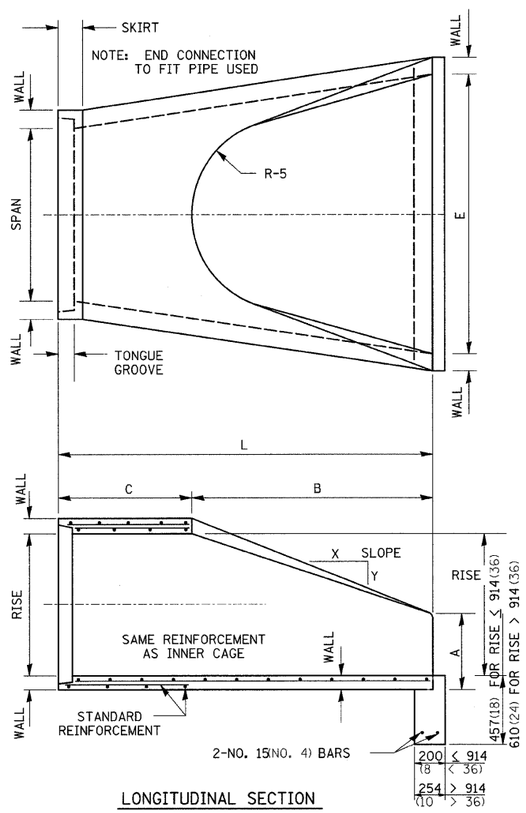

LONGITUDINAL SECTION

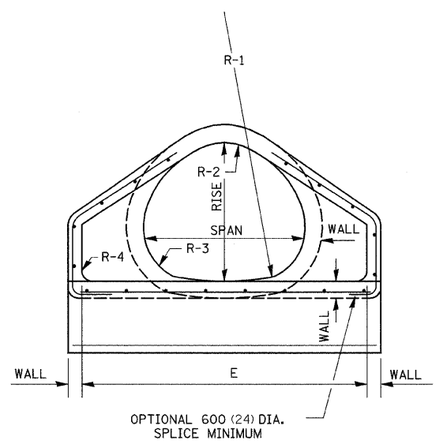

END VIEW

NOTES:

PRECAST CONCRETE FLARED END SECTIONS SHALL CONFORM TO THE APPLICABLE REQUIREMENT OF AASHTO M-206.

PRECAST CONCRETE FLARED END SECTION FOR PIPE ARCH DIAMETER REQUIRED SHALL BE AS INDICATED ON DETAIL PLAN FOR EACH INDIVIDUAL INSTALLATION.

THE END BLOCK SHALL BE PLACED PRIOR TO THE INSTALLATION OF THE FLARED END SECTION. THE END BLOCK SHALL BE BACKFILLED IN ACCORDANCE WITH ART. 502.10 (502.11) OF THE STANDARD SPECIFICATIONS, COST INCIDENTAL TO END SECTION.

ALL DIMENSIONS ARE IN MILLIMETERS (INCHES) UNLESS OTHERWISE NOTED.

PLOT DATE = Fri Dec 29 13:52:59 2007
FILE NAME = c:\pw_work\pw_214\d0705pl.dgn
PLOT SCALE = 50.0000 ' / IN.
REFERENCE = REF