CONTRACT NO. 64D51

| F.A.P. RTE. | SECTION | COUNTY | TOTAL SHEETS | SHEET NO. |
|---|---|---|---|---|
| *303 | 129 M & TS | WINNEBAGO | 110 | 12 |
| STA. | | TO STA. | | |
| FED. ROAD DIST. NO. | ILLINOIS | FED. AID PROJECT | | |

*(IL 173)

# TYPICAL SECTIONS – TEMPORARY WIDENING

**LT. STA. 246+79.16 – 247+70.9680 (IL 173)**
**LT. STA. 249+00.00 – 251+39.558 (IL 173)**

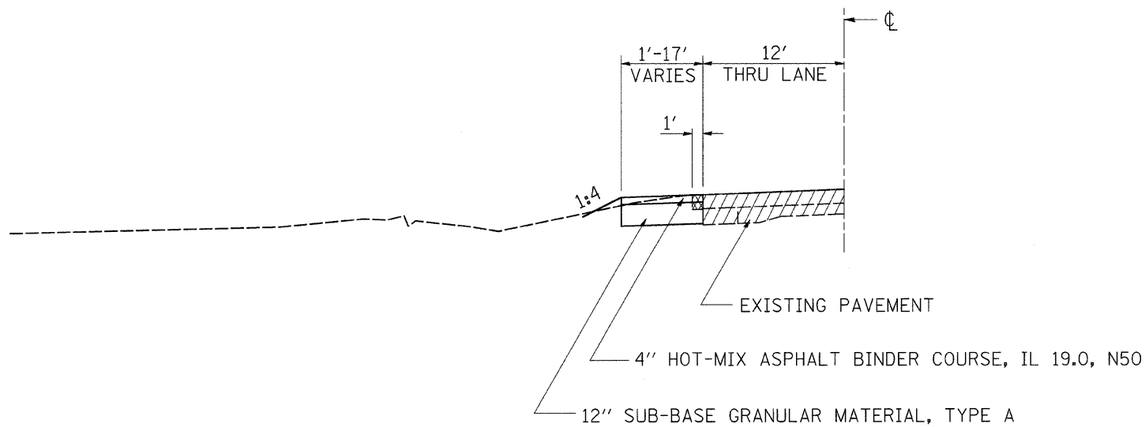


**LT. STA. 100+60.436 – 100+92.243**
**(BELEVIDERE ROAD)**

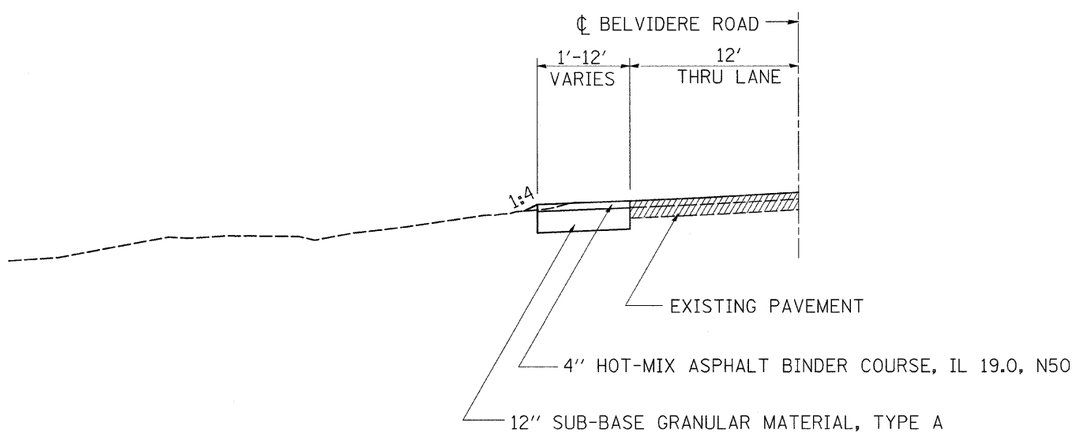


**RT. STA. 100+50.00 – 101+50.00**
**(BELVIDERE ROAD)**

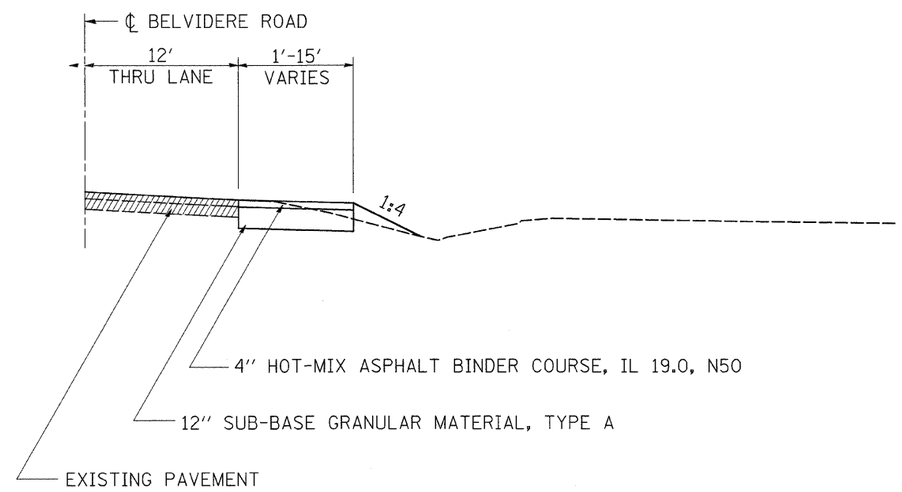


EXISTING

PAVEMENT REMOVAL

PLOT DATE = Mon Dec 03 11:31:37 2007
FILE NAME = c:\pw_pw1\k:\d297787\gm.dgn
PLOT SCALE = 50.000 ' / IN.
REFERENCE = $REF$

**TYPICAL SECTIONS**
**ARGYLE RD & BELVIDERE RD**