CONTRACT NO. 66601

| F.A.P. RTE. | SECTION | COUNTY | TOTAL SHEETS | SHEET NO. |
|---|---|---|---|---|
| 326 | * | LIVINGSTON | 354 | 163 |
| STA. | | TO STA. | | |
| FED. ROAD DIST. NO. | ILLINOIS | FED. AID PROJECT | | |

*(123,123X)RS-3, (124)RS-5, (123)BR-3

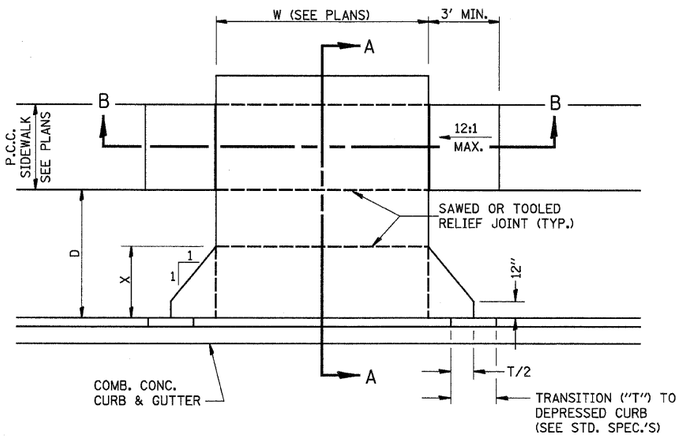


CASE I (D ≥ X)

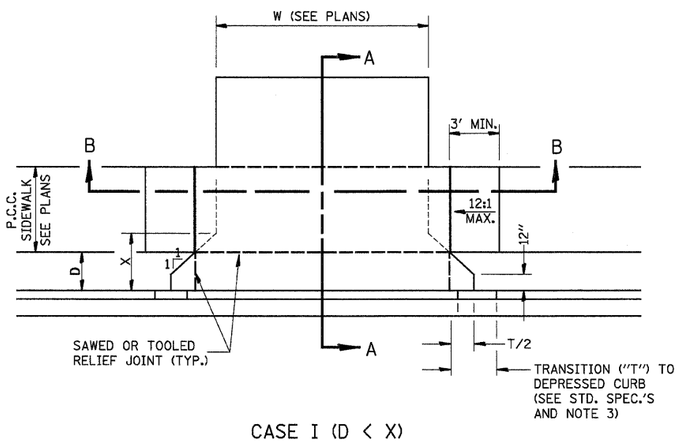


CASE I (D < X)

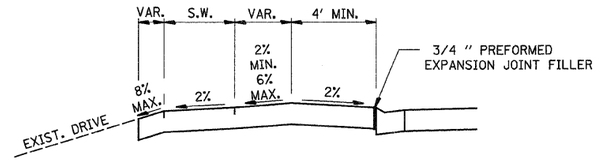


DEPRESSED ENTRANCE*
SECTION A-A

*(SEE X-SECTIONS FOR ENTRANCE PROFILE.)

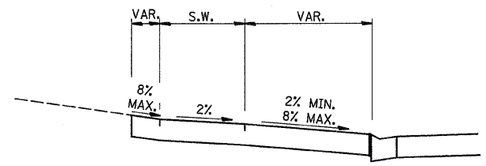


ELEVATED ENTRANCE*
SECTION A-A

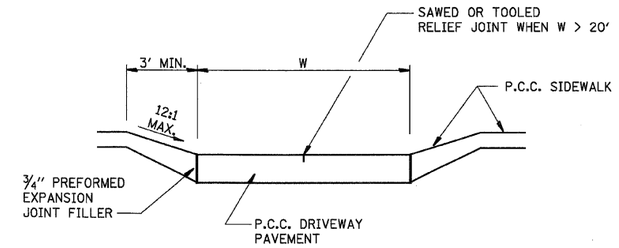


SECTION B-B

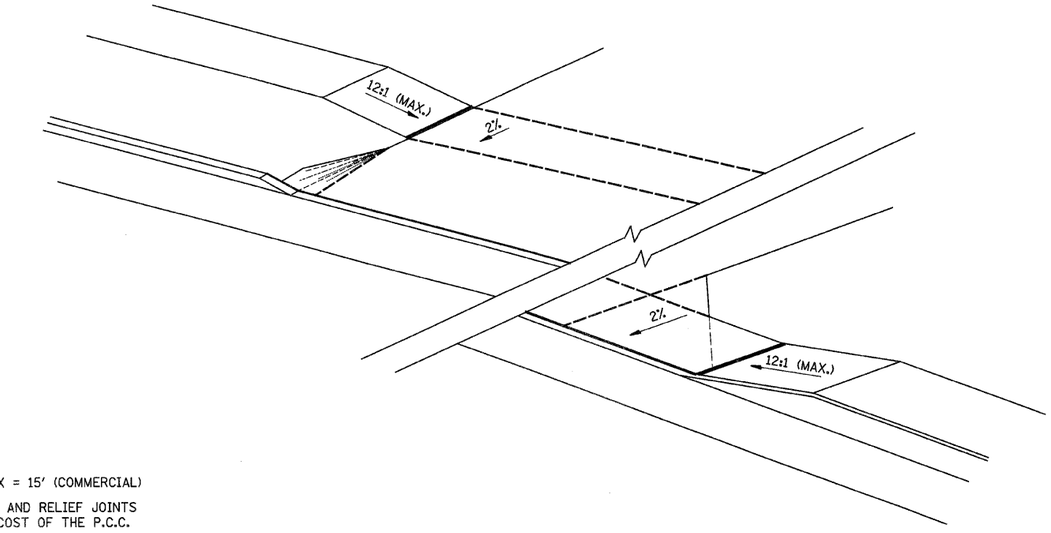


GENERAL NOTES:

1. X = 7' (NON-COMMERCIAL) X = 15' (COMMERCIAL)
2. COST OF EXPANSION JOINTS AND RELIEF JOINTS SHALL BE INCLUDED IN THE COST OF THE P.C.C. DRIVEWAY PAVEMENT.
3. AS THE DIMENSION "D" APPROACHES ZERO, THE TRANSITION TO DEPRESSED CURB SHALL BE NO STEEPER THAN 12:1

# PCC URBAN ENTRANCES

| REVISIONS | |
|---|---|
| NAME | DATE |
| | |

ILLINOIS DEPARTMENT OF TRANSPORTATION

PCC URBAN ENTRANCES

SCALE: VERT. HORIZ.

DATE

DRAWN BY

CHECKED BY