CONTRACT NO. 72624

F.A.P RTE.	SECTION	COUNTY	TOTAL SHEETS	SHEET NO.
753	143RS-6	CHRISTIAN	127	39
STA. 194+00.00		TO STA.200+00.00		
FED. ROAD DIST. NO.	ILLINOIS	FED. AID PROJECT		

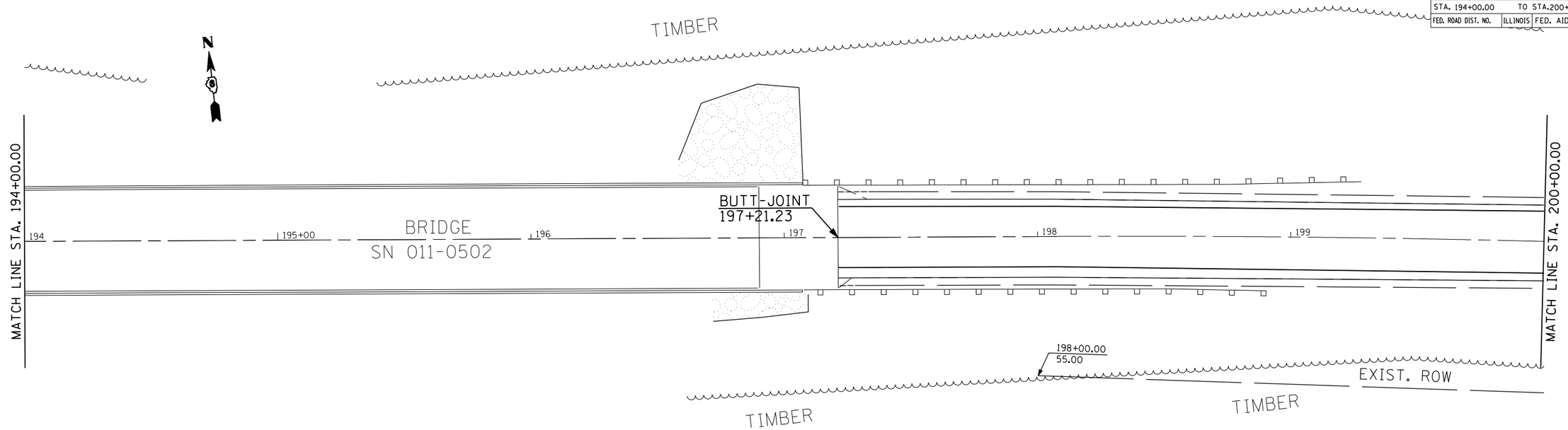

PLAN
NOTE BOOK NO. ____
SURVEYED ____
PLOTTED ____
ALIGNMENT CHECKED ____
RT. OF WAY CHECKED ____
CADD FILE NAME ____

BY	DATE

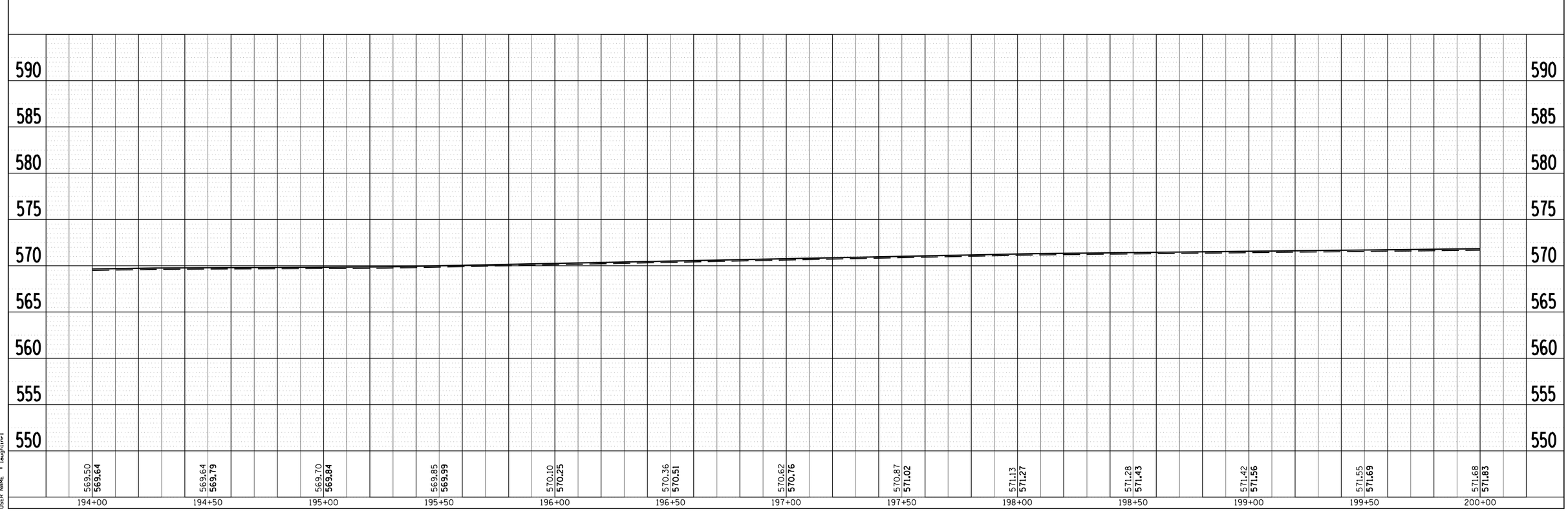

PROFILE
NOTE BOOK NO. ____
SURVEYED ____
PLOTTED ____
GRADES CHECKED ____
B.M. NOTED ____
CADD FILE NAME NOTATNS CH'KD

BY	DATE

PLOT DATE = Dec-12-2007 10:35:42AM
FILE NAME = c:\pro_gects\ed5358\sh\sp&p_e001.dgn
PLOT SCALE = 2.0000 ' / IN.
USER NAME = teughlrr1