ROUTE NO.	SECTION	COUNTY	TOTAL SHEETS	SHEET NO.
T.R. 256	06-11116-00-BR	MACON	14	13
FED. ROAD DIST. NO.		ILLINOIS	PROJECT: BROS-115(63)	

CONTRACT NO. 95530

NOTES

1. The Backwall and the portion of the Wingwalls above the bonded construction joint shall be cast against the in-place beam.
2. 1" dia. x 2'-6" dowel rods in 1½" dia. holes drilled in cap (4 each beam). Dowel rods to be grouted after beams are in place and allowed to cure (min. 24 hrs.) prior to grouting the shear keys. The grout shall be an approved non-shrink grout.
3. Reinforcement bars designated (E) shall be Epoxy coated.
4. Space reinforcement in cap to miss dowel rods.
5. All Elev. given at Bk. of Abut. unless otherwise noted
6. The Metal Shell Piles shall be according to ASTM A 252 Grade 3.
7. The Test Pile shall be driven to 110 percent of the Nominal Required Bearing indicated in the Pile Data information.
8. Reinforcement bars shall conform to the requirements of ASTM A706 Grade 60 (IL Modified). See special provisions.

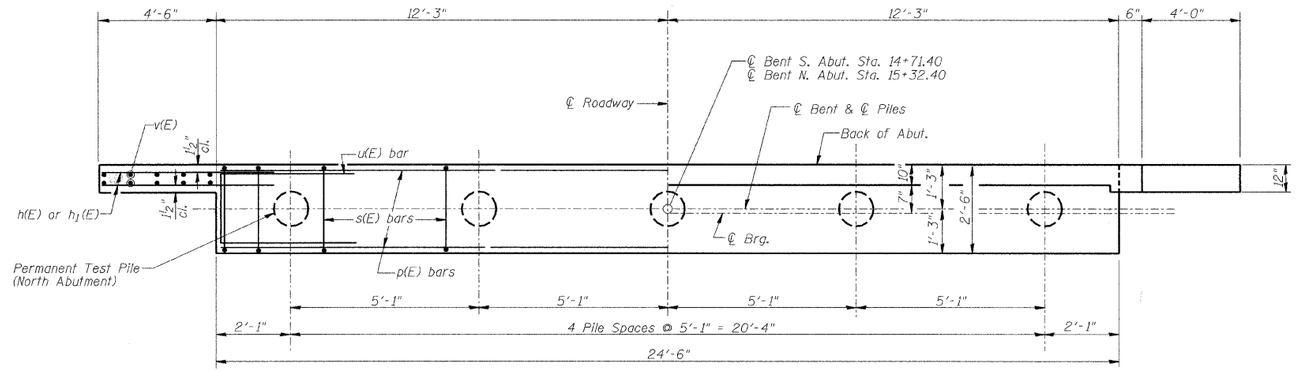

PLAN

PILE DATA

Type & Size: Metal Shell - 12" in. dia. x 0.25 in. walls
Nominal Required Bearing: 216 Kips
Allowable Resistance Available: 72 Kips
Estimated Length: 22'-0" South Abutment
24'-0" North Abutment
No. Required: South Abutment - 5
North Abutment - 4 Plus 1 Permanent Test Pile

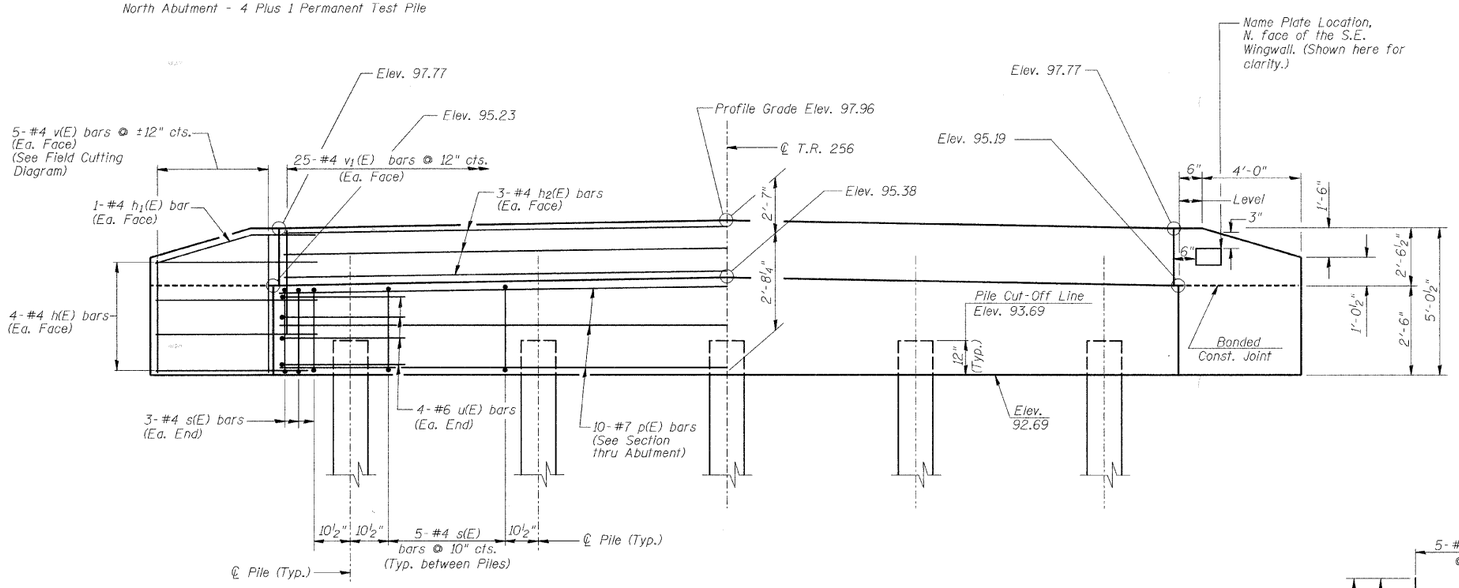

ELEVATION

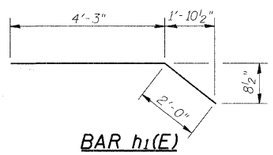

BAR h1(E)

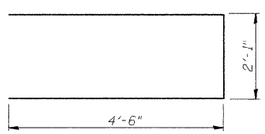

BAR u(E)

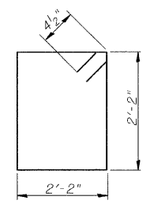

BAR s(E)

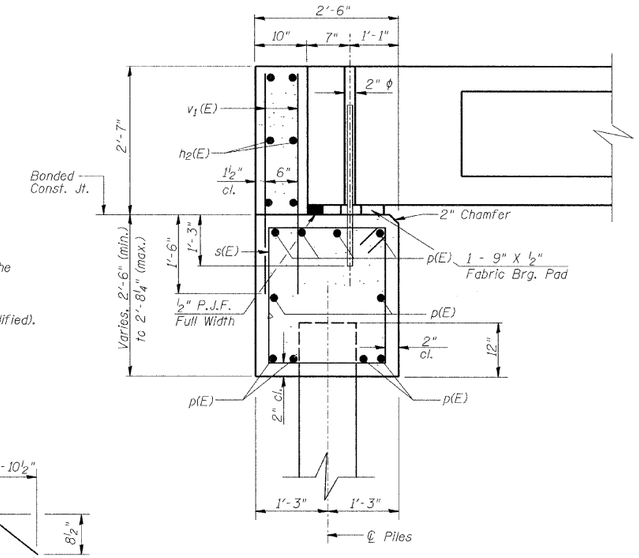

SECTION THRU ABUT.

(At Rt. Angles)

BILL OF MATERIAL
SOUTH & NORTH ABUTMENTS

Bar	No.	Size	Length	Shape
h(E)	32	#4	6'-0"	
h1(E)	8	#4	6'-3"	
h2(E)	12	#4	24'-2"	
p(E)	20	#7	24'-2"	
s(E)	52	#4	9'-5"	
u(E)	16	#6	11'-1"	
v(E)	20	#4	7'-10"	
v1(E)	100	#4	3'-11"	
Concrete Structures			Cu. Yd.	18.6
Reinforcement Bars, Epoxy Coated			Pound	2320
Furnishing Metal Shell Piles 12"			Foot	206
Driving Piles			Foot	206
Test Pile Metal Shells			Each	1

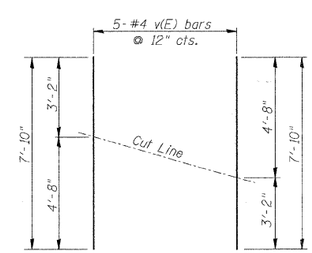

FIELD CUTTING DIAGRAM

Order bars full length. Cut to fit as shown and use remainder of bars in other face.

SOUTH & NORTH ABUTMENTS

Date	Designed MJP	T.R. 256 OVER BIG CREEK SECTION 06-11116-00-BR MACON COUNTY STA. 15+01.90 PROP. STR. NO. 058-3389	Sheet No. 4 of 5
Revisions	Drawn BKN		
	Checked KWB		
	Approved KWB		
Prepared by: URS	345 East Ash Avenue Decatur, Il. 62526		URS Job No. 36431783