F.A.S. RTE.	SECTION	COUNTY	TOTAL SHEETS	SHEET NO.
2905	113B-1	WILLIAMSON	87	38
STA.		TO STA.		
FED. ROAD DIST. NO. 7	ILLINOIS	FED. AID PROJECT		

Contract 98777

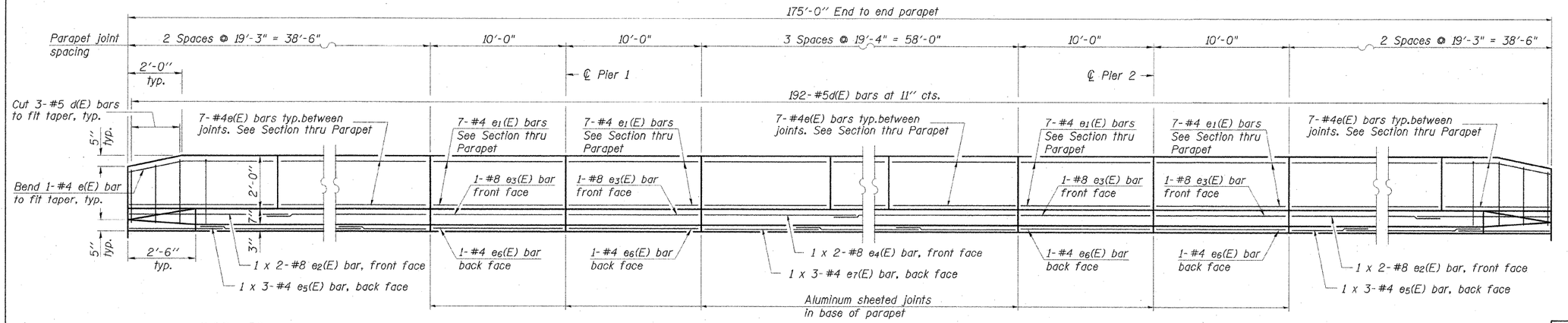

INSIDE ELEVATION OF PARAPET

(South Parapet Shown, North Opposite)

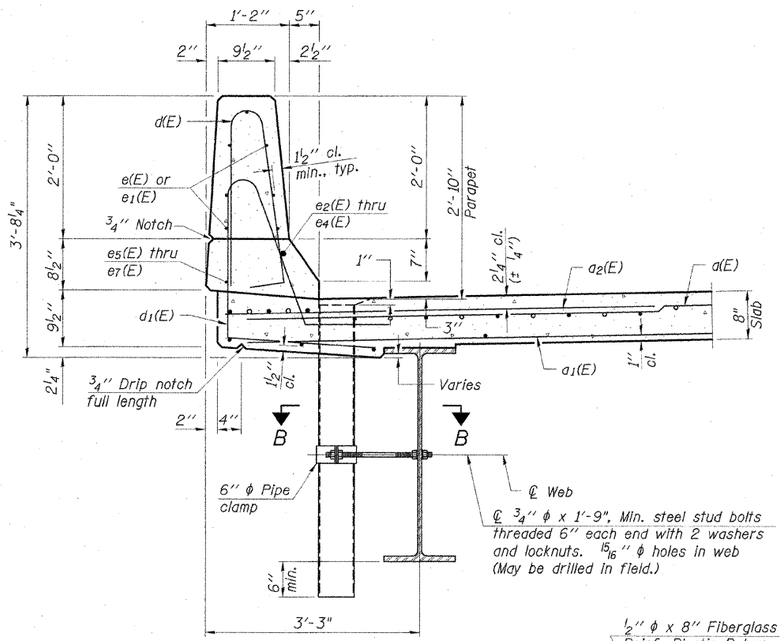

SECTION THRU PARAPET

(Slipforming of parapets shall not be permitted)

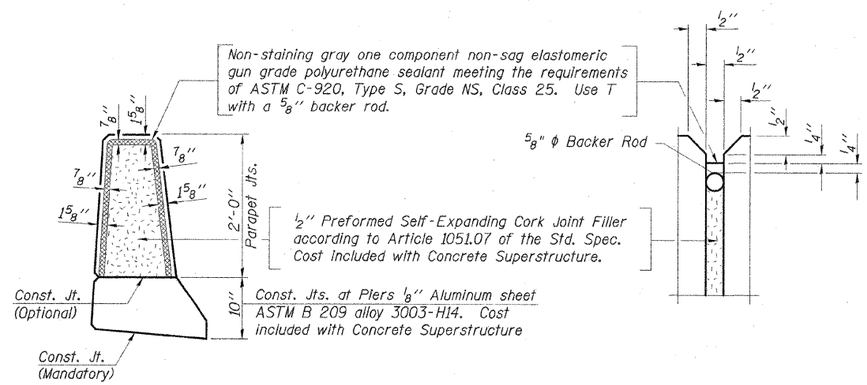

PARAPET JOINT DETAILS

MINIMUM BAR LAP

(Parapet)
#4 bar = 1'-4"
#8 bar = 3'-5"

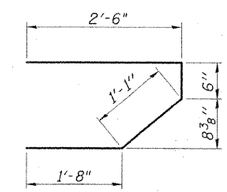

BAR s(E)

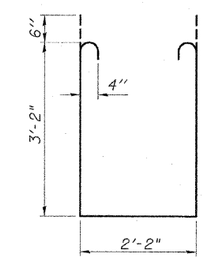

BAR s1(E)

SUPERSTRUCTURE BILL OF MATERIAL

Bar	No.	Size	Length	Shape
d(E)	383	#5	42'-6"	
d1(E)	234	#5	41'-6"	
d2(E)	766	#6	6'-0"	
d3(E)	4	#5	45'-10"	
b(E)	329	#5	26'-10"	
b1(E)	328	#5	23'-9"	
b2(E)	88	#6	40'-9"	
d(E)	384	#5	5'-7"	
d1(E)	384	#5	7'-10"	
e(E)	98	#4	18'-11"	
e1(E)	56	#4	9'-8"	
e2(E)	8	#8	20'-10"	
e3(E)	8	#8	9'-8"	
e4(E)	4	#8	30'-7"	
e5(E)	12	#4	13'-8"	
e6(E)	8	#4	9'-8"	
e7(E)	6	#4	20'-2"	
m(E)	4	#6	44'-2"	
m1(E)	8	#6	46'-2"	
m2(E)	36	#6	10'-0"	
m3(E)	10	#6	7'-6"	
m4(E)	4	#6	3'-2"	
s(E)	92	#5	5'-9"	
s1(E)	82	#4	9'-6"	
v(E)	82	#5	3'-4"	
Reinforcement Bars, Epoxy Coated			Pound	67,970
Concrete Superstructure			Cu. Yd.	258.8
Bar Splicers			Each	82

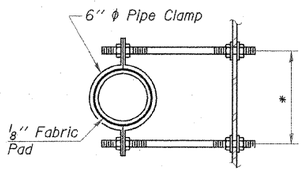

SECTION B-B

* Dimension as required by Pipe Clamp

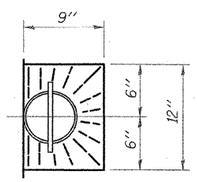

TOP PLAN

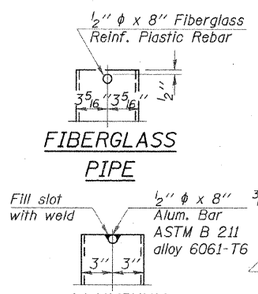

FIBERGLASS PIPE

ALUMINUM TUBE

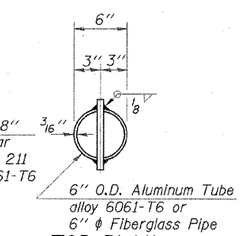

TOP PLAN

(Showing Aluminum Tube)

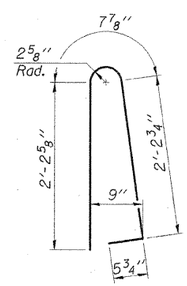

BAR d(E)

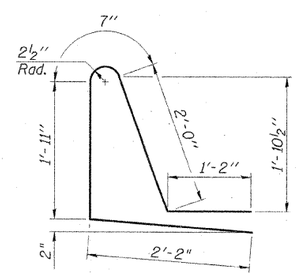

BAR d1(E)

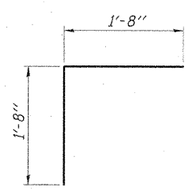

BAR v(E)

NOTES:

1. Bars indicated thus 1x2-#4 etc. indicates 1 line of bars with 2 lengths per line.

Notes:
The exterior surfaces of the floor drains shall be painted with the finish coat as specified in the special provisions for Cleaning and Painting New Metal Structures. The exterior surfaces of the drains shall be cleaned according to Steel Structures Painting Council's Spec. SSPC-SP1 prior to painting.
Fiberglass pipe shall conform to ASTM D 2996, with short-time rupture strength hoop tensile stress of 30,000 p.s.i. minimum.

REVISIONS	
NAME	DATE

CMT
CRAWFORD MURPHY & TILLY, INC.
CONSULTING ENGINEERS
SPRINGFIELD, IL ■ AURORA, IL ■ ST. LOUIS, MO
ROCKFORD, IL ■ PEORIA, IL ■ CHICAGO, IL

ILLINOIS DEPARTMENT OF TRANSPORTATION
PARAPET DETAILS
F.A.S. ROUTE 2905 (IL. RTE. 37)
ILLINOIS ROUTE 37 OVER
BN/SF RAILROAD
SECTION 113B-1 STA. 376+46.00
STR. NO. 100-0090 - WILLIAMSON COUNTY

SCALE: NONE DRAWN BY: GLD
DATE: 12/14/07 CHECKED BY: WLB

L:\IDOT\060660\SN.1000090\draw\sheets\PARAPET DETAILS.dgn
12/6/2007