F.A.S. RTE.	SECTION	COUNTY	TOTAL SHEETS	SHEET NO.
2905	113B-1	WILLIAMSON	87	41
STA.		TO STA.		
FED. ROAD DIST. NO. 7	ILLINOIS	FED. AID PROJECT		

Contract 98777

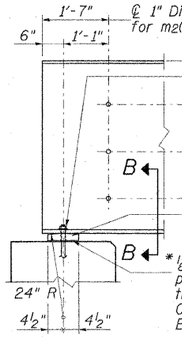

END OF BEAM ELEVATION

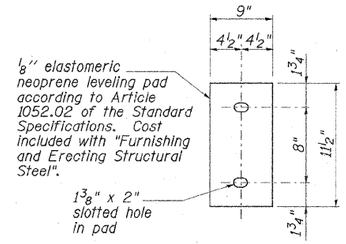

PLAN
ELASTOMERIC NEOPRENE LEVELING PAD (ABUT.)
(12 Required)

*Provide an additional ⅜" shim for Beam 3 at East Abutment.

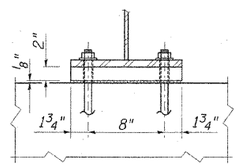

SECTION B-B

Notes:

Anchor bolts shall be ASTM F1554 all-thread (or an Engineer-approved alternate material) of the grade and diameter specified. ASTM A307 Grade C anchor bolts may be used in lieu of ASTM F1554 Grade 36 (Fy=36ksi). The corresponding specified grade of AASHTO M314 anchor bolts may be used in lieu of ASTM F1554.

Anchor bolts may be either cast in place or installed in holes drilled after the supported member is in place.

Drilled and set anchor bolts shall be installed according to Article 521.06 of the Standard Specifications.

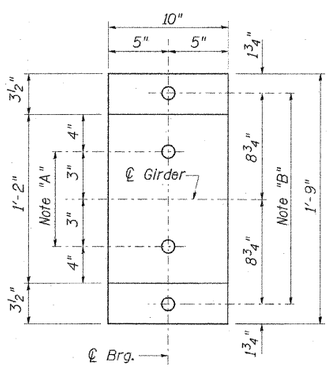

PLAN AT PIER

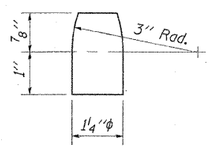

DETAIL OF PINTLE

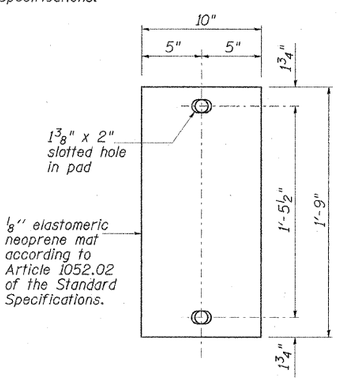

PLAN - ELASTOMERIC NEOPRENE MAT (PIER)
(12 Required)

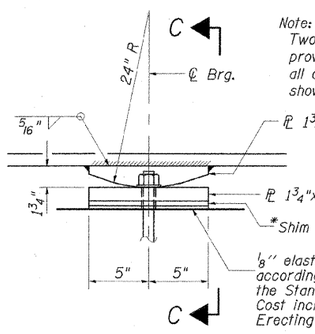

Note:
Two ⅛ in. adjusting shims shall be provided for each bearing in addition to all other plates or shims and placed as shown on bearing details.

ELEVATION AT PIER

Note "A"
1⅜"φ Holes-1" deep in top ℙ for 1¼" φ pintles. Thread or press fit in bottom ℙ.

FIXED BEARING AT PIER 1 & PIER 2
(12 Required)

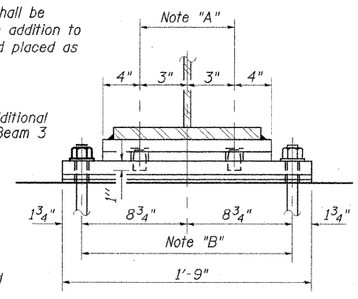

SECTION C-C

Note "B"
1" φ x 1'-0" Anchor bolts with 2¼" x 2¼" x 5/16" ℙ washer under nut 1½" φ Holes in bottom ℙ.

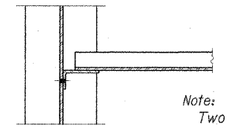

SECTION A-A

Note:
Two hardened washers required for each set of oversized holes.

* Alternate channels are permitted to facilitate material acquisition. Calculated weight of structural steel is based on the lighter section.

** ¾"φ HS bolts, 15/16"φ holes

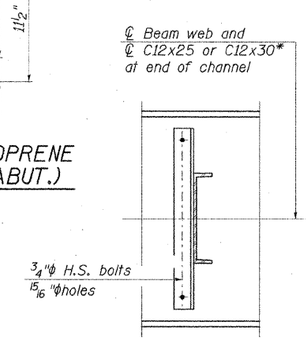

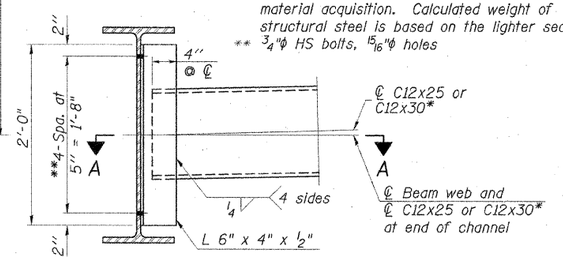

DIAPHRAGM D
(45 Required)

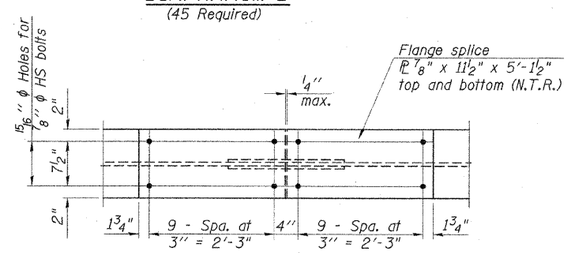

PLAN

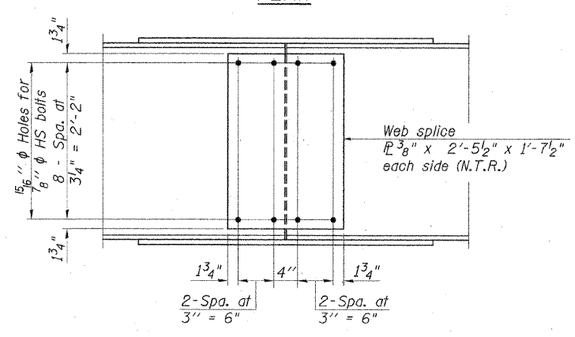

ELEVATION

SPLICE DETAIL
(12 Required)

BILL OF MATERIAL

ITEM	UNIT	TOTAL
Anchor Bolts, 1"	Each	48

Notes:

1. H.S. bolts for splices shall be ⅞"φ AASHTO M164 (ASTM A325) bolts.
2. All splice plate material shall be AASHTO M270 Grade 50 (N.T.R.)
3. Load carrying components designed "N.T.R." shall conform to the supplemental requirements for notch toughness (Zone 2).

INTERIOR BEAM GIRDER MOMENT TABLE				
		0.4 Sp. 1 or 0.6 Sp. 3	Pier 1 or Pier 2	0.5 Span 2
I_s	(in^4)	6710	6710	6710
$I_c(n)$	(in^4)	18,519	—	18,519
$I_c(3n)$	(in^4)	13,734	—	13,734
S_s	(in^3)	406	406	406
$S_c(n)$	(in^3)	603	—	603
$S_c(3n)$	(in^3)	547	—	547
DC1	(k/')	0.913	1.063	0.913
M_{DC1}	('k)	82.5	458.4	291.5
DC2	(k/')	0.150	—	0.150
M_{DC2}	('k)	17.9	—	58.6
DW	(k/')	0.367	0.367	0.367
M_{DW}	('k)	43.7	136.0	143.3
M_{LL+Imp}	('k)	542.4	466.2	854.8
M_u(Strength I)	('k)	1140.3	1592.9	2148.5
$\phi_r M_n$	('k)	3206.1	—	3055.5
f_s DC1	(ksi)	2.44	13.55	8.62
f_s DC2	(ksi)	0.39	—	1.29
f_s DW	(ksi)	0.96	4.02	3.14
f_s 1.3(LL+I)	(ksi)	14.03	17.91	22.11
f_s (Service II)	(ksi)	17.82	35.48	35.16
f_s (Total)(Strength I)	(ksi)	—	47.08	—
V_f	(k)	23.9	—	21.7

INTERIOR BEAM REACTION TABLE HL93 Loading			
		E. Abut. or W. Abut.	Pier 1 or Pier 2
R_{DC1}	(k)	13.0	65.7
R_{DC2}	(k)	2.4	10.6
R_{DW}	(k)	5.8	25.9
R_{LL+Imp}	(k)	73.1	106.0
R_{Total}	(k)	94.3	208.2

NOTES:

I_s, S_s: Non-composite moment of inertia and section modulus of the steel section used for computing f_s (Total-Strength I, and Service II) due to non-composite dead loads (in^4 and in^3).

$I_c(n)$, $S_c(n)$: Composite moment of inertia and section modulus of the steel and deck based upon the modular ratio, "n", used for computing f_s (Total-Strength I, and Service II) due to short-term composite live loads (in^4 and in^3).

$I_c(3n)$, $S_c(3n)$: Composite moment of inertia and section modulus of the steel and deck based upon 3 times the modular ratio, "3n", used for computing f_s (Total-Strength I, and Service II) due to long-term composite (superimposed) dead loads (in^4 and in^3).

DC1: Un-factored non-composite dead load (kips/ft.).

M_{DC1}: Un-factored moment due to non-composite dead load (kip-ft.).

DC2: Un-factored long-term composite (superimposed excluding future wearing surface) dead load (kips/ft.).

M_{DC2}: Un-factored moment due to long-term composite (superimposed excluding future wearing surface) dead load (kip-ft.).

DW: Un-factored long-term composite (superimposed future wearing surface only) dead load (kips/ft.).

M_{DW}: Un-factored moment due to long-term composite (superimposed future wearing surface only) dead load (kip-ft.).

M_{LL+Imp}: Un-factored live load moment plus dynamic load allowance (impact) (kip-ft.).

M_u (Strength I): Factored design moment (kip-ft.).
$1.25\ (M_{DC1} + M_{DC2}) + 1.5\ M_{DW} + 1.75\ M_{LL+Imp}$

$\phi_r M_n$: Compact composite positive moment capacity computed according to Article 6.10.7.1 (kip-ft.).

f_s (Service II): Sum of stresses as computed from the moments below (ksi).
$M_{DC1} + M_{DC2} + M_{DW} + 1.3\ M_{LL+Imp}$

f_s (Total)(Strength I): Sum of stresses as computed from the moments below on non-compact section (ksi).
$1.25\ (M_{DC1} + M_{DC2}) + 1.5\ M_{DW} + 1.75\ M_{LL+Imp}$

V_f: Factored shear range computed according to Article 6.10.10.

REVISIONS	
NAME	DATE

CMT
CRAWFORD MURPHY & TILLY, INC.
CONSULTING ENGINEERS
SPRINGFIELD, IL ■ AURORA, IL ■ ST. LOUIS, MO
ROCKFORD, IL ■ PEORIA, IL ■ CHICAGO, IL

ILLINOIS DEPARTMENT OF TRANSPORTATION

FRAMING DETAILS & TABLES
F.A.S. ROUTE 2905 (IL. RTE. 37)
ILLINOIS ROUTE 37 OVER
BN/SF RAILROAD
SECTION 113B-1 STA. 376+46.00
STR. NO. 100-0090 - WILLIAMSON COUNTY

SCALE: NONE — DRAWN BY: GLD
DATE: 12/14/07 — CHECKED BY: WLB

L:\IDOT\060601\SN_1000090\draw\sheets\FRAMING DETAILS.dgn
12/5/2007