03-07-2025 LETTING ITEM 108

F.A.I. RTE.	SECTION	COUNTY	TOTAL SHEETS	SHEET NO.
64	82-(4,5,6,7)-1RS-2	ST. CLAIR	388*	1
	ILLINOIS	CONTRACT NO. 76R99		

* 388 + 4 = 392 TOTAL SHEETS

QEI
QUIGG ENGINEERING INC
SHEETS: 1–16, 24, 39–70
STEPHEN M. KEHOE, P.E.
EXPIRES 11–30–2025
DATE: 12/02/2024
62-048103 REGISTERED PROFESSIONAL ENGINEER — STATE OF ILLINOIS

WILLETT HOFMANN & ASSOCIATES INC
ENGINEERING ARCHITECTURE LAND SURVEYING
809 EAST 2ND STREET, DIXON, IL 61021-0367
T 815 284 3381 DESIGN FIRM #184-000918
SHEETS: 17–23, 25–29, 38, 71–101, 132–156, 385
GREGORY B. GERARDY, P.E.
EXPIRES 11–30–2025
DATE: 12/02/2024
STATE OF ILLINOIS — GREGORY B GERARDY — #062-073829 — LICENSED PROFESSIONAL ENGINEER — DIXON, IL

Kaskaskia Engineering Group, LLC
PROFESSIONAL REGISTRATIONS: Illinois Professional Design Firm; Professional Engineering Group
LICENSE NO.: 184.009772; 28-0009586
SHEETS: 30, 102–121
ERIC J. LINDEMANN, P.E.
EXPIRES 11–30–2025
DATE: 12/02/2024
ERIC J. LINDEMANN NO. 062-051170 — LICENSED PROFESSIONAL ENGINEER — STATE OF ILLINOIS

ABNA
DESIGN FIRM REG. 184.002217
745 McClintock Drive
Suite 210
Burr Ridge, IL 60527
Ph. 773-881-4788
Fax: 773-239-3728
SHEETS: 36A, 37, 122–131, 212–267, 386–388
JEANNE M. OLUBOGUN, P.E.
EXPIRES 11–30–2025
DATE: 12/02/2024
JEANNE M. OLUBOGUN 062.072444 — PROFESSIONAL ENGINEER — STATE OF ILLINOIS

Illinois Department of Transportation
SHEETS: 31–36, 157–187, 188–Z11

AMES ENGINEERING, INC.
Consulting Engineers
SHEETS: 268–327
BRENDA D. LOWERY, P.E.
EXPIRES 11–30–2025
DATE: 12/02/2024
BRENDA D. LOWERY 062-065244 LICENSED PROFESSIONAL ENGINEER — STATE OF ILLINOIS

WILLETT HOFMANN & ASSOCIATES INC
ENGINEERING ARCHITECTURE LAND SURVEYING
809 EAST 2ND STREET, DIXON, IL 61021-0367
T 815 284 3381 DESIGN FIRM #184-000918
SHEETS: 328–384
ERIK E. LARSON, S.E.
EXPIRES 11–30–2026
DATE: 12/02/2024
ERIK E. LARSON 081-008533 LICENSED STRUCTURAL ENGINEER OF ILLINOIS

SEE SHEET 2 FOR "INDEX OF SHEETS" AND "HIGHWAY STANDARDS"

DESIGN DESIGNATION

I-64: FUNCTIONAL CLASSIFICATION: INTERSTATE
POSTED SPEED: 65 MPH / DESIGN SPEED: 70 MPH

TRAFFIC DATA

I-64: AADT 87,900 (2021), 103,900 (2045)
PV=87.4% / SU=2.4% / MU=10.2%

AADT OF INTERCHANGES

IL 157 RAMP A = 7,100 (2023)
IL 157 RAMP B = 2,500 (2023)
IL 157 RAMP C = 2,700 (2023)
IL 157 RAMP D = 6,200 (2023)
IL 159 RAMP A = 4,050 (2023)
IL 159 RAMP B = 10,900 (2023)
IL 159 RAMP C = 3,000 (2023)
IL 159 RAMP D = 6,800 (2023)
IL 159 RAMP E = 4,050 (2023)
IL 159 RAMP F = 7,300 (2023)
US HWY 50 RAMP A = 5,400 (2023)
US HWY 50 RAMP B = 5,300 (2023)
US HWY 50 RAMP C = 10,100 (2023)
US HWY 50 RAMP D = 9,400 (2023)

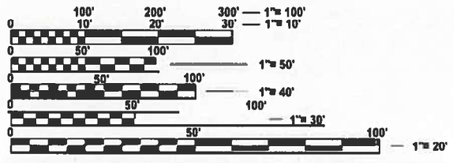

FULL SIZE PLANS HAVE BEEN PREPARED USING STANDARD ENGINEERING SCALES. REDUCED SIZED PLANS WILL NOT CONFORM TO STANDARD SCALES. IN MAKING MEASUREMENTS ON REDUCED PLANS, THE ABOVE SCALES MAY BE USED.

PROJECT ENGINEER: CHERYL KEPLAR
PROJECT MANAGER: TONI MANN

CONTRACT NO. 76R99

STATE OF ILLINOIS
DEPARTMENT OF TRANSPORTATION

PROPOSED HIGHWAY PLANS

FAI ROUTE 64 (I-64)
SECTION 82-(4,5,6,7)-1RS-2
PROJECT NHPP-BUHY(494)
RESURFACING - DESIGNED OVERLAY, BRIDGE AND RAMP REPAIRS
ST. CLAIR COUNTY

C-98-073-23

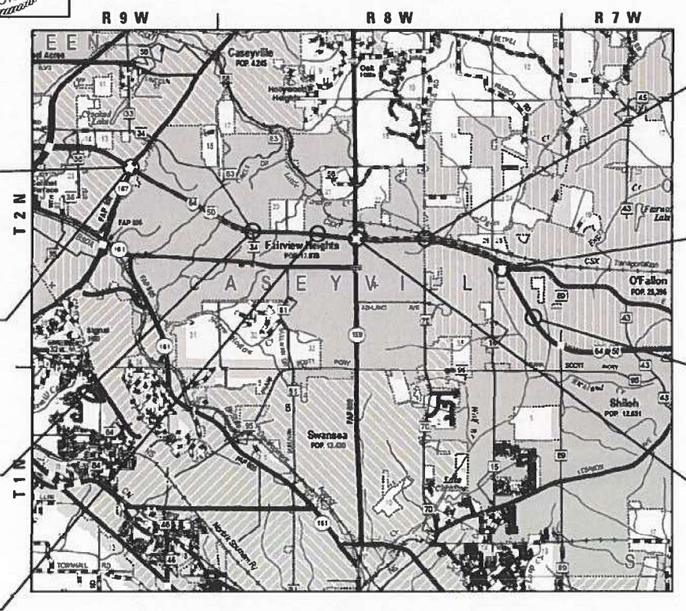

INDEX OF SHEETS

SHEET NO.	DESCRIPTION
1	COVER SHEET
2	INDEX OF SHEETS & HIGHWAY STANDARDS
3 - 4	GENERAL NOTES
5 - 16	SUMMARY OF QUANTITIES
17 - 23	TYPICAL SECTIONS
24 - 37	SCHEDULE OF QUANTITIES
38	OVERALL LOCATION MAP
39	PLAN KEY MAP - I-64
40 - 64	REMOVAL PLANS - I-64
65 - 70	REMOVAL PLANS - RAMPS
71 - 95	ROADWAY PLANS - I-64
96 - 101	ROADWAY PLANS - RAMPS
102	MAINTENANCE OF TRAFFIC - GENERAL NOTES
103 - 104	MAINTENANCE OF TRAFFIC - TYPICALL SECTIONS
105	REAL-TIME TRAFFIC CONTROL SYSTEM
106 - 113	MAINTENANCE OF TRAFFIC - PRE STAGE 1
114 - 121	MAINTENANCE OF TRAFFIC - PRE STAGE 2
122 - 129	MAINTENANCE OF TRAFFIC - IL ROUTE 159 (STAGE 1 & 2)
130 - 131	IL ROUTE 159 - DETOUR PLAN
132 - 156	DRAINAGE, GRADING, AND EROSION CONTROL PLAN
157 - 187	PAVEMENT MARKING PLANS
188 - 211	76299 SIGNS
212 - 259	SIGNING PLANS
260 - 263	OVERHEAD SIGN STRUCTURES
264 - 265	CANTILEVER SIGN STRUCTURES
266 - 267	BRIDGE MOUNT SIGN STRUCTURES
268 - 288	LIGHTING PLANS (IL 157 & I-64)
289 - 306	LIGHTING PLANS (IL 159 & I-64)
307 - 327	LIGHTING PLANS (W HWY 50 & I-64)
328	OVERALL LOCATION MAP (ALL STRUCTURES)
329 - 331	BILL OF MATERIALS (ALL STRUCUTRES)
332 - 338	BRIDGE PLANS (S.N. 082-0306 & S.N. 082-0307)
339 - 348	BRIDGE PLANS (S.N. 082-0174)
349 - 356	BRIDGE PLANS (S.N. 082-0175)
357 - 368	BRIDGE PLANS (S.N. 082-0176)
369 - 372	BRIDGE PLANS (S.N. 082-0308 & S.N. 082-0309)
373 - 384	BRIDGE PLANS (S.N. 082-0179)
385	DETAIL - PIPE UNDERDRAIN CONCRETE HEADWALL
386	DETAIL - MOUNTING HEIGHT
387 - 388	DETAIL - BREAK-AWAY WIDE FLANGE STEEL SIGN POST

IDOT HIGHWAY STANDARDS

STD NO.	DESCRIPTION
000001-08	STANDARD SYMBOLS, ABBREVIATIONS AND PATTERNS
001001-02	AREAS OF REINFORCEMENT BARS
001006	DECIMAL OF AN INCH AND OF A FOOT
280001-07	TEMPORARY EROSION CONTROL SYSTEMS
406001-06	ENTRANCE RAMP TERMINAL (FLEXIBLE RAMP PAVEMENT ADJACENT TO FLEXIBLE MAINLINE PAVEMENT)
406101-05	EXIT RAMP TERMINAL (FLEXIBLE RAMP PAVEMENT ADJACENT TO FLEXIBLE MAINLINE PAVEMENT)
420001-10	PAVEMENT JOINTS
442101-09	CLASS B PATCHES
482001-02	HMA SHOULDER ADJACENT TO FLEXIBLE PAVEMENT
542401-04	METAL FLARED END SECTION FOR PIPE CULVERTS
601001-05	PIPE UNDERDRAINS
606001-08	CONCRETE CURB TYPE B AND COMBINATION CONCRETE CURB AND GUTTER
606301-04	PC CONCRETE ISLANDS AND MEDIANS
630001-13	STEEL PLATE BEAM GUARDRAIL
630301-09	SHOULDER WIDENING FOR TYPE 1 (SPECIAL) GUARDRAIL TERMINALS
631011-10	TRAFFIC BARRIER TERMINAL, TYPE 2
631031-18	TRAFFIC BARRIER TERMINAL, TYPE 6
635001-02	DELINEATORS
642001-03	SHOULDER RUMBLE STRIPS, 16 IN.
701101-05	OFF-ROAD OPERATIONS, MULTILANE, 15' (4.5 M) TO 24" (600 MM) FROM PAVEMENT EDGE
701106-02	OFF-ROAD OPERATIONS, MULTILANE, MORE THAN 15' (4.5 M) AWAY
701201-05	LANE CLOSURE, 2L, 2W, DAY ONLY, FOR SPEEDS > 45 MPH
701301-04	LANE CLOSURE, 2L, 2W, SHORT TIME OPERATIONS
701321-19	LANE CLOSURE, 2L, 2W, BRIDGE REPAIR WITH BARRIER
701400-12	APPROACH TO LANE CLOSURE, FREEWAY/EXPRESSWAY
701401-13	LANE CLOSURE, FREEWAY/EXPRESSWAY
701402-12	LANE CLOSURE, FREEWAY/EXPRESSWAY, WITH BARRIER
701406-13	LANE CLOSURE, FREEWAY/EXPRESSWAY, DAY OPERATIONS ONLY
701411-09	LANE CLOSURE, MULTILANE, AT ENTRANCE OR EXIT RAMP, FOR SPEEDS > 45 MPH
701423-10	LANE CLOSURE, MULTILANE, WITH BARRIER, FOR SPEEDS > 45 MPH TO 55 MPH
701426-09	LANE CLOSURE, MULTILANE, INTERMITTENT OR MOVING OPERATION, FOR SPEEDS > 45 MPH
701428-01	TRAFFIC CONTROL, SETUP AND REMOVAL, FREEWAY/EXPRESSWAY
701446-11	TWO LANE CLOSURE, FREEWAY/EXPRESSWAY
701456-05	PARTIAL EXIT RAMP CLOSURE FREEWAY/EXPRESSWAY
701606-10	URBAN SINGLE LANE CLOSURE, MULTILANE, 2W WITH MOUNTABLE MEDIAN
701901-10	TRAFFIC CONTROL DEVICES
704001-08	TEMPORARY CONCRETE BARRIER
720001-01	SIGN PANEL MOUNTING DETAILS
720006-04	SIGN PANEL ERECTION DETAILS
720011-01	METAL POSTS FOR SIGNS, MARKERS AND DELINEATORS
725001-01	OBJECT AND TERMINAL MARKERS
728001-01	TELESCOPING STEEL SIGN SUPPORT
729001-01	APPLICATIONS OF TYPES A AND B METAL POSTS (FOR SIGNS & MARKERS)
780001-05	TYPICAL PAVEMENT MARKINGS
781001-04	TYPICAL APPLICATIONS RAISED REFLECTIVE PAVEMENT MARKERS
782006-01	GUARDRAIL AND BARRIER WALL REFLECTOR MOUNTING DETAILS
805001-01	ELECTRICAL SERVICE INSTALLATION DETAILS
821101-03	LUMINAIRE WIRING IN POLE
825026-04	LIGHTING CONTROLLER, BASE MOUNTED, 480V
830001-03	LIGHT POLE ALUMINUM MAST ARM
836001-05	LIGHT POLE FOUNDATION
838001-01	BREAKAWAY DEVICES
886001-01	DETECTOR LOOP INSTALLATIONS
886006-01	TYPICAL LAYOUT FOR DETECTION LOOPS

MODEL: Unnamed Plan - Plan 1 [Sheet]
FILE NAME: S:\2021\21L007 - PTB 199-30 D8 - Willett Hofmann - Various Ph I-II\WO 4 I-64 Resurfacing\CADD\CADD Sheets\D876R99-sht-gennote.dgn

QUIGG ENGINEERING INC

USER NAME = rgoertz	DESIGNED - TO	REVISED -
	DRAWN - TO	REVISED -
PLOT SCALE = 0.16666633 ' / in.	CHECKED - SMK	REVISED -
PLOT DATE = 2/3/2025	DATE - 12/02/2024	REVISED -

STATE OF ILLINOIS
DEPARTMENT OF TRANSPORTATION

INDEX OF SHEETS & HIGHWAY STANDARDS

SCALE: | SHEET 1 OF 3 SHEETS | STA. | TO STA.

F.A.I RTE.	SECTION	COUNTY	TOTAL SHEETS	SHEET NO.
64	82-(4,5,6,7)-1RS-2	ST. CLAIR	388	2
		CONTRACT NO. 76R99		
	ILLINOIS FED. AID PROJECT			

GENERAL NOTES

1. UTILITIES KNOWN TO HAVE FACILITIES WITHIN THE PROJECT AREA:
   AMEREN ILLINOIS, WEST BOULEVARD, BELLEVILLE, IL 62221-4169

   AT&T, 1420 FRONTAGE RD, O'FALLON, IL 62269

   BUCKEYE PARTNERS L.P.-WOOD RIVER PIPELINE, 220E HAWTHORNE ST, HARTFORD, IL 62048

   VILLAGE OF CASEYVILLE, 909 S MAIN ST, CASEYVILLE, IL 62232

   CHARTER COMMUNICATIONS, INC, 7645 MAGNA DR, SUITE 100, BELLEVILLE, IL 62223

   CLEARWAVE FIBER LLC, TWO N VINE ST, 2ND FLOOR, PO BOX 808, HARRISBURGE, IL 62946

   EVERSTREAM GLC HOLDING COMPANY LLC, 1228 EUCLID AVE, SUITE 250, CLEVELAND, OH 44115

   EXTENET SYSTEMS, INC, 3030 WARRENVILLE RD, SUITE 340, LISLE, IL 60532

   CITY OF FAIRVIEW HEIGHTS, 10025 BUNKUM RD, FAIRVIEW HEIGHTS, IL 62208

   FIDELITY COMMUNICATIONS III, INC, 64 CLARK ST, SULLIVAN, MO 63080

   VERIZON BUSINESS, 900 WALNUT ST, 6TH FLOOR, ST LOUIS, MO 63102

   CITY OF O'FALLON, 255 S LINCOLN AVE, O'FALLON, IL 62269-2139

   WINDSTREAM KDL, INC, 102 E SHAFER ST, FORSYTH, IL 62535

2. THE FOLLOWING MIXTURE REQUIREMENTS ARE APPLICABLE FOR THIS PROJECT:

HOT-MIX ASPHALT MIXTURE REQUIREMENTS

MIXTURES USE(S)	POLY SURFACE	POLY BINDER	SHOULDER SURFACE	SHOULDER BINDER
AC/PG:	SBS PG 70-28	SBS PG 70-28	PG 64-22	PG 64-22
RAP % (MAX)				
DESIGN AIR VOIDS:	4.0% @ NDES=80	4.0% @ NDES=80	4.0% @ NDES=80	4.0% @ NDES=80
MIXTURE COMPOSITION: (GRADATION MIXTURE)	SMA 12.5	SMA 12.5	IL 9.5L	IL 19.0L
FRICTION AGGREGATE:	MIXTURE "E"	MIXTURE "E"		
QUALITY MANAGAMENT PROGRAM:	PFP	PFP	QCP	QCP
MATERIAL TRANSFER DEVICE (REQUIRED)?	YES	YES	YES	YES

NOTE:
FOR DESIGN PURPOSES, MIXTURE WEIGHT FOR ALL MIXES IS DETERMIMED TO BE 112.0 LBS/SQ YD/IN UNLESS OTHERWISE NOTED.

3. ALL PATCHING ON THIS PROJECT SHALL BE COMPLETED PRIOR TO HMA SURFACE REMOVAL.

4. ONLY SHORT TERM PAVEMENT MARKING REMOVAL FROM THE FINAL SURFACE SHALL BE PAID FOR AS " SHORT TERM PAVEMENT MARKING REMOVAL".

5. THE INTENT OF MILLING IS TO REMOVE THE HMA RESURFACING ONLY. THE UNDERLYING CONCRETE SHALL NOT BE DISTURBED.

6. NO TRAFFIC SHALL BE ALLOWED TO DRIVE ON THE EXISTING CONCRETE PAVEMENT.

7. THE CONTRACTOR SHALL PROVIDE POSITIVE AND ADEQUATE DRAINAGE AT ALL LOCATIONS AT ALL TIMES. THIS MAY INCLUDE, BUT IS NOT LIMITED TO, REPLACEMENT OR RECONSTRUCTION OF EXISTING DRAINAGE STRUCTURES THAT HAVE BEEN DAMAGED OR REMOVED, REGRADING, PLUGGING ABANDONED PIPES, OR OTHER ACTIVITIES REQUIRED BY THE ENGINEER.

8. THE DEPARTMENT STRONGLY ENCOURAGES THE PRIME CONTRACTOR AND THEIR APPROVED SUB-CONTRACTORS TO HIRE MINORITY, WOMEN AND DISADVANTAGED INDIVIDUALS FROM ITS FEDERALLY FUNDED HIGHWAY CONSTRUCTION CAREERS TRAINING PROGRAM (HCCTP) TO HELP MEET WORKFORCE AND TRAINEE GOALS. THIS PROGRAM IS TRAINING MINORITIES, WOMAN AND DISADVANTAGED INDIVIDUALS IN HIGHWAY CONSTRUCTION - RELATED SKILLS, E.G., MATH FOR THE TRADES. JOB READINESS, TECHNICAL SKILLS COURSEWORK (CARPENTRY, CONCRETE FLATWORK, BLUEPRINT READING, SITE PLANS, SITE WORK TOOLS USE, ETC.) AND OSHA 10 HOUR CERTIFICATION. TO PREPARE THEM FOR A CAREER IN THE HIGHWAY CONSTRUCTION TRADES. GRADUATES ARE WELL-TRAINED AND READY TO BECOME PRODUCTIVE ENRTY-LEVEL CONSTRUCTION WORKERS. CONTACT THE DISTRICT 8 EEO OFFICE AT 618-346-3360 AND/OR THE HCCTP COORDINATOR AT 618-874-6528 TO LEARN MORE ABOUT THE PROGRAM AND FOR ASSISTANCE IN MEETING WORKFORCE AND TRAINEE GOALS.

9. STRUCTURES WITHIN THE PROJECT LIMITS MAY BE CROSSED WITH AN EMPTY MTD WITH 40 TONS MAXIMUM GROSS WEIGHT RESTRICTIONS.

10. EIGHT (8) CHANGEABLE MESSAGE SIGNS SHALL BE REQUIRED FOR THIS PROJECT. THEY SHALL BE PLACED TWO WEEKS PRIOR TO ANY LANE CLOSURE. THE CHANGEABLE MESSAGE SIGNS SHALL BE PLACE ALONG 1-64, IL 157, IL 159 AND W HWY 59 OR AS DIRECTED BY THE ENGINEER.

11. NO SURVEY WAS PERFORMED FOR THIS PROJECT AND THE PLANS WERE CREATED USING MICROFILM AND FIELD MEASUREMENTS.

12. SHOULDER REMOVAL AND REPLACEMENT IS INTENDED FOR ALL AREAS OF PIPE UNDERDRAIN REMOVAL TRENCH. ALL SHOULDER PAVEMENT REPLACEMENT SHALL MATCH THICKNESS OF THE EXISTING PAVEMENT SHOULDER.

13. ALL PIPE UNDERDRAIN TRENCHES SHALL BE BACKFILLED WITH CA16 ONLY. THE TRENCH SHALL BE BACKFILLED UP TO THE BOTTOM OF THE EXISTING SHOULDER PAVEMENT SECTION. THIS AGGREGATE BACKFILL WILL BE INCLUDED IN THE PAY ITEMS FOR PIPE UNDERDRAINS.

MODEL: Unnamed Plan - Plan 2 [Sheet]
FILE NAME: S:\2021\21IL007 - PTB 199-30 D8 - Willett Hofmann - Various Ph I-IIWO 4 I-64 Resurfacing\CADD\CADD Sheets\D876R99-sht-genmote.dgn

GENERAL NOTES

14. IF THE CONTRACTOR, FOR HIS CONSTRUCTION ACTIVITY, REMOVES TREES WITHIN THE RIGHT-OF-WAY LIMITS WHICH ARE NOT DESIGNATED ON THE PLANS FOR REMOVAL, I.E. IN ORDER TO GAIN ACCESS TO THE PROJECT SITE; IT WILL BE HIS RESPONSIBILITY TO REPLACE THE TREES AT A 1 :1 RATIO. THE TREES WILL BE REPLACED WITH A 1 GALLON NATIVE ILLINOIS TREE SPECIES AND SHALL BE APPROVED BY THE ENGINEER. THE TREE REMOVAL AND TREE REPLACEMENT WILL BE AT THE CONTRACTOR'S EXPENSE, AND NO ADDITIONAL COMPENSATION WILL BE ALLOWED.

15. THE RESIDENT ENGINEER SHALL VERIFY THE EXISTANCE OF HIGHWAY LIGHTING, INTELLIGENT TRANSPORTATION SYSTEM (I.T.S.) UTILITIES, AND/OR ELECTRICAL CABLES ASSOCIATED WITH TRAFFIC SIGNALS WITHIN THE PROJECT LIMITS. IF ANY OF THESE EXIST WITHIN THE PROJECT LIMITS, AND IF THESE ITEMS REQUIRE LOCATING, THE CONTRACTOR SHALL BE DIRECTED TO DO SO ACCORDING TO SECTION 803 OF THE STANDARD SPECIFICATIONS. THIS WORK SHALL BE PAID FOR ACCORDING TO ARTICLE 109.04 OF THE STANDARD SPECIFICATIONS.

16. FACTORS FOR ESTIMATING PLAN QUANTITIES ARE AS FOLLOWS AND SHALL NOT BE USED FOR THE BASIS OF FINAL QUANTITIES:

AGGREGATE (SURFACE, BASE, & BACKFILL)	2.0 TON/CU YD
BITUMINOUS MATERIALS:	
PRIME COAT FOR BITUMINOUS CONCRETE	
-ON PAVEMENT	0.0002 TON/SQ YD
-ON AGGREGATE	0.002 TONS/SQ YD
-ON COLD MILLED SURFACE	0.0004 TONS/SQ YD
-FOG COAT ON NEW BINDER	0.00012 TON/SQ YD
AGGREGATE (PRIME COAT)	
-ON EXISTING PAVEMENT	0.002 TON/SQ YD
-ON COLD MILLED SURFACE	0.002 TONS/SQ YD
-FOG COAT ON NEW BINDER	0.001 TONS/SQ YD
RIP RAP	1.5 TON/CU YD
CRACK ROUTING	0.4 LBS/FT

17. PERTINENT INFORMATION
THE CONTRACTOR SHALL BE AWARE THAT THE FOLLOWING PROJECT(S) WITHIN OR ADJACENT TO THE LIMITS OF THIS CONTRACT SECTION MAY BE UNDER CONSTRUCTION DURING CONSTRUCTION OPERATIONS FOR THIS CONTRACT:
FAI 64 (I-64)
SECTION 82-7WRS-2
ST. CLAIR COUNTY
D-98-108-20
CONTRACT # 76K74
WIDENING, RESURFACING, AND BRIDGE REPAIR OF I-64 FROM WEST OF GREENMOUNT RD. TO 1.1 MILE WEST OF IL ROUTE 158.

18. THE CONTRACTOR SHALL VERIFY ALL DIMENSIONS AND CONDITIONS IN THE FIELD PRIOR TO CONSTRUCTION AND ORDERING MATERIALS.

19. EXISTING STRUCTURE PLANS ARE AVAILABLE FOR REVIEW IN THE DISTRICT OFFICE. EXISTING PLANS WILL ALSO BE PROVIDED AS AN INDIVIDUAL INFORMATION PACKET. CONTACT SCOTT NALL AT (618) 346-3181. REINFORCEMENT BARS DESIGNATED (E) SHALL BE EPOXY COATED.

20. PLAN DIMENSIONS AND DETAILS RELATIVE TO THE EXISTING STRUCTURE HAVE BEEN TAKEN FROM EXISTING PLANS ARE SUBJECT TO NOMINAL CONSTRUCTION VARIATIONS. THE CONTRACTOR SHALL FIELD VERIFY EXISTING DIMENSIONS AND DETAILS AFFECTING NEW CONSTRUCTION AND MAKE NECESSARY APPROVED ADJUSTMENTS PRIOR TO CONSTRUCTION OR ORDERING OF MATERIALS. SUCH VARIATIONS SHALL NOT BE CAUSE FOR ADDITIONAL COMPENSATION FOR A CHANGE IN SCOPE OF THE WORK, HOWEVER, THE CONTRACTOR WILL BE PAID FOR THE QUANTITY ACTUALLY FURNISHED AT THE UNIT PRICE BID FOR THE WORK.

21. CLEANING AND PAINTING OF THE EXISTING STEEL STRUCTURAL STEEL IS REQUIRED FOR S.N. 082-0174, 0175, 0176, AND 0179 AND SHALL BE PERFORMED AS SPECIFIED IN THE SPECIAL PROVISIONS FOR "CLEANING AND PAINTING EXISTING STEEL STRUCTURES." ALL BEAMS, BEARINGS AND OTHER STRUCTURAL STEEL WITHIN 5FT (MEASURED ALONG THE BEAM) OF EITHER SIDE OF DECK JOINTS SHALL BE CLEANED PER NEAR WHITE BLAST CLEANING -SSPC-SP10. THE EXTERIOR SURFACES AND BOTTOM OF THE BOTTOM FLANGE OF THE FASCIA BEAMS SHALL BE CLEANED PER COMMERCIAL GRADE POWER TOOL CLEANING - SSPC 15.

22. THE DESIGNATED AREAS CLEANED PER NEAR WHITE BLAST CLEANING AND PER COMMERCIAL GRADE POWER TOOL CLEANING SHALL BE PAINTED ACCORDING TO THE REQUIREMENTS OF MOISTURE CURED URETHANE PAINT SYSTEM. THE COLOR OF THE FINAL FINISH COAT FOR ALL INTERIOR SURFACES SHALL BE GRAY, MUNSELL NO. 5B 7/1. THE COLOR OF THE FINAL FINISH COAT FOR THE EXTERIOR AND BOTTOM FLANGE OF THE FASCIA BEAMS SHALL MATCH THE EXISTING CONDITIONS OF EACH STRUCTURE. ALL STRUCTURES SHALL BE GRAY, MUNSELL NO. 5B 7/1 EXCEPT AS NOTED: S.N. 082-0176: FASCIA BEAMS SHALL BE INTERSTATE GREEN, MUNSELL NO. 7.5G 4/8.

23. SSPC QP1 CERTIFICATION IS REQUIRED FOR THIS CONTRACT.

24. BRIDGE DECK CONCRETE SEALER INCLUDES THE TOP OF DECKS, APPROACH SLABS, AND THE FRONT FACES AND TOPS OF CURBS AND PARAPETS.

25. ANY EXISTING PAVEMENT DETERMINED UNSUITABLE BY THE ENGINEER IN THE FIELD SHALL BE PATCHED PRIOR TO RESURFACING. THIS PATCHING SHALL BE PAID FOR PER ARTICLE 109.04 OF THE STANDARD SPECIFICATIONS FOR ROAD AND BRIDGE CONSTRUCTION.

COMMITMENTS

NONE

MODEL: Unnamed Plan - Plan 3 [Sheet]
FILE NAME: S:\2021\21IL007 - PTB 199-30 D8 - Willett Hofmann - Various Ph I\IWO 4 I-64 Resurfacing\CADD\CADD Sheets\D876R99-sht-gennote.dgn

90% FED
10% STATE

CODE NO.	ITEM	UNIT	TOTAL QUANTITY	CONSTRUCTION TYPE CODE								
				ROADWAY	BRIDGE	BRIDGE	BRIDGE	BRIDGE	BRIDGE	BRIDGE	BRIDGE	BRIDGE
				0005	0013	0013	0013	0013	0013	0013	0013	0013
				URBAN	S.N. 082-0174	S.N. 082-0175	S.N. 082-0176	S.N. 082-0179	S.N. 082-0306 (EB)	S.N. 082-0307 (WB)	S.N. 082-308 (EB)	S.N. 082-309 (WB)
20900110	POROUS GRANULAR BACKFILL	CU YD	2,329	2,329								
25000210	SEEDING, CLASS 2A	ACRE	14	14								
25000400	NITROGEN FERTILIZER NUTRIENT	POUND	1,278	1,278								
25000500	PHOSPHORUS FERTILIZER NUTRIENT	POUND	1,278	1,278								
25000600	POTASSIUM FERTILIZER NUTRIENT	POUND	1,278	1,278								
25100630	EROSION CONTROL BLANKET	SQ YD	68,411	68,411								
28000250	TEMPORARY EROSION CONTROL SEEDING	POUND	1,417	1,417								
28000400	PERIMETER EROSION BARRIER	FOOT	17,284	17,284								
28000500	INLET AND PIPE PROTECTION	EACH	351	351								
28100107	STONE RIPRAP, CLASS A4	SQ YD	30		30							
28200200	FILTER FABRIC	SQ YD	30		30							
35101600	AGGREGATE BASE COURSE, TYPE B 4"	SQ YD	4,217	4,217								
40600295	POLYMERIZED BITUMINOUS MATERIALS (TACK COAT)	POUND	362,492	362,492								
40600370	LONGITUDINAL JOINT SEALANT	FOOT	312,110	312,110								

MODEL: Unnamed Plan - Plan 1 [Sheet]
FILE NAME: S:\2021\21IL007 - PTB 198-30 D8 - Willett Hofmann - Various Ph III\WO 4 I-64 Resurfacing\CADD\CADD Sheets\D876R99-sht-SOQ.dgn

QUIGG ENGINEERING INC

USER NAME = rgoertz	DESIGNED - RG	REVISED -	
	DRAWN - RG	REVISED -	
PLOT SCALE = 0.16666633 ' / In.	CHECKED - SMK	REVISED -	
PLOT DATE = 2/3/2025	DATE - 12/02/2024	REVISED -	

STATE OF ILLINOIS
DEPARTMENT OF TRANSPORTATION

SUMMARY OF QUANTITIES
I-64

SCALE: NONE | SHEET 1 OF 12 SHEETS | STA. | TO STA.

F.A.I RTE.	SECTION	COUNTY	TOTAL SHEETS	SHEET NO.
64	82-(4,5,6,7)-1RS-2	ST. CLAIR	388	5
		CONTRACT NO. 76R99		
	ILLINOIS	FED. AID PROJECT		

90% FED
10% STATE

CODE NO.	ITEM	UNIT	TOTAL QUANTITY	CONSTRUCTION TYPE CODE								
				ROADWAY	BRIDGE	BRIDGE	BRIDGE	BRIDGE	BRIDGE	BRIDGE	BRIDGE	BRIDGE
				0005	0013	0013	0013	0013	0013	0013	0013	0013
				URBAN	S.N. 082-0174	S.N. 082-0175	S.N. 082-0176	S.N. 082-0179	S.N. 082-0306 (EB)	S.N. 082-0307 (WB)	S.N. 082-308 (EB)	S.N. 082-309 (WB)
40600405	MATERIAL TRANSFER DEVICE	TON	153,649	153,649								
40605015	POLYMERIZED HOT-MIX ASPHALT BINDER COURSE, STONE MATRIX ASPHALT 12.5, N80	TON	59,512	59,512								
40605034	POLYMERIZED HOT-MIX ASPHALT SURFACE COURSE, STONE MATRIX ASPHALT, 12.5, MIX "E", N8	TON	39,678	39,678								
44000169	HOT-MIX ASPHALT SURFACE REMOVAL, 5"	SQ YD	537,025	537,025								
44000300	CURB REMOVAL	FOOT	13,054	13,054								
44004250	PAVED SHOULDER REMOVAL	SQ YD	3,653	3,653								
44201031	CLASS B PATCHES, TYPE II, 15 INCH	SQ YD	26	26								
44201299	DOWEL BARS 1 1/2"	EACH	28	28								
44213200	SAW CUTS	FOOT	92	92								
48101500	AGGREGATE SHOULDERS, TYPE B 6"	SQ YD	368	368								
48102100	AGGREGATE WEDGE SHOULDER, TYPE B	TON	6,388	6,388								
48203100	HOT-MIX ASPHALT SHOULDERS	TON	51,719	51,719								
50102400	CONCRETE REMOVAL	CU YD	92.7		9.2		47.2	36.2			0.05	0.05
50105220	PIPE CULVERT REMOVAL	FOOT	40		20			20				

MODEL: Unnamed Plan - Plan 2 [Sheet]
FILE NAME: S:\2021\21IL007 - PTB 198-30 D8 - Willett Hofmann - Various Ph III\WO 4 I-64 Resurfacing\CADD\CADD Sheets\D876R99-sht-SOQ.dgn

QUIGG ENGINEERING INC

USER NAME = rgoertz	DESIGNED - RG	REVISED -	
	DRAWN - RG	REVISED -	
PLOT SCALE = 0.16666633 ' / In.	CHECKED - SMK	REVISED -	
PLOT DATE = 2/3/2025	DATE - 12/02/2024	REVISED -	

STATE OF ILLINOIS
DEPARTMENT OF TRANSPORTATION

SUMMARY OF QUANTITIES
I-64

SCALE: NONE | SHEET 2 OF 12 SHEETS | STA. | TO STA.

F.A.I RTE.	SECTION	COUNTY	TOTAL SHEETS	SHEET NO.
64	82-(4,5,6,7)-1RS-2	ST. CLAIR	388	6
		CONTRACT NO. 76R99		
	ILLINOIS	FED. AID PROJECT		

CODE NO.	ITEM	UNIT	TOTAL QUANTITY (90% FED 10% STATE)	CONSTRUCTION TYPE CODE								
				ROADWAY	BRIDGE	BRIDGE	BRIDGE	BRIDGE	BRIDGE	BRIDGE	BRIDGE	BRIDGE
				0005	0013	0013	0013	0013	0013	0013	0013	0013
				URBAN	S.N. 082-0174	S.N. 082-0175	S.N. 082-0176	S.N. 082-0179	S.N. 082-0306 (EB)	S.N. 082-0307 (WB)	S.N. 082-308 (EB)	S.N. 082-309 (WB)
50157300	PROTECTIVE SHIELD	SQ YD	6,150		975	891	1,896	2,388				
50300100	FLOOR DRAINS	EACH	14		4	4		4			1	1
50300255	CONCRETE SUPERSTRUCTURE	CU YD	91.6		9.2		47.2	35.1			0.05	0.05
50800205	REINFORCEMENT BARS, EPOXY COATED	POUND	10,160		1,250		2,240	6,670				
50800515	BAR SPLICERS	EACH	116		12		48	56				
52000110	PREFORMED JOINT STRIP SEAL	FOOT	576		116		219	241				
54261712	STEEL FLARED END SECTIONS 12"	EACH	2		1			1				
60100070	SHOULDER REMOVAL AND REPLACEMENT	FOOT	74,225	74,225								
60100945	PIPE DRAINS 12"	FOOT	40		20			20				
60108106	PIPE UNDERDRAINS, TYPE 1, 6"	FOOT	72,395	72,395								
60108200	PIPE UNDERDRAINS 6" (SPECIAL)	FOOT	4,575	4,575								
60605000	COMBINATION CONCRETE CURB AND GUTTER, TYPE B-6.24	FOOT	14,898	14,898								
60618300	CONCRETE MEDIAN SURFACE, 4 INCH	SQ FT	31,429	31,429								
*63000001	STEEL PLATE BEAM GUARDRAIL, TYPE A, 6 FOOT POSTS	FOOT	14,525	14,525								

* SPECIALTY ITEM

CODE NO.	ITEM	UNIT	TOTAL QUANTITY (90% FED 10% STATE)	CONSTRUCTION TYPE CODE								
				ROADWAY	BRIDGE	BRIDGE	BRIDGE	BRIDGE	BRIDGE	BRIDGE	BRIDGE	BRIDGE
				0005	0013	0013	0013	0013	0013	0013	0013	0013
				URBAN	S.N. 082-0174	S.N. 082-0175	S.N. 082-0176	S.N. 082-0179	S.N. 082-0306 (EB)	S.N. 082-0307 (WB)	S.N. 082-308 (EB)	S.N. 082-309 (WB)
*63100045	TRAFFIC BARRIER TERMINAL, TYPE 2	EACH	10	10								
*63100085	TRAFFIC BARRIER TERMINAL, TYPE 6	EACH	6	6								
*63100167	TRAFFIC BARRIER TERMINAL, TYPE 1 (SPECIAL) TANGENT	EACH	12	12								
63200310	GUARDRAIL REMOVAL	FOOT	13,856	13,856								
*63302700	REMOVE AND REERECT TRAFFIC BARRIER TERMINALS, TYPE 6	EACH	2						1	1		
64200116	SHOULDER RUMBLE STRIPS, 16 INCH	FOOT	139,358	139,358								
67000400	ENGINEER'S FIELD OFFICE, TYPE A	CAL MO	24	24								
67100100	MOBILIZATION	L SUM	1		0.20	0.20	0.20	0.20	0.05	0.05	0.05	0.05
70100207	TRAFFIC CONTROL AND PROTECTION, STANDARD 701402	EACH	8						2	2	2	2
70100325	TRAFFIC CONTROL AND PROTECTION, STANDARD 701423	EACH	2					2				
70100405	TRAFFIC CONTROL AND PROTECTION, STANDARD 701321	EACH	4		2	2						
70100420	TRAFFIC CONTROL AND PROTECTION, STANDARD 701411	EACH	42	42								
70100450	TRAFFIC CONTROL AND PROTECTION, STANDARD 701201	L SUM	1	1								
70100700	TRAFFIC CONTROL AND PROTECTION, STANDARD 701406	L SUM	1	1								

* SPECIALTY ITEM

MODEL: Unnamed Plan - Plan 4 [Sheet]
FILE NAME: S:\2021\21IL007 - PTB 198-30 D8 - Willett Hofmann - Various Ph III\WO 4 I-64 Resurfacing\CADD\CADD Sheets\D876R99-sht-SOQ.dgn

QUIGG ENGINEERING INC

USER NAME = rgoertz	DESIGNED - RG	REVISED -	
	DRAWN - RG	REVISED -	
PLOT SCALE = 0.16666633 ' / In.	CHECKED - SMK	REVISED -	
PLOT DATE = 2/3/2025	DATE - 12/02/2024	REVISED -	

STATE OF ILLINOIS
DEPARTMENT OF TRANSPORTATION

SUMMARY OF QUANTITIES
I-64

SCALE: NONE | SHEET 4 OF 12 SHEETS | STA. | TO STA.

F.A.I RTE.	SECTION	COUNTY	TOTAL SHEETS	SHEET NO.
64	82-(4,5,6,7)-1RS-2	ST. CLAIR	388	8
		CONTRACT NO. 76R99		
	ILLINOIS	FED. AID PROJECT		

CODE NO.	ITEM	UNIT	TOTAL QUANTITY (90% FED 10% STATE)	CONSTRUCTION TYPE CODE								
				ROADWAY	BRIDGE	BRIDGE	BRIDGE	BRIDGE	BRIDGE	BRIDGE	BRIDGE	BRIDGE
				0005	0013	0013	0013	0013	0013	0013	0013	0013
				URBAN	S.N. 082-0174	S.N. 082-0175	S.N. 082-0176	S.N. 082-0179	S.N. 082-0306 (EB)	S.N. 082-0307 (WB)	S.N. 082-308 (EB)	S.N. 082-309 (WB)
70100800	TRAFFIC CONTROL AND PROTECTION, STANDARD 701401	L SUM	1	1								
70100815	TRAFFIC CONTROL AND PROTECTION, STANDARD 701446	L SUM	1	1								
70100825	TRAFFIC CONTROL AND PROTECTION, STANDARD 701456	L SUM	1	1								
70102625	TRAFFIC CONTROL AND PROTECTION, STANDARD 701606	L SUM	1						0.50	0.50		
70103815	TRAFFIC CONTROL SURVEILLANCE	CAL DA	60	60								
70106500	TEMPORARY BRIDGE TRAFFIC SIGNALS	EACH	2	2								
70106700	TEMPORARY RUMBLE STRIPS	EACH	24	24								
70107025	CHANGEABLE MESSAGE SIGN	CAL DA	633	365	14	14	35	45	40	40	40	40
70200100	NIGHTTIME WORK ZONE LIGHTING	L SUM	1	1								
70300100	SHORT TERM PAVEMENT MARKING	FOOT	7,597	7,597								
70300150	SHORT TERM PAVEMENT MARKING REMOVAL	SQ FT	31,684	31,684								
70300211	TEMPORARY PAVEMENT MARKING LETTERS AND SYMBOLS - PAINT	SQ FT	588	588								
70300221	TEMPORARY PAVEMENT MARKING - LINE 4"- PAINT	FOOT	14,548	14,548								
70300241	TEMPORARY PAVEMENT MARKING - LINE 6"- PAINT	FOOT	222,054	222,054								

90% FED
10% STATE

CODE NO.	ITEM	UNIT	TOTAL QUANTITY	CONSTRUCTION TYPE CODE								
				ROADWAY	BRIDGE	BRIDGE	BRIDGE	BRIDGE	BRIDGE	BRIDGE	BRIDGE	BRIDGE
				0005	0013	0013	0013	0013	0013	0013	0013	0013
				URBAN	S.N. 082-0174	S.N. 082-0175	S.N. 082-0176	S.N. 082-0179	S.N. 082-0306 (EB)	S.N. 082-0307 (WB)	S.N. 082-308 (EB)	S.N. 082-309 (WB)
70300251	TEMPORARY PAVEMENT MARKING - LINE 8"- PAINT	FOOT	11,221	11,221								
70300261	TEMPORARY PAVEMENT MARKING - LINE 12"- PAINT	FOOT	13,370	13,370								
70307100	TEMPORARY PAVEMENT MARKING LETTERS AND SYMBOLS - TYPE IV TAPE	SQ FT	111	111								
70307120	TEMPORARY PAVEMENT MARKING - LINE 4" - TYPE IV TAPE	FOOT	30,901	30,901								
70307130	TEMPORARY PAVEMENT MARKING - LINE 6" - TYPE IV TAPE	FOOT	40,612	40,612								
70307160	TEMPORARY PAVEMENT MARKING - LINE 12"- TYPE IV TAPE	FOOT	132	132								
70400100	TEMPORARY CONCRETE BARRIER	FOOT	5,187.5		550.0	450.0	750.0	1,100.0	650.0	612.5	525.0	550.0
70400125	PINNING TEMPORARY CONCRETE BARRIER	EACH	864						228	228	204	204
70400200	RELOCATE TEMPORARY CONCRETE BARRIER	FOOT	4,862.5		550	450.0	662.5	1,100.0	550.0	537.5	512.5	500.0
70600260	IMPACT ATTENUATORS, TEMPORARY (FULLY REDIRECTIVE, NARROW), TEST LEVEL 3	EACH	12	12								
70600332	IMPACT ATTENUATORS, RELOCATE (FULLY REDIRECTIVE, NARROW), TEST LEVEL 3	EACH	12	12								
*72000100	SIGN PANEL - TYPE 1	SQ FT	203.5	203.5								
*72000200	SIGN PANEL - TYPE 2	SQ FT	261.7	261.7								
*72000300	SIGN PANEL - TYPE 3	SQ FT	8,049	8,049								

* SPECIALTY ITEM

CODE NO.	ITEM	UNIT	TOTAL QUANTITY (90% FED 10% STATE)	CONSTRUCTION TYPE CODE								
				ROADWAY	BRIDGE	BRIDGE	BRIDGE	BRIDGE	BRIDGE	BRIDGE	BRIDGE	BRIDGE
				0005	0013	0013	0013	0013	0013	0013	0013	0013
				URBAN	S.N. 082-0174	S.N. 082-0175	S.N. 082-0176	S.N. 082-0179	S.N. 082-0306 (EB)	S.N. 082-0307 (WB)	S.N. 082-308 (EB)	S.N. 082-309 (WB)
*72400100	REMOVE SIGN PANEL ASSEMBLY - TYPE A	EACH	41	41								
*72400200	REMOVE SIGN PANEL ASSEMBLY - TYPE B	EACH	11	11								
*72400330	REMOVE SIGN PANEL - TYPE 3	SQ FT	7,516	7,516								
*72501000	TERMINAL MARKER - DIRECT APPLIED	EACH	12	12								
*72600100	MILE POST MARKER ASSEMBLY	EACH	33	33								
*72700100	STRUCTURAL STEEL SIGN SUPPORT - BREAKAWAY	POUND	40,602	40,602								
*72800100	TELESCOPING STEEL SIGN SUPPORT	FOOT	732.5	732.5								
*72900100	METAL POST - TYPE A	FOOT	695.5	695.5								
*73000100	WOOD SIGN SUPPORT	FOOT	413	413								
*73400100	CONCRETE FOUNDATIONS	CU YD	103	103								
73700100	REMOVE GROUND MOUNTED SIGN SUPPORT	EACH	69	69								
73700200	REMOVE CONCRETE FOUNDATION - GROUND MOUNT	EACH	61	61								
*78000100	THERMOPLASTIC PAVEMENT MARKING - LETTERS AND SYMBOLS	SQ FT	588	588								
*78000600	THERMOPLASTIC PAVEMENT MARKING - LINE 12"	FOOT	13,370	13,370								

* SPECIALTY ITEM

MODEL: Unnamed Plan - Plan 7 [Sheet]
FILE NAME: S:\2021\21IL007 - PTB 198-30 D8 - Willett Hofmann - Various Ph III\WO 4 I-64 Resurfacing\CADD\CADD Sheets\D876R99-sht-SOQ.dgn

QUIGG ENGINEERING INC

USER NAME = rgoertz	DESIGNED - RG	REVISED -	
	DRAWN - RG	REVISED -	
PLOT SCALE = 0.16666633 ' / In.	CHECKED - SMK	REVISED -	
PLOT DATE = 2/3/2025	DATE - 12/02/2024	REVISED -	

STATE OF ILLINOIS
DEPARTMENT OF TRANSPORTATION

SUMMARY OF QUANTITIES
I-64

SCALE: NONE | SHEET 7 OF 12 SHEETS | STA. | TO STA.

F.A.I RTE.	SECTION	COUNTY	TOTAL SHEETS	SHEET NO.
64	82-(4,5,6,7)-1RS-2	ST. CLAIR	388	11
		CONTRACT NO. 76R99		
	ILLINOIS	FED. AID PROJECT		

CODE NO.	ITEM	UNIT	TOTAL QUANTITY (90% FED 10% STATE)	CONSTRUCTION TYPE CODE								
				ROADWAY	BRIDGE	BRIDGE	BRIDGE	BRIDGE	BRIDGE	BRIDGE	BRIDGE	BRIDGE
				0005	0013	0013	0013	0013	0013	0013	0013	0013
				URBAN	S.N. 082-0174	S.N. 082-0175	S.N. 082-0176	S.N. 082-0179	S.N. 082-0306 (EB)	S.N. 082-0307 (WB)	S.N. 082-308 (EB)	S.N. 082-309 (WB)
*78004630	PREFORMED PLASTIC PAVEMENT MARKING, TYPE D - STANDARD - LINE 6"	FOOT	222,054	222,054								
*78004640	PREFORMED PLASTIC PAVEMENT MARKING, TYPE D - STANDARD - LINE 8"	FOOT	11,221	11,221								
*78011035	GROOVING FOR RECESSED PAVEMENT MARKING 7"	FOOT	258,025	258,025								
*78011045	GROOVING FOR RECESSED PAVEMENT MARKING 9"	FOOT	10,841	10,841								
*78100100	RAISED REFLECTIVE PAVEMENT MARKER	EACH	4,264	4,264								
*78200006	GUARDRAIL REFLECTORS, TYPE B	EACH	114	114								
*78200011	BARRIER WALL REFLECTORS, TYPE C	EACH	212	212								
78300200	RAISED REFLECTIVE PAVEMENT MARKER REMOVAL	EACH	4,264	4,264								
78300202	PAVEMENT MARKING REMOVAL - WATER BLASTING	SQ FT	74,277	74,277								
*80400100	ELECTRIC SERVICE INSTALLATION	EACH	6	6								
*81028240	UNDERGROUND CONDUIT, GALVANIZED STEEL, 4" DIA.	FOOT	1,764	1,764								
*81603040	UNIT DUCT, 600V, 2-1C NO.6, 1/C NO.8 GROUND, (XLP-TYPE USE), 1" DIA. POLYETHYLENE	FOOT	53,121	53,121								
*81702160	ELECTRIC CABLE IN CONDUIT, 600V (XLP-TYPE USE) 1/C NO. 1/0	FOOT	2,127	2,127								
*82110008	LUMINAIRE, LED, ROADWAY, OUTPUT DESIGNATION H	EACH	211	211								

* SPECIALTY ITEM

CODE NO.	ITEM	UNIT	TOTAL QUANTITY (90% FED 10% STATE)	CONSTRUCTION TYPE CODE								
				ROADWAY	BRIDGE	BRIDGE	BRIDGE	BRIDGE	BRIDGE	BRIDGE	BRIDGE	BRIDGE
				0005	0013	0013	0013	0013	0013	0013	0013	0013
				URBAN	S.N. 082-0174	S.N. 082-0175	S.N. 082-0176	S.N. 082-0179	S.N. 082-0306 (EB)	S.N. 082-0307 (WB)	S.N. 082-308 (EB)	S.N. 082-309 (WB)
*82500360	LIGHTING CONTROLLER, BASE MOUNTED, 480VOLT, 100AMP	EACH	6	6								
*83010600	LIGHT POLE, ALUMINUM, 50 FT. M.H., 15 FT. MAST ARM	EACH	211	211								
*83600300	LIGHT POLE FOUNDATION, 30" DIAMETER	FOOT	1,477	1,477								
*83800205	BREAKAWAY DEVICE, TRANSFORMER BASE, 15 INCH BOLT CIRCLE	EACH	211	211								
84200600	REMOVAL OF LIGHTING UNIT, NO SALVAGE	EACH	193	193								
84200804	REMOVAL OF POLE FOUNDATION	EACH	193	193								
84500110	REMOVAL OF LIGHTING CONTROLLER	EACH	5	5								
84500120	REMOVAL OF ELECTRIC SERVICE INSTALLATION	EACH	5	5								
84500130	REMOVAL OF LIGHTING CONTROLLER FOUNDATION	EACH	5	5								
Z0006016	BRIDGE DECK LATEX CONCRETE OVERLAY, 2 3/4 INCHES	SQ YD	2,868					2,868				
Z0006021	BRIDGE DECK LATEX CONCRETE OVERLAY, 3 1/4 INCHES	SQ YD	2,042				2,042					
Z0007104	CONTAINMENT AND DISPOSAL OF LEAD PAINT CLEANING RESIDUES NO. 4	L SUM	1			1						
Z0007108	CONTAINMENT AND DISPOSAL OF LEAD PAINT CLEANING RESIDUES NO. 8	L SUM	1					1				
Z0007122	REMOVING AND RE-ERECTING EXISTING RAILING	FOOT	157		77			80				

* SPECIALTY ITEM

CODE NO.	ITEM	UNIT	TOTAL QUANTITY (90% FED 10% STATE)	CONSTRUCTION TYPE CODE								
				ROADWAY	BRIDGE	BRIDGE	BRIDGE	BRIDGE	BRIDGE	BRIDGE	BRIDGE	BRIDGE
				0005	0013	0013	0013	0013	0013	0013	0013	0013
				URBAN	S.N. 082-0174	S.N. 082-0175	S.N. 082-0176	S.N. 082-0179	S.N. 082-0306 (EB)	S.N. 082-0307 (WB)	S.N. 082-308 (EB)	S.N. 082-309 (WB)
Z0010503	CLEANING AND PAINTING STEEL BRIDGE NO. 3	L SUM	1		1							
Z0010504	CLEANING AND PAINTING STEEL BRIDGE NO. 4	L SUM	1			1						
Z0010505	CLEANING AND PAINTING STEEL BRIDGE NO. 5	L SUM	1				1					
Z0010508	CLEANING AND PAINTING STEEL BRIDGE NO. 8	L SUM	1					1				
Z0012144	BRIDGE DECK SCARIFICATION 2 1/2"	SQ YD	2,868					2,868				
Z0012148	BRIDGE DECK SCARIFICATION 3"	SQ YD	2,042				2,042					
Z0012754	STRUCTURAL REPAIR OF CONCRETE (DEPTH EQUAL TO OR LESS THAN 5 INCHES)	SQ FT	2,785.0		165	1,312	508	800				
Z0012755	STRUCTURAL REPAIR OF CONCRETE (DEPTH GREATER THAN 5 INCHES)	SQ FT	341		30	100	51	160				
Z0012800	CONCRETE PAVEMENT SCARIFICATION	SQ YD	946						473	473		
Z0016001	DECK SLAB REPAIR (FULL DEPTH, TYPE I)	SQ YD	121		5	16	29	71				
Z0016002	DECK SLAB REPAIR (FULL DEPTH, TYPE II)	SQ YD	172		5	15	52	100				
Z0016200	DECK SLAB REPAIR (PARTIAL)	SQ YD	90		30	30			5	5	10	10
X7200203	DETOUR SIGNING	L SUM	1				1					
Z0021914	SILICONE JOINT SEALER, 2.75"	FOOT	92			92						

REV - MS

MODEL: Unnamed Plan - Plan 10 [Sheet]
FILE NAME: S:\2021\21L007 - PTB 198-30 DB - Willett Hofmann - Various Ph I-II\WO 4 I-64 Resurfacing\CADD\CADD Sheets\D876R99-ahl-SOQ.dgn

QUIGG ENGINEERING INC

USER NAME = rgoertz	DESIGNED - RG	REVISED -	
	DRAWN - RG	REVISED -	
PLOT SCALE = 0.16666633 ' / in.	CHECKED - SMK	REVISED -	
PLOT DATE = 2/3/2025	DATE - 12/02/2024	REVISED -	

STATE OF ILLINOIS
DEPARTMENT OF TRANSPORTATION

SUMMARY OF QUANTITIES
I-64

SCALE: NONE | SHEET 10 OF 12 SHEETS | STA. | TO STA.

F.A.I RTE.	SECTION	COUNTY	TOTAL SHEETS	SHEET NO.
64	82-(4,5,6,7)-1RS-2	ST. CLAIR	388	14
		CONTRACT NO. 76R99		
	ILLINOIS FED. AID PROJECT			

90% FED
10% STATE

CODE NO.	ITEM	UNIT	TOTAL QUANTITY	CONSTRUCTION TYPE CODE								
				ROADWAY	BRIDGE	BRIDGE	BRIDGE	BRIDGE	BRIDGE	BRIDGE	BRIDGE	BRIDGE
				0005	0013	0013	0013	0013	0013	0013	0013	0013
				URBAN	S.N. 082-0174	S.N. 082-0175	S.N. 082-0176	S.N. 082-0179	S.N. 082-0306 (EB)	S.N. 082-0307 (WB)	S.N. 082-308 (EB)	S.N. 082-309 (WB)
Z0029090	DIAMOND GRINDING (BRIDGE SECTION)	SQ YD	4,718				1,990	2,728				
Z0030910	TRANSFER SERVICE SIGN	EACH	89	89								
Z0040530	PIPE UNDERDRAIN REMOVAL	FOOT	74,179	74,179								
Z0052395	TIGHTEN U-BOLT	EACH	2	2								
Z0073200	TEMPORARY SHORING AND CRIBBING	EACH	2			2						
X0325748	ACRYLIC COATING	SQ YD	35				35					
X0326766	CLEAN & RESEAL RELIEF JOINT	FOOT	419						143	143	67	66
X0327775	ABUTMENT VAULT DOOR RETROFIT	EACH	2		1	1						
X2020108	GRADING AND SHAPING (SPECIAL)	SQ YD	68,582	68,582								
X5030250	BRIDGE DECK GROOVING (LONGITUDINAL)	SQ YD	3,912				1,825	2,087				
X5036003	CONCRETE HEADWALL (SPECIAL)	EACH	183	183								
X5060702	CLEANING AND PAINTING EXPOSED REBAR	L SUM	1		0.25	0.25	0.25	0.25				
X5210004	TIGHTEN BRIDGE PARAPET ANCHOR BOLTS	EACH	2	2								
X5210005	TIGHTEN SUPPORT ANCHOR BOLT	EACH	2	2								

MODEL: Unnamed Plan - Plan 11 [Sheet]
FILE NAME: S:\2021211L007 - PTB 199-30 D8 - Willett Hofmann - Various Ph I\IWO 4 I-64 Resurfacing\CADD\CADD Sheets\D876R99-smt-SOQ.dgn

QUIGG ENGINEERING INC

USER NAME = rgoertz	DESIGNED - TO	REVISED -	
	DRAWN - TO	REVISED -	
PLOT SCALE = 0.16666633 ' / in.	CHECKED - SMK	REVISED -	
PLOT DATE = 1/22/2025	DATE - 12/02/2024	REVISED -	

STATE OF ILLINOIS
DEPARTMENT OF TRANSPORTATION

SUMMARY OF QUANTITIES
I-64

SCALE: NONE | SHEET 11 OF 12 SHEETS | STA. 0+00.00 | TO STA. 45+00.00

F.A.I RTE.	SECTION	COUNTY	TOTAL SHEETS	SHEET NO.
64	82-(4,5,6,7)-1RS-2	ST. CLAIR	388	15
		CONTRACT NO. 76R99		
	ILLINOIS FED. AID PROJECT			

CODE NO.	ITEM	UNIT	TOTAL QUANTITY (90% FED 10% STATE)	CONSTRUCTION TYPE CODE								
				ROADWAY	BRIDGE	BRIDGE	BRIDGE	BRIDGE	BRIDGE	BRIDGE	BRIDGE	BRIDGE
				0005	0013	0013	0013	0013	0013	0013	0013	0013
				URBAN	S.N. 082-0174	S.N. 082-0175	S.N. 082-0176	S.N. 082-0179	S.N. 082-0306 (EB)	S.N. 082-0307 (WB)	S.N. 082-308 (EB)	S.N. 082-309 (WB)
X5870015	BRIDGE DECK CONCRETE SEALER	SQ FT	137,552		15,950	12,350	19,479	30,995	14,045	14,045	15,344	15,344
X6015000	REMOVE CONCRETE HEADWALLS FOR PIPE DRAINS	EACH	163	163								
X7010001	MOBILE BARRIER TRAILER	L SUM	1	1								
X7010118	TEMPORARY RUMBLE STRIPS (SPECIAL)	EACH	15	15								
X7010216	TRAFFIC CONTROL AND PROTECTION, (SPECIAL)	L SUM	1				1					
X7010239	CHANGEABLE MESSAGE SIGN (SPECIAL)	CAL WK	128	128								
X7011858	REAL-TIME TRAFFIC CONTROL SENSOR UNIT	WEEK	128	128								
*X7200085	REPLACE AND TIGHTEN SIGN MOUNTING CLIPS PER EACH SIGN	EACH	1	1								
X7200201	WIDTH RESTRICTION SIGNING	L SUM	1	1								
X7330066	REPAIR HANDRAIL LOCKING PIN CONNECTION	EACH	11	11								
*X7330068	TIGHTEN CANTILEVER CONNECTION	EACH	1	1								
X7330112	SAFETY CHAIN	EACH	1	1								
X8050204	REMOVE ELECTRIC SERVICE	EACH	7	7								
*X8140234	REPLACE HANDHOLE COVER	EACH	1	1								

* SPECIALTY ITEM

MODEL: Unnamed Plan - Plan 12 [Sheet]
FILE NAME: S:\2021\21IL007 - PTB 198-30 D8 - Willett Hofmann - Various Ph I\IIWO 4 I-64 Resurfacing\CADD\CADD Sheets\D876R99-sht-SOQ.dgn

QUIGG ENGINEERING INC

USER NAME = rgoertz	DESIGNED - TO	REVISED -	
	DRAWN - TO	REVISED -	
PLOT SCALE = 0.16666633 ' / In.	CHECKED - SMK	REVISED -	
PLOT DATE = 1/22/2025	DATE - 12/02/2024	REVISED -	

STATE OF ILLINOIS
DEPARTMENT OF TRANSPORTATION

SUMMARY OF QUANTITIES
I-64

SCALE: NONE | SHEET 12 OF 12 SHEETS | STA. | TO STA.

F.A.I RTE.	SECTION	COUNTY	TOTAL SHEETS	SHEET NO.
64	82-(4,5,6,7)-1RS-2	ST. CLAIR	388	16
		CONTRACT NO. 76R99		
	ILLINOIS	FED. AID PROJECT		

CODE NO.	ITEM	UNIT	TOTAL QUANTITY	90% FED 10% STATE	CONSTRUCTION TYPE CODE							
				ROADWAY	BRIDGE	BRIDGE	BRIDGE	BRIDGE	BRIDGE	BRIDGE	BRIDGE	BRIDGE
				0005	0013	0013	0013	0013	0013	0013	0013	0013
				URBAN	S.N. 082-0174	S.N. 082-0175	S.N. 082-0176	S.N. 082-0179	S.N. 082-0306 (EB)	S.N. 082-0307 (WB)	S.N. 082-308 (EB)	S.N. 082-309 (WB)
X8420506	REMOVAL OF EXISTING SIGN LIGHTING UNIT WITH NO SALVAGE	EACH	18	18								
X8570002	SMART TRAFFIC MONITORING SYSTEM	CAL WK	128	128								
X8570004	SMART TRAFFIC MONITORING DEVICE	CAL WK	128	128								
*X8860105	DETECTOR LOOP REPLACEMENT	FOOT	150	150								
X8950508	REMOVE CABLE FROM CONDUIT	FOOT	2,035	2,035								
*X8100106	INSTALL CONDUIT PLUGS	EACH	2	2								
ØZ0076600	TRAINEES	HOUR	4000	4000								
X7802002	UNDERDRAIN HEADWALL MARKER	EACH	183	183								
ØZ0076604	TRAINEES TRAINING PROGRAM GRADUATE	HOUR	4000	4000								

* SPECIALTY ITEM

Ø 0042

REV - MS

MODEL: Unnamed Plan - Plan 13 [Sheet]
FILE NAME: S:\2021\21IL007 - PTB 199-30 D8 - Willett Hofmann - Various Ph I-IIWO 4 I-64 Resurfacing\CADD\CADD Sheets\D876R99-sht-SOQ.dgn

QUIGG ENGINEERING INC

USER NAME = rgoertz	DESIGNED - TO	REVISED -	
	DRAWN - TO	REVISED -	
PLOT SCALE = 0.16666667 ' / in.	CHECKED - SMK	REVISED -	
PLOT DATE = 2/5/2025	DATE - 12/02/2024	REVISED -	

STATE OF ILLINOIS
DEPARTMENT OF TRANSPORTATION

SUMMARY OF QUANTITIES
I-64

SCALE: NONE | SHEET 12A OF 12 SHEETS | STA. | TO STA.

F.A.I. RTE.	SECTION	COUNTY	TOTAL SHEETS	SHEET NO.
64	82-(4,5,6,7)-1R-2	ST. CLAIR	388	16A
		CONTRACT NO. 76R99		
	ILLINOIS FED. AID PROJECT			

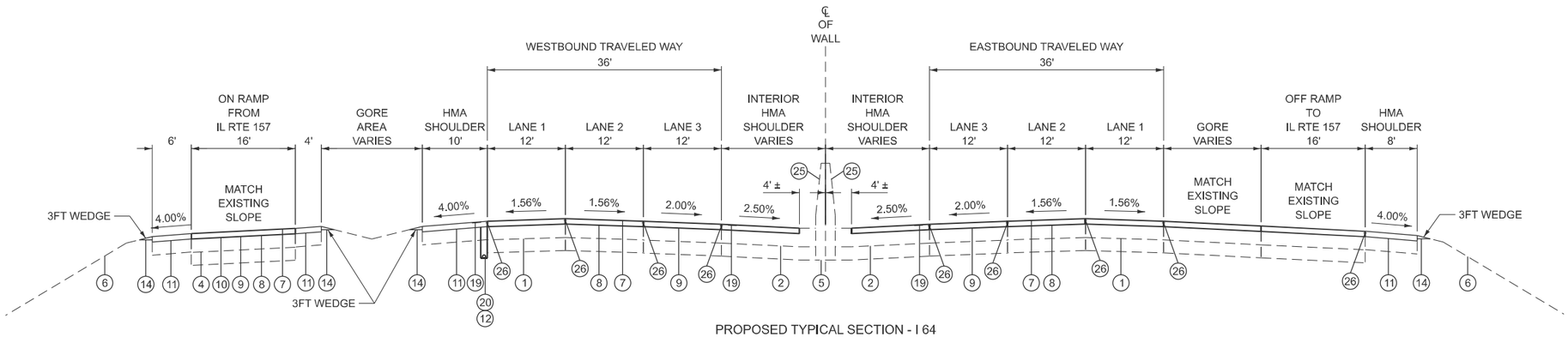

PROPOSED TYPICAL SECTION - I 64
STA: 336+00 TO 337+85

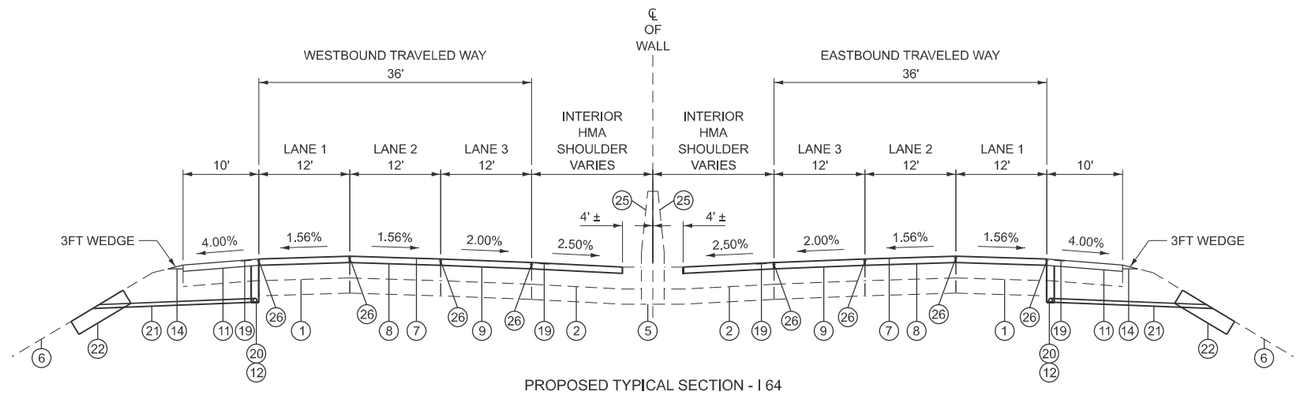

PROPOSED TYPICAL SECTION - I 64
STA: 337+85 TO 344+50

LEGEND

1. EXISTING PAVEMENT COMPOSITION:
   - 1/2" & VARIES -- MICRO-SURFACING TYPE II
   - 2" -- POLY BIT CONC SURFACE COURSE, STONE MATRIX ASPHALT, CLASS 1
   - 2 1/4" & VARIES -- POLY BIT CONC BINDER COURSE, SUPERPAVE, IL-19.0, N105
   - 8" TO 9" -- CONTINUOUSLY REINFORCED PCC PAVEMENT
   - 4" -- STABILIZED SUB-BASE
   - 12" -- AGGREGATE SUBGRADE
2. EXISTING INTERIOR SHOULDER COMPOSITION:
   - 2" -- BIT CONC SURFACE COURSE, SUPERPAVE, MIX "C", N50
   - 2 1/4" & VARIES -- POLY BIT CONC BINDER COURSE, SUPERPAVE, IL-19.0, N105
   - 8" TO 9" -- PORTLAND CEMENT CONCRETE SHOULDERS
   - 4" -- SUB-BASE GRANULAR MATERIAL, TYPE A
3. EXISTING EXTERIOR SHOULDER COMPOSITION:
   - 2" -- BIT CONC SURFACE, SUPERPAVE, MIX "C", N50
   - 13" -- BITUMINOUS SHOULDER
4. EXISTING ON & OFF RAMP HOT-MIX ASPHALT PAVEMENT (VARIABLE DEPTH)
5. EXISTING CONCRETE MEDIAN BARRIER
6. EXISTING GROUND LINE
7. POLYMERIZED HOT-MIX ASPHALT SURFACE COURSE, STONE MATRIX ASPHALT, 12.5, MIX "E" N80 (2")
8. POLYMERIZED HOT-MIX ASPHALT BINDER COURSE, STONE MATRIX ASPHALT, 12.5, MIX "E" N80 (3")
9. POLYMERIZED BITUMINOUS MATERIALS (TACK COAT)
10. HOT-MIX ASPHALT SURFACE REMOVAL, 5"
11. HOT-MIX ASPHALT SHOULDERS, 5"
12. SHOULDER REMOVAL AND REPLACEMENT
13. AGGREGATE SHOULDERS, TYPE B, 6"
14. AGGREGATE WEDGE SHOULDERS, TYPE B
15. AGGREGATE BASE COURSE, TYPE B (4")
16. COMBINATION CONCRETE CURB & GUTTER TYPE B6-24,
17. CONCRETE MEDIAN SURFACE, 4 INCH
18. POUROUS GRANULAR BACKFILL
19. SHOULDER RUMBLE STRIPS, 16 INCH
20. PIPE UNDERDRAINS, TYPE 1, 6"
21. PIPE UNDERDRAINS, 6" (SPECIAL)
22. CONCRETE HEADWALL (SPECIAL)
23. STEEL PLATE BEAM GUARDRAIL, TYPE A, 6 FOOT POSTS
24. TRAFFIC BARRIER TERMINAL, TYPE 1 (SPECIAL) TANGENT
25. BARRIER WALL REFLECTORS, TYPE C
26. LONGITUDINAL JOINT SEALANT

MODEL: Typical Section-I [Sheet]
FILE NAME: S:\PROJECTS\2021\1061D21_IDOT\D8\DESIGN\CAD_SHEETS\WO 5\D876R99-sht-typical.dgn

WILLETT HOFMANN & ASSOCIATES INC
ENGINEERING AND SURVEYING CONSULTANTS
859 / 0A / 2N - 2 HILL, LINDEN, IL 61321-3287
P: 815-284-3361 OFFICE FIRM: 184-000918

USER NAME = greg	DESIGNED - GBG	REVISED -
	DRAWN - GBG	REVISED -
PLOT SCALE = $SCALE$	CHECKED - GFS	REVISED -
PLOT DATE = 11/15/2024	DATE - 7-13-2024	REVISED -

STATE OF ILLINOIS
DEPARTMENT OF TRANSPORTATION

TYPICAL SECTIONS
INTERSTATE 64

SCALE: 1"=10' | SHEET 1 OF 7 SHEETS | STA. | TO STA.

F.A.I RTE.	SECTION	COUNTY	TOTAL SHEETS	SHEET NO.
64	82-(4,5,6,7)-1RS-2	ST. CLAIR	388	17
		CONTRACT NO. 76R99		
	ILLINOIS FED. AID PROJECT			

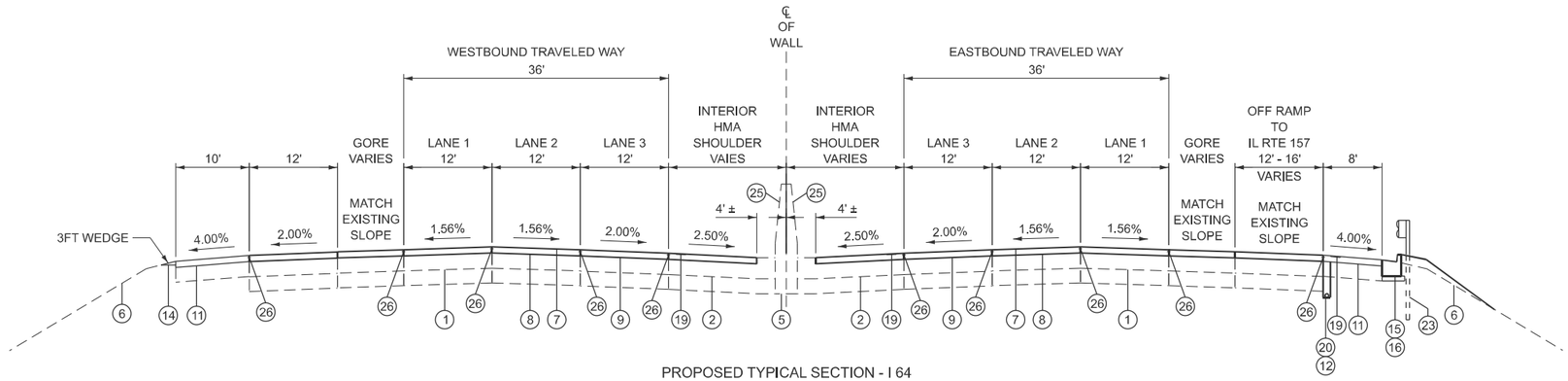

PROPOSED TYPICAL SECTION - I 64
STA: 344+50 TO 349+45
BRIDGE OMISSION: 349+45 TO 351+23

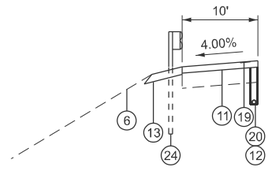

PROPOSED TYPICAL SECTION - TERMINAL TYPE 1 (SPECIAL) TANGENT
STA: 354+38 TO 354+88 (LT)

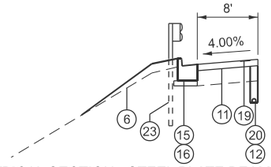

PROPOSED TYPICAL SECTION - STEEL PLATE BEAM GUARDRAIL, TYPE A
STA: 351+13 TO 354+38 (LT)

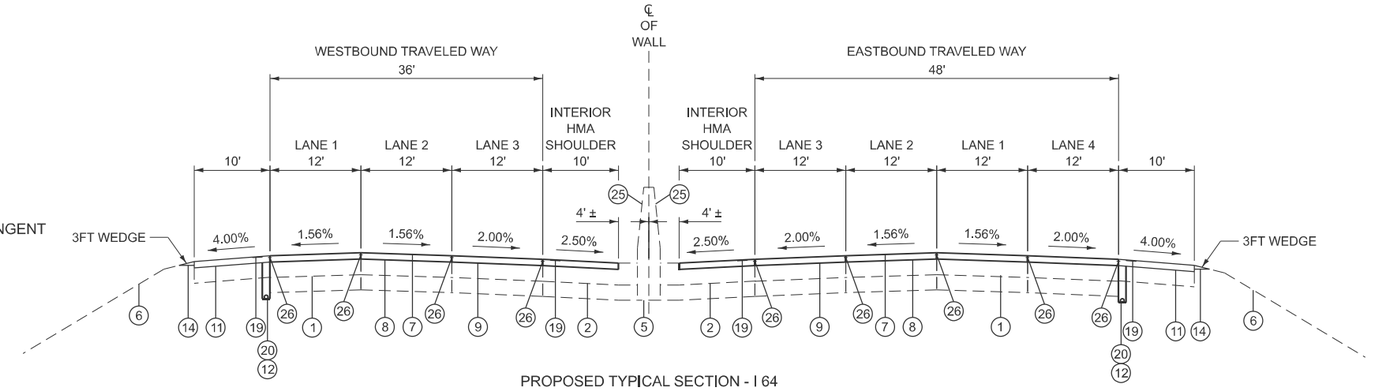

PROPOSED TYPICAL SECTION - I 64
STA: 351+23 TO 400+00
BRIDGE OMISSION: 349+46 TO 351+23

LEGEND

1. EXISTING PAVEMENT COMPOSITION:
   - 1/2" & VARIES -- MICRO-SURFACING TYPE II
   - 2" -- POLY BIT CONC SURFACE COURSE, STONE MATRIX ASPHALT, CLASS 1
   - 2 1/4" & VARIES -- POLY BIT CONC BINDER COURSE, SUPERPAVE, IL-19.0, N105
   - 8" TO 9" -- CONTINUOUSLY REINFORCED PCC PAVEMENT
   - 4" -- STABILIZED SUB-BASE
   - 12" -- AGGREGATE SUBGRADE
2. EXISTING INTERIOR SHOULDER COMPOSITION:
   - 2" -- BIT CONC SURFACE COURSE, SUPERPAVE, MIX "C", N50
   - 2 1/4" & VARIES -- POLY BIT CONC BINDER COURSE, SUPERPAVE, IL-19.0, N105
   - 8" TO 9" -- PORTLAND CEMENT CONCRETE SHOULDERS
   - 4" -- SUB-BASE GRANULAR MATERIAL, TYPE A
3. EXISTING EXTERIOR SHOULDER COMPOSITION:
   - 2" -- BIT CONC SURFACE, SUPERPAVE, MIX "C", N50
   - 13" -- BITUMINOUS SHOULDER
4. EXISTING ON & OFF RAMP HOT-MIX ASPHALT PAVEMENT (VARIABLE DEPTH)
5. EXISTING CONCRETE MEDIAN BARRIER
6. EXISTING GROUND LINE
7. POLYMERIZED HOT-MIX ASPHALT SURFACE COURSE, STONE MATRIX ASPHALT, 12.5, MIX "E" N80 (2")
8. POLYMERIZED HOT-MIX ASPHALT BINDER COURSE, STONE MATRIX ASPHALT, 12.5, MIX "E" N80 (3")
9. POLYMERIZED BITUMINOUS MATERIALS (TACK COAT)
10. HOT-MIX ASPHALT SURFACE REMOVAL, 5"
11. HOT-MIX ASPHALT SHOULDERS, 5"
12. SHOULDER REMOVAL AND REPLACEMENT
13. AGGREGATE SHOULDERS, TYPE B, 6"
14. AGGREGATE WEDGE SHOULDERS, TYPE B
15. AGGREGATE BASE COURSE, TYPE B (4")
16. COMBINATION CONCRETE CURB & GUTTER TYPE B6-24,
17. CONCRETE MEDIAN SURFACE, 4 INCH
18. POUROUS GRANULAR BACKFILL
19. SHOULDER RUMBLE STRIPS, 16 INCH
20. PIPE UNDERDRAINS, TYPE 1, 6"
21. PIPE UNDERDRAINS, 6" (SPECIAL)
22. CONCRETE HEADWALL (SPECIAL)
23. STEEL PLATE BEAM GUARDRAIL, TYPE A, 6 FOOT POSTS
24. TRAFFIC BARRIER TERMINAL, TYPE 1 (SPECIAL) TANGENT
25. BARRIER WALL REFLECTORS, TYPE C
26. LONGITUDINAL JOINT SEALANT

WILLETT HOFMANN & ASSOCIATES INC
ENGINEERING AND LAND SURVEYING
859 JAN DR. O'FALLON, IL 62221-0367
PH: 618.624.5481 FAX: 618.624.8818

USER NAME = greg	DESIGNED - GBG	REVISED -
	DRAWN - GBG	REVISED -
PLOT SCALE = $SCALE$	CHECKED - GFS	REVISED -
PLOT DATE = 11/15/2024	DATE - 7-13-2024	REVISED -

STATE OF ILLINOIS
DEPARTMENT OF TRANSPORTATION

TYPICAL SECTIONS
INTERSTATE 64

SCALE: 1"=10' | SHEET 2 OF 7 SHEETS | STA. | TO STA.

F.A.I RTE.	SECTION	COUNTY	TOTAL SHEETS	SHEET NO.
64	82-(4,5,6,7)-1RS-2	ST. CLAIR	388	18
		CONTRACT NO. 76R99		
	ILLINOIS	FED. AID PROJECT		

MODEL: Typical Section-2 [Sheet]
FILE NAME: S:\PROJECTS\2021\1061D21_IDOT\D8\DESIGN\CAD_SHEETS\WO 9\D876R99-sht-typicail.dgn

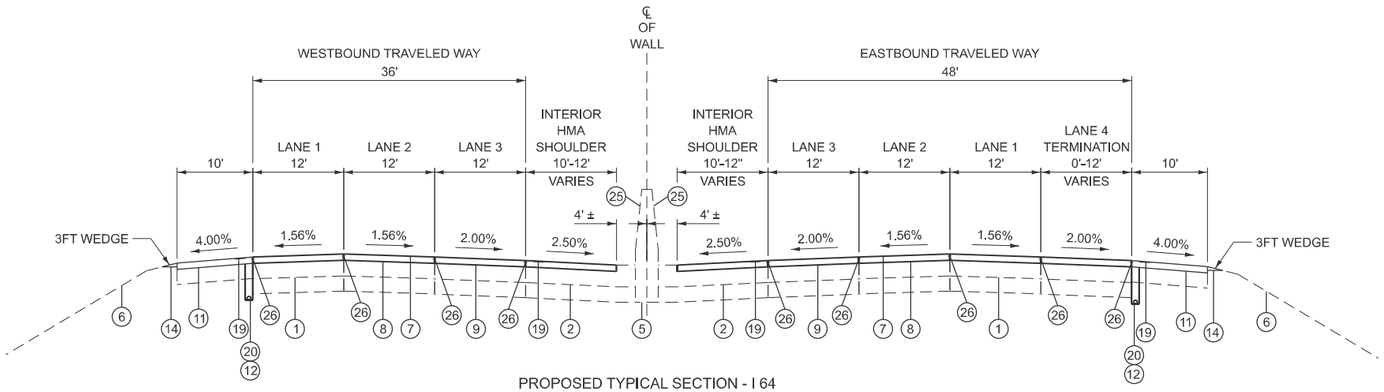

PROPOSED TYPICAL SECTION - I 64
STA: 400+00 TO 408+72
STA: 466+57 TO 506+93

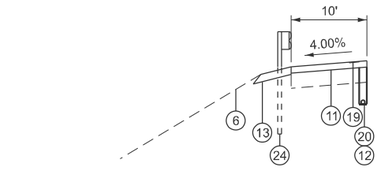

PROPOSED TYPICAL SECTION - TERMINAL TYPE 1 (SPECIAL) TANGENT
STA: 426+15 TO 426+65 (LT)

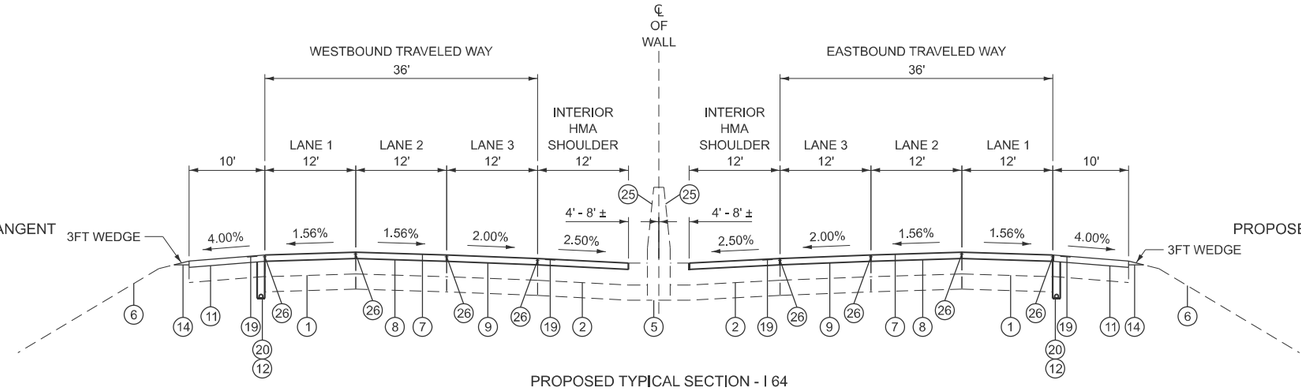

PROPOSED TYPICAL SECTION - I 64
STA: 408+72 TO 435+44
STA: 506+93 TO 509+77

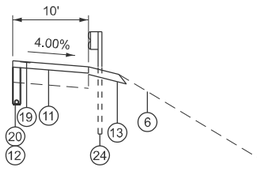

PROPOSED TYPICAL SECTION - TERMINAL TYPE 1 (SPECIAL) TANGENT
STA: 409+79 TO 410+29 (RT)

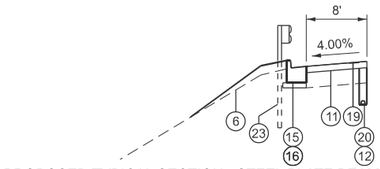

PROPOSED TYPICAL SECTION - STEEL PLATE BEAM GUARDRAIL, TYPE A
STA: 410+90 TO 426+15 (LT)

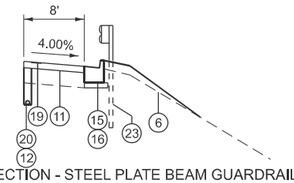

PROPOSED TYPICAL SECTION - STEEL PLATE BEAM GUARDRAIL, TYPE A
STA: 410+29 TO 422+38 (RT)

LEGEND

1. EXISTING PAVEMENT COMPOSITION:
   - 1/2" & VARIES -- MICRO-SURFACING TYPE II
   - 2" -- POLY BIT CONC SURFACE COURSE, STONE MATRIX ASPHALT, CLASS 1
   - 2 1/4" & VARIES -- POLY BIT CONC BINDER COURSE, SUPERPAVE, IL-19.0, N105
   - 8" TO 9" -- CONTINUOUSLY REINFORCED PCC PAVEMENT
   - 4" -- STABILIZED SUB-BASE
   - 12" -- AGGREGATE SUBGRADE
2. EXISTING INTERIOR SHOULDER COMPOSITION:
   - 2" -- BIT CONC SURFACE COURSE, SUPERPAVE, MIX "C", N50
   - 2 1/4" & VARIES -- POLY BIT CONC BINDER COURSE, SUPERPAVE, IL-19.0, N105
   - 8" TO 9" -- PORTLAND CEMENT CONCRETE SHOULDERS
   - 4" -- SUB-BASE GRANULAR MATERIAL, TYPE A
3. EXISTING EXTERIOR SHOULDER COMPOSITION:
   - 2" -- BIT CONC SURFACE, SUPERPAVE, MIX "C", N50
   - 13" -- BITUMINOUS SHOULDER
4. EXISTING ON & OFF RAMP HOT-MIX ASPHALT PAVEMENT (VARIABLE DEPTH)
5. EXISTING CONCRETE MEDIAN BARRIER
6. EXISTING GROUND LINE
7. POLYMERIZED HOT-MIX ASPHALT SURFACE COURSE, STONE MATRIX ASPHALT, 12.5, MIX "E" N80 (2")
8. POLYMERIZED HOT-MIX ASPHALT BINDER COURSE, STONE MATRIX ASPHALT, 12.5, MIX "E" N80 (3")
9. POLYMERIZED BITUMINOUS MATERIALS (TACK COAT)
10. HOT-MIX ASPHALT SURFACE REMOVAL, 5"
11. HOT-MIX ASPHALT SHOULDERS, 5"
12. SHOULDER REMOVAL AND REPLACEMENT
13. AGGREGATE SHOULDERS, TYPE B, 6"
14. AGGREGATE WEDGE SHOULDERS, TYPE B
15. AGGREGATE BASE COURSE, TYPE B (4")
16. COMBINATION CONCRETE CURB & GUTTER TYPE B6-24,
17. CONCRETE MEDIAN SURFACE, 4 INCH
18. POUROUS GRANULAR BACKFILL
19. SHOULDER RUMBLE STRIPS, 16 INCH
20. PIPE UNDERDRAINS, TYPE 1, 6"
21. PIPE UNDERDRAINS, 6" (SPECIAL)
22. CONCRETE HEADWALL (SPECIAL)
23. STEEL PLATE BEAM GUARDRAIL, TYPE A, 6 FOOT POSTS
24. TRAFFIC BARRIER TERMINAL, TYPE 1 (SPECIAL) TANGENT
25. BARRIER WALL REFLECTORS, TYPE C
26. LONGITUDINAL JOINT SEALANT

MODEL: Typical Section-3 [Sheet]
FILE NAME: S:\PROJECTS\2021\1061D21_IDOT\D8\DESIGN\CAD_SHEETS\WO 9\D876R99-sht-typical.dgn

WILLETT HOFMANN & ASSOCIATES INC
ENGINEERING ARCHITECTURE LANDSCAPE
859 JAN DR. O'FALLON, IL 62221-5067
P: 618.624.5481 FAX: 618.624.5559

USER NAME = greg	DESIGNED - GBG	REVISED -
	DRAWN - GBG	REVISED -
PLOT SCALE = $SCALE$	CHECKED - GFS	REVISED -
PLOT DATE = 11/15/2024	DATE - 7-13-2024	REVISED -

STATE OF ILLINOIS
DEPARTMENT OF TRANSPORTATION

TYPICAL SECTIONS
INTERSTATE 64

SCALE: 1"=10' | SHEET 3 OF 7 SHEETS | STA. | TO STA.

F.A.I RTE.	SECTION	COUNTY	TOTAL SHEETS	SHEET NO.
64	82-(4,5,6,7)-1RS-2	ST. CLAIR	388	19
		CONTRACT NO. 76R99		
	ILLINOIS	FED. AID PROJECT		

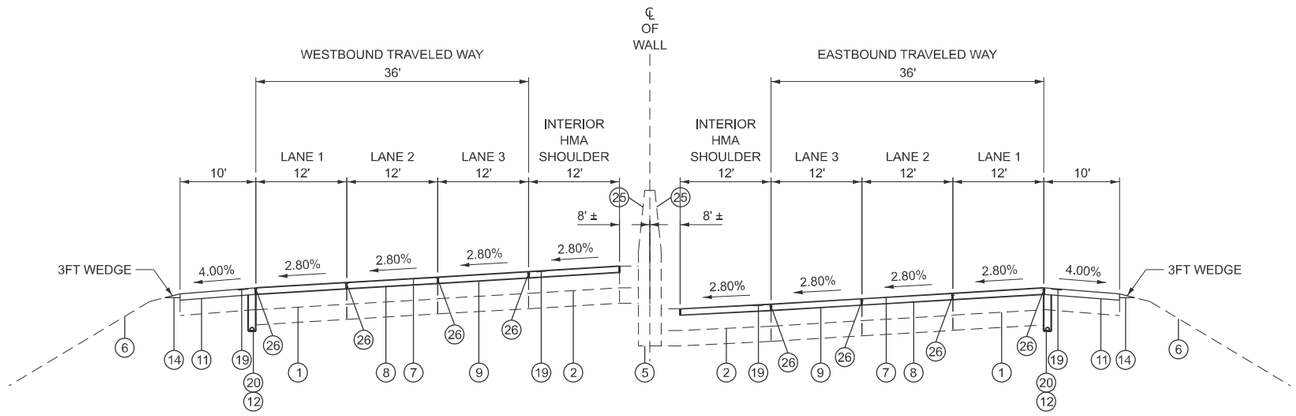

PROPOSED TYPICAL SECTION - I 64
STA: 435+44 TO 466+57
STA: 547+70 TO 560+38

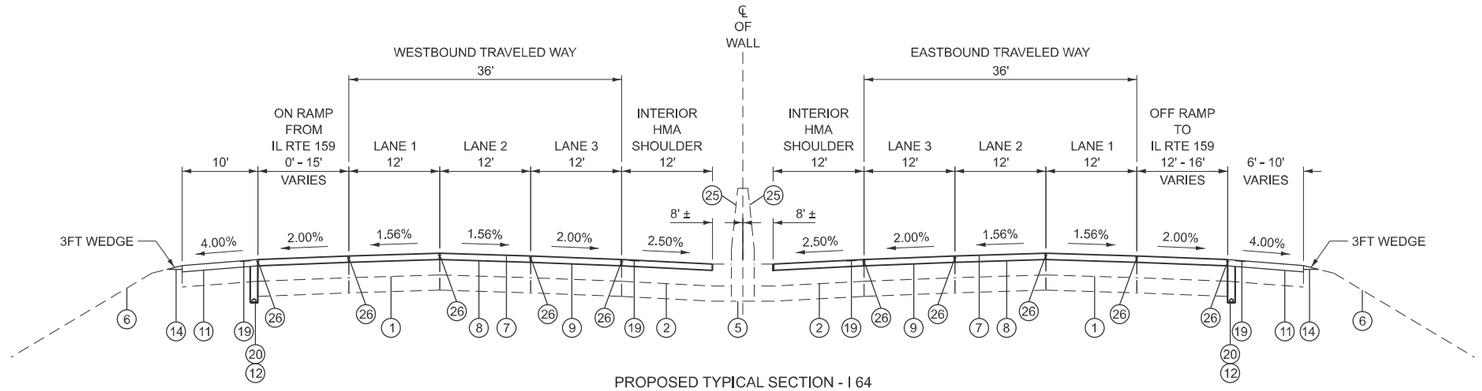

PROPOSED TYPICAL SECTION - I 64
STA: 509+77 TO 522+17

LEGEND

1. EXISTING PAVEMENT COMPOSITION:
   - 1/2" & VARIES -- MICRO-SURFACING TYPE II
   - 2" -- POLY BIT CONC SURFACE COURSE, STONE MATRIX ASPHALT, CLASS 1
   - 2 1/4" & VARIES -- POLY BIT CONC BINDER COURSE, SUPERPAVE, IL-19.0, N105
   - 8" TO 9" -- CONTINUOUSLY REINFORCED PCC PAVEMENT
   - 4" -- STABILIZED SUB-BASE
   - 12" -- AGGREGATE SUBGRADE
2. EXISTING INTERIOR SHOULDER COMPOSITION:
   - 2" -- BIT CONC SURFACE COURSE, SUPERPAVE, MIX "C", N50
   - 2 1/4" & VARIES -- POLY BIT CONC BINDER COURSE, SUPERPAVE, IL-19.0, N105
   - 8" TO 9" -- PORTLAND CEMENT CONCRETE SHOULDERS
   - 4" -- SUB-BASE GRANULAR MATERIAL, TYPE A
3. EXISTING EXTERIOR SHOULDER COMPOSITION:
   - 2" -- BIT CONC SURFACE, SUPERPAVE, MIX "C", N50
   - 13" -- BITUMINOUS SHOULDER
4. EXISTING ON & OFF RAMP HOT-MIX ASPHALT PAVEMENT (VARIABLE DEPTH)
5. EXISTING CONCRETE MEDIAN BARRIER
6. EXISTING GROUND LINE
7. POLYMERIZED HOT-MIX ASPHALT SURFACE COURSE, STONE MATRIX ASPHALT, 12.5, MIX "E" N80 (2")
8. POLYMERIZED HOT-MIX ASPHALT BINDER COURSE, STONE MATRIX ASPHALT, 12.5, MIX "E" N80 (3")
9. POLYMERIZED BITUMINOUS MATERIALS (TACK COAT)
10. HOT-MIX ASPHALT SURFACE REMOVAL, 5"
11. HOT-MIX ASPHALT SHOULDERS, 5"
12. SHOULDER REMOVAL AND REPLACEMENT
13. AGGREGATE SHOULDERS, TYPE B, 6"
14. AGGREGATE WEDGE SHOULDERS, TYPE B
15. AGGREGATE BASE COURSE, TYPE B (4")
16. COMBINATION CONCRETE CURB & GUTTER TYPE B6-24,
17. CONCRETE MEDIAN SURFACE, 4 INCH
18. POUROUS GRANULAR BACKFILL
19. SHOULDER RUMBLE STRIPS, 16 INCH
20. PIPE UNDERDRAINS, TYPE 1, 6"
21. PIPE UNDERDRAINS, 6" (SPECIAL)
22. CONCRETE HEADWALL (SPECIAL)
23. STEEL PLATE BEAM GUARDRAIL, TYPE A, 6 FOOT POSTS
24. TRAFFIC BARRIER TERMINAL, TYPE 1 (SPECIAL) TANGENT
25. BARRIER WALL REFLECTORS, TYPE C
26. LONGITUDINAL JOINT SEALANT

MODEL: Typical Section-I [Sheet]
FILE NAME: S:\PROJECTS\2021\1061D21_IDOT\D8\DESIGN\CAD_SHEETS\WO 5\D876R99-sht-typical.dgn

WILLETT HOFMANN & ASSOCIATES INC
ENGINEERING AND SURVEYING CONSULTANTS
859 / 624-2120 FAX 859 / 624-2121
1 S. 244 SUMMIT DRIVE, BELLEVILLE, IL 62221

USER NAME = greg	DESIGNED - GBG	REVISED -	
	DRAWN - GBG	REVISED -	
PLOT SCALE = $SCALE$	CHECKED - GFS	REVISED -	
PLOT DATE = 11/15/2024	DATE - 7-13-2024	REVISED -	

STATE OF ILLINOIS
DEPARTMENT OF TRANSPORTATION

TYPICAL SECTIONS
INTERSTATE 64

SCALE: 1"=10' | SHEET 4 OF 7 SHEETS | STA. | TO STA.

F.A.I RTE.	SECTION	COUNTY	TOTAL SHEETS	SHEET NO.
64	82-(4,5,6,7)-1RS-2	ST. CLAIR	388	20
		CONTRACT NO. 76R99		
	ILLINOIS	FED. AID PROJECT		

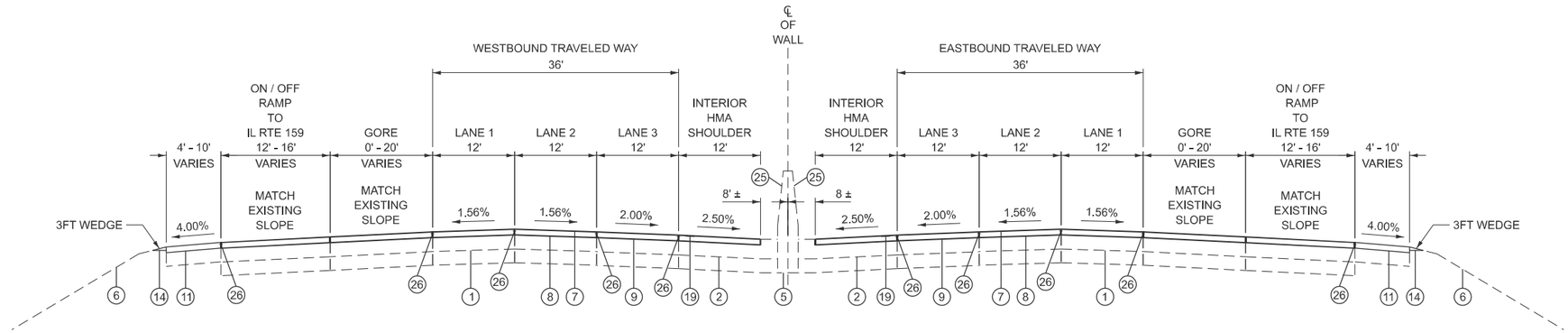

PROPOSED TYPICAL SECTION - I 64
STA: 522+17 TO 547+70

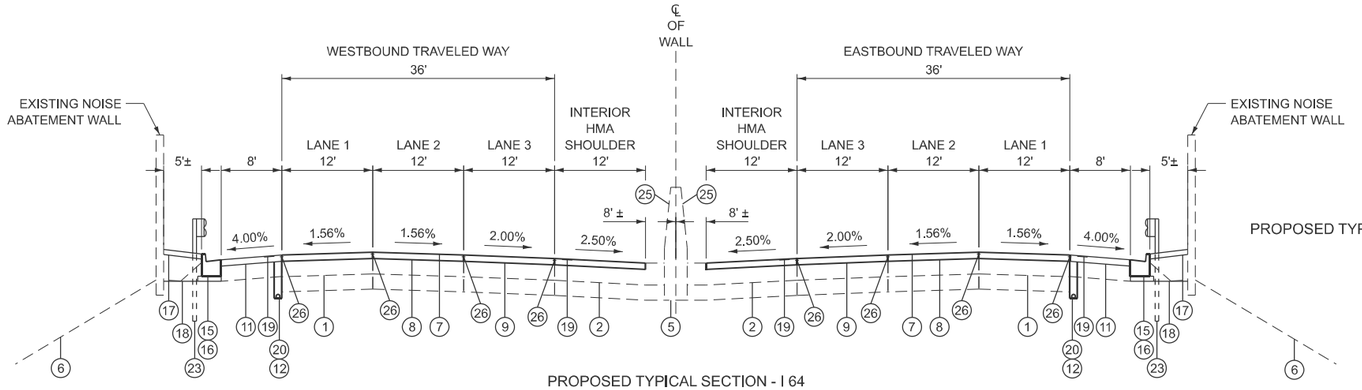

PROPOSED TYPICAL SECTION - I 64
STA: 560+38 TO 585+32

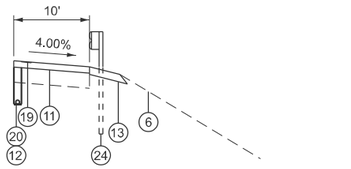

PROPOSED TYPICAL SECTION - TERMINAL TYPE 1 (SPECIAL) TANGENT
STA: 561+37 TO 561+87 (RT)

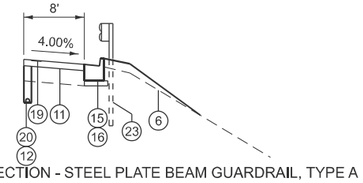

PROPOSED TYPICAL SECTION - STEEL PLATE BEAM GUARDRAIL, TYPE A
STA: 561+87 TO 562+97 (RT)

LEGEND

1. EXISTING PAVEMENT COMPOSITION:
   - 1/2" & VARIES -- MICRO-SURFACING TYPE II
   - 2" -- POLY BIT CONC SURFACE COURSE, STONE MATRIX ASPHALT, CLASS 1
   - 2 1/4" & VARIES -- POLY BIT CONC BINDER COURSE, SUPERPAVE, IL-19.0, N105
   - 8" TO 9" -- CONTINUOUSLY REINFORCED PCC PAVEMENT
   - 4" -- STABILIZED SUB-BASE
   - 12" -- AGGREGATE SUBGRADE
2. EXISTING INTERIOR SHOULDER COMPOSITION:
   - 2" -- BIT CONC SURFACE COURSE, SUPERPAVE, MIX "C", N50
   - 2 1/4" & VARIES -- POLY BIT CONC BINDER COURSE, SUPERPAVE, IL-19.0, N105
   - 8" TO 9" -- PORTLAND CEMENT CONCRETE SHOULDERS
   - 4" -- SUB-BASE GRANULAR MATERIAL, TYPE A
3. EXISTING EXTERIOR SHOULDER COMPOSITION:
   - 2" -- BIT CONC SURFACE, SUPERPAVE, MIX "C", N50
   - 13" -- BITUMINOUS SHOULDER
4. EXISTING ON & OFF RAMP HOT-MIX ASPHALT PAVEMENT (VARIABLE DEPTH)
5. EXISTING CONCRETE MEDIAN BARRIER
6. EXISTING GROUND LINE
7. POLYMERIZED HOT-MIX ASPHALT SURFACE COURSE, STONE MATRIX ASPHALT, 12.5, MIX "E" N80 (2")
8. POLYMERIZED HOT-MIX ASPHALT BINDER COURSE, STONE MATRIX ASPHALT, 12.5, MIX "E" N80 (3")
9. POLYMERIZED BITUMINOUS MATERIALS (TACK COAT)
10. HOT-MIX ASPHALT SURFACE REMOVAL, 5"
11. HOT-MIX ASPHALT SHOULDERS, 5"
12. SHOULDER REMOVAL AND REPLACEMENT
13. AGGREGATE SHOULDERS, TYPE B, 6"
14. AGGREGATE WEDGE SHOULDERS, TYPE B
15. AGGREGATE BASE COURSE, TYPE B (4")
16. COMBINATION CONCRETE CURB & GUTTER TYPE B6-24,
17. CONCRETE MEDIAN SURFACE, 4 INCH
18. POUROUS GRANULAR BACKFILL
19. SHOULDER RUMBLE STRIPS, 16 INCH
20. PIPE UNDERDRAINS, TYPE 1, 6"
21. PIPE UNDERDRAINS, 6" (SPECIAL)
22. CONCRETE HEADWALL (SPECIAL)
23. STEEL PLATE BEAM GUARDRAIL, TYPE A, 6 FOOT POSTS
24. TRAFFIC BARRIER TERMINAL, TYPE 1 (SPECIAL) TANGENT
25. BARRIER WALL REFLECTORS, TYPE C
26. LONGITUDINAL JOINT SEALANT

WILLETT HOFMANN & ASSOCIATES, INC.
ENGINEERING ARCHITECTURE SURVEYING
859 ASH DR. ROUTE 31 HILL, UNION, IL 61021-9387
TEL 815-923-2391 FAX 815-923-2392

USER NAME = greg	DESIGNED - GBG	REVISED -
	DRAWN - GBG	REVISED -
PLOT SCALE = $SCALE$	CHECKED - GFS	REVISED -
PLOT DATE = 11/15/2024	DATE - 7-13-2024	REVISED -

STATE OF ILLINOIS
DEPARTMENT OF TRANSPORTATION

TYPICAL SECTIONS
INTERSTATE 64

SCALE: 1"=10' | SHEET 5 OF 7 SHEETS | STA. | TO STA.

F.A.I RTE.	SECTION	COUNTY	TOTAL SHEETS	SHEET NO.
64	82-(4,5,6,7)-1RS-2	ST. CLAIR	388	21
		CONTRACT NO. 76R99		
		ILLINOIS	FED. AID PROJECT	

MODEL: Typical Section-5 [Sheet]
FILE NAME: S:\PROJECTS\2021\1061D21_IDOT\D8\DESIGN\CAD_SHEETS\WO 5\D876R99-sht-typical.dgn

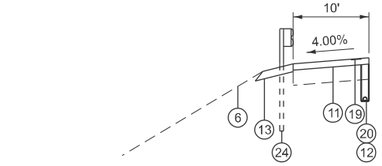

PROPOSED TYPICAL SECTION - TERMINAL TYPE 1 (SPECIAL) TANGENT
STA: 605+45 TO 605+95 (LT)

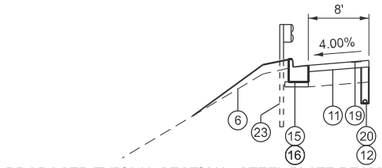

PROPOSED TYPICAL SECTION - STEEL PLATE BEAM GUARDRAIL, TYPE A
STA: 591+45 TO 605+45 (LT)

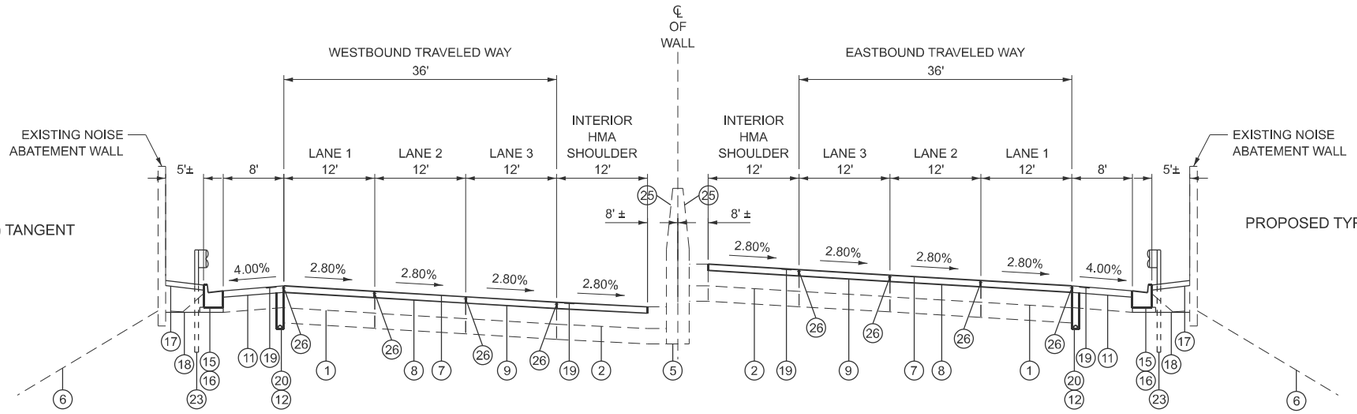

PROPOSED TYPICAL SECTION - I 64
STA: 585+32 TO 607+84
BRIDGE OMISSION STA: 589+97 TO 562+97

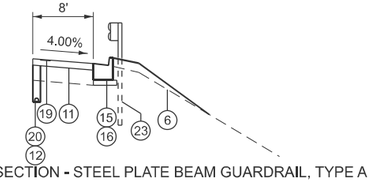

PROPOSED TYPICAL SECTION - STEEL PLATE BEAM GUARDRAIL, TYPE A
STA: 603+18 TO 605+75 (RT)

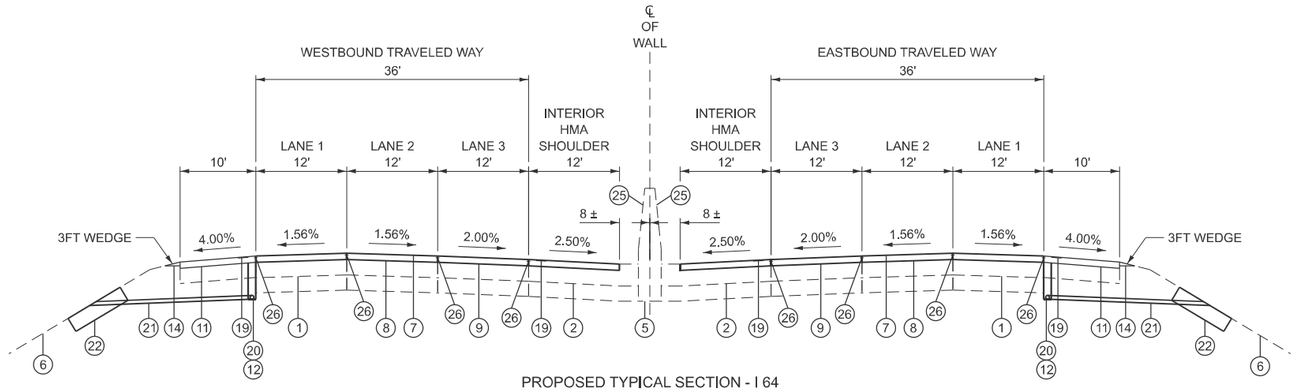

PROPOSED TYPICAL SECTION - I 64
STA: 607+84 TO 613+55
STA: 693+93 TO 726+72

LEGEND

1. EXISTING PAVEMENT COMPOSITION:
   - 1/2" & VARIES -- MICRO-SURFACING TYPE II
   - 2" -- POLY BIT CONC SURFACE COURSE, STONE MATRIX ASPHALT, CLASS 1
   - 2 1/4" & VARIES -- POLY BIT CONC BINDER COURSE, SUPERPAVE, IL-19.0, N105
   - 8" TO 9" -- CONTINUOUSLY REINFORCED PCC PAVEMENT
   - 4" -- STABILIZED SUB-BASE
   - 12" -- AGGREGATE SUBGRADE
2. EXISTING INTERIOR SHOULDER COMPOSITION:
   - 2" -- BIT CONC SURFACE COURSE, SUPERPAVE, MIX "C", N50
   - 2 1/4" & VARIES -- POLY BIT CONC BINDER COURSE, SUPERPAVE, IL-19.0, N105
   - 8" TO 9" -- PORTLAND CEMENT CONCRETE SHOULDERS
   - 4" -- SUB-BASE GRANULAR MATERIAL, TYPE A
3. EXISTING EXTERIOR SHOULDER COMPOSITION:
   - 2" -- BIT CONC SURFACE, SUPERPAVE, MIX "C", N50
   - 13" -- BITUMINOUS SHOULDER
4. EXISTING ON & OFF RAMP HOT-MIX ASPHALT PAVEMENT (VARIABLE DEPTH)
5. EXISTING CONCRETE MEDIAN BARRIER
6. EXISTING GROUND LINE
7. POLYMERIZED HOT-MIX ASPHALT SURFACE COURSE, STONE MATRIX ASPHALT, 12.5, MIX "E" N80 (2")
8. POLYMERIZED HOT-MIX ASPHALT BINDER COURSE, STONE MATRIX ASPHALT, 12.5, MIX "E" N80 (3")
9. POLYMERIZED BITUMINOUS MATERIALS (TACK COAT)
10. HOT-MIX ASPHALT SURFACE REMOVAL, 5"
11. HOT-MIX ASPHALT SHOULDERS, 5"
12. SHOULDER REMOVAL AND REPLACEMENT
13. AGGREGATE SHOULDERS, TYPE B, 6"
14. AGGREGATE WEDGE SHOULDERS, TYPE B
15. AGGREGATE BASE COURSE, TYPE B (4")
16. COMBINATION CONCRETE CURB & GUTTER TYPE B6-24,
17. CONCRETE MEDIAN SURFACE, 4 INCH
18. POUROUS GRANULAR BACKFILL
19. SHOULDER RUMBLE STRIPS, 16 INCH
20. PIPE UNDERDRAINS, TYPE 1, 6"
21. PIPE UNDERDRAINS, 6" (SPECIAL)
22. CONCRETE HEADWALL (SPECIAL)
23. STEEL PLATE BEAM GUARDRAIL, TYPE A, 6 FOOT POSTS
24. TRAFFIC BARRIER TERMINAL, TYPE 1 (SPECIAL) TANGENT
25. BARRIER WALL REFLECTORS, TYPE C
26. LONGITUDINAL JOINT SEALANT

MODEL: Typical Section-6 [Sheet]
FILE NAME: S:\PROJECTS\2021\1061D21_IDOT\D8\DESIGN\CAD_SHEETS\WO 5\D876R99-sht-typical.dgn

WILLETT HOFMANN & ASSOCIATES INC
ENGINEERING AND LAND SURVEYING CONSULTANTS
859 / 624-2120 FAX
"E" S-284-3361 DPR0047884 184-0059-8

USER NAME = greg	DESIGNED - GBG	REVISED -
	DRAWN - GBG	REVISED -
PLOT SCALE = $SCALE$	CHECKED - GFS	REVISED -
PLOT DATE = 11/15/2024	DATE - 7-13-2024	REVISED -

STATE OF ILLINOIS
DEPARTMENT OF TRANSPORTATION

TYPICAL SECTIONS
INTERSTATE 64

SCALE: 1"=10' | SHEET 6 OF 7 SHEETS | STA. | TO STA.

F.A.I RTE.	SECTION	COUNTY	TOTAL SHEETS	SHEET NO.
64	82-(4,5,6,7)-1RS-2	ST. CLAIR	388	22
		CONTRACT NO. 76R99		
	ILLINOIS FED. AID PROJECT			

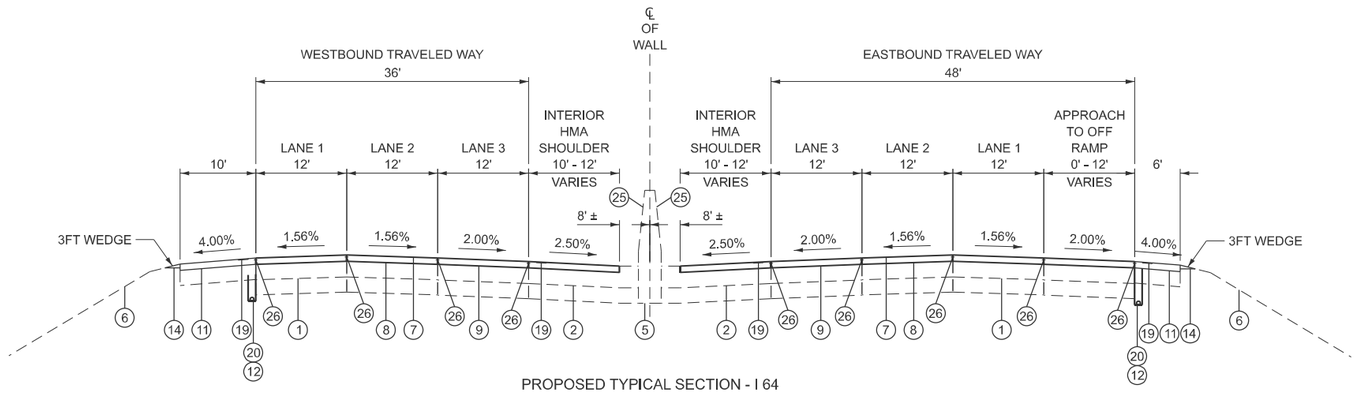

PROPOSED TYPICAL SECTION - I 64
STA: 613+55 TO 658+55

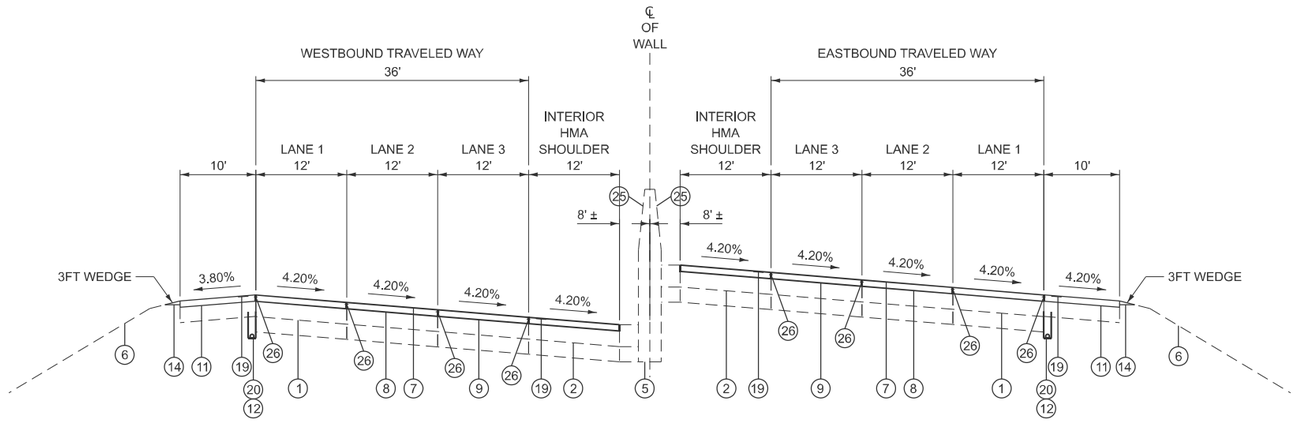

PROPOSED TYPICAL SECTION - I 64
STA: 658+55 TO 693+93

LEGEND

1. EXISTING PAVEMENT COMPOSITION:
   - 1/2" & VARIES -- MICRO-SURFACING TYPE II
   - 2" -- POLY BIT CONC SURFACE COURSE, STONE MATRIX ASPHALT, CLASS 1
   - 2 1/4" & VARIES -- POLY BIT CONC BINDER COURSE, SUPERPAVE, IL-19.0, N105
   - 8" TO 9" -- CONTINUOUSLY REINFORCED PCC PAVEMENT
   - 4" -- STABILIZED SUB-BASE
   - 12" -- AGGREGATE SUBGRADE
2. EXISTING INTERIOR SHOULDER COMPOSITION:
   - 2" -- BIT CONC SURFACE COURSE, SUPERPAVE, MIX "C", N50
   - 2 1/4" & VARIES -- POLY BIT CONC BINDER COURSE, SUPERPAVE, IL-19.0, N105
   - 8" TO 9" -- PORTLAND CEMENT CONCRETE SHOULDERS
   - 4" -- SUB-BASE GRANULAR MATERIAL, TYPE A
3. EXISTING EXTERIOR SHOULDER COMPOSITION:
   - 2" -- BIT CONC SURFACE, SUPERPAVE, MIX "C", N50
   - 13" -- BITUMINOUS SHOULDER
4. EXISTING ON & OFF RAMP HOT-MIX ASPHALT PAVEMENT (VARIABLE DEPTH)
5. EXISTING CONCRETE MEDIAN BARRIER
6. EXISTING GROUND LINE
7. POLYMERIZED HOT-MIX ASPHALT SURFACE COURSE, STONE MATRIX ASPHALT, 12.5, MIX "E" N80 (2")
8. POLYMERIZED HOT-MIX ASPHALT BINDER COURSE, STONE MATRIX ASPHALT, 12.5, MIX "E" N80 (3")
9. POLYMERIZED BITUMINOUS MATERIALS (TACK COAT)
10. HOT-MIX ASPHALT SURFACE REMOVAL, 5"
11. HOT-MIX ASPHALT SHOULDERS, 5"
12. SHOULDER REMOVAL AND REPLACEMENT
13. AGGREGATE SHOULDERS, TYPE B, 6"
14. AGGREGATE WEDGE SHOULDERS, TYPE B
15. AGGREGATE BASE COURSE, TYPE B (4")
16. COMBINATION CONCRETE CURB & GUTTER TYPE B6-24,
17. CONCRETE MEDIAN SURFACE, 4 INCH
18. POUROUS GRANULAR BACKFILL
19. SHOULDER RUMBLE STRIPS, 16 INCH
20. PIPE UNDERDRAINS, TYPE 1, 6"
21. PIPE UNDERDRAINS, 6" (SPECIAL)
22. CONCRETE HEADWALL (SPECIAL)
23. STEEL PLATE BEAM GUARDRAIL, TYPE A, 6 FOOT POSTS
24. TRAFFIC BARRIER TERMINAL, TYPE 1 (SPECIAL) TANGENT
25. BARRIER WALL REFLECTORS, TYPE C
26. LONGITUDINAL JOINT SEALANT

MODEL: Typical Section-7 [Sheet]
FILE NAME: S:\PROJECTS\2021\1061D21_IDOT\D8\DESIGN\CAD_SHEETS\WO 5\D876R99-sht-typical.dgn

WILLETT HOFMANN & ASSOCIATES INC

USER NAME = greg	DESIGNED - GBG	REVISED -	
	DRAWN - GBG	REVISED -	
PLOT SCALE = $SCALE$	CHECKED - GFS	REVISED -	
PLOT DATE = 11/15/2024	DATE - 7-13-2024	REVISED -	

STATE OF ILLINOIS
DEPARTMENT OF TRANSPORTATION

TYPICAL SECTIONS
INTERSTATE 64

SCALE: 1"=10' | SHEET 7 OF 7 SHEETS | STA. | TO STA.

F.A.I RTE.	SECTION	COUNTY	TOTAL SHEETS	SHEET NO.
64	82-(4,5,6,7)-1RS-2	ST. CLAIR	388	23
		CONTRACT NO. 76R99		
	ILLINOIS FED. AID PROJECT			

PAVING SCHEDULE

LOCATION			AGGREGATE BASE COURSE, TYPE B 4"	POLYMERIZED BITUMINOUS MATERIALS (TACK COAT)	LONGITUDINAL JOINT SEALANT	POLYMERIZED HOT-MIX ASPHALT BINDER COURSE, STONE MATRIX ASPHALT 12.5, N80	POLYMERIZED HOT-MIX ASPHALT SURFACE COURSE, STONE MATRIX ASPHALT, 12.5, MIX "E", N80	HOT-MIX ASPHALT SURFACE REMOVAL, 5"	PAVED SHOULDER REMOVAL	AGGREGATE SHOULDERS, TYPE B 6"	AGGREGATE WEDGE SHOULDER, TYPE B	HOT-MIX ASPHALT SHOULDERS	SHOULDER RUMBLE STRIPS, 16 INCH	MATERIAL TRANSFER DEVICE
ROADWAY	STATION	REMARKS	SQ YD	POUND	FOOT	TON	TON	SQ YD	SQ YD	SQ YD	TON	TON	FOOT	TON
INTERSTATE 64	STA 336+00.00 TO 726+72.00	WESTBOUND	2,045	159,912.24	153,820	25,914	17,276	236,907.03	1,419	184	2,141	23,427	69,235	66,617
INTERSTATE 64	STA 336+00.00 TO 726+72.00	EASTBOUND	2,172	163,861.70	158,290	27,199	18,133	242,758.07	2,234	184	2,052	22,923	70,123	68,255
IL 157	STA 1+71.98 TO 335+97.09	RAMP A		3,414.32		461	308	5,058.26			132	478		1,247
IL 157	STA 0+00.00 TO 17+31.03	RAMP B		2,687.45		473	315	3,981.40			149	337		1,125
IL 157	STA 1+58.02 TO 15+19.43	RAMP C		2,352.99		360	240	3,485.92			127	387		987
IL 157	STA 336+00.00 TO 18+41.51	RAMP D		3,828.14		723	482	5,671.33			197	396		1,601
IL 159	STA 0+95.94 TO 22+70.64	RAMP A		2,308.64		356	238	3,420.20			156	375		969
IL 159	STA 2+76.52 TO 19+65.24	RAMP B		4,563.07		822	548	6,760.10			215	537		1,907
IL 159	STA 1+76.26 TO 23+90.97	RAMP C		2,341.84		415	277	3,469.40			150	291		983
IL 159	STA 2+60.57 TO 22+70.32	RAMP D		1,790.68		286	191	2,652.87			129	274		751
IL 159	STA 2+00.00 TO 22+58.57	RAMP E		2,202.69		336	224	3,263.23			146	363		923
IL 159	STA 0+00.00 TO 18+38.11	RAMP F		3,637.77		600	400	5,389.29			182	523		1,523
HIGHWAY 50	STA 4+25.00 TO 705+91.00	RAMP A		2,439.07		393	262	3,613.44			174	368		1,023
HIGHWAY 50	STA 704+06.93 TO 5+49.31	RAMP B		1,776.97		287	192	2,632.55			85	267		746
HIGHWAY 50	STA 3+97.28 TO 673+36.69	RAMP C		2,162.72		343	229	3,204.04			149	336		908
HIGHWAY 50	STA 656+81.40 TO 13+44.03	RAMP D		3,211.49		544	363	4,757.77			204	437		4,084
SUBTOTALS			4,217	362,491.78	312,110	59,512	39,678	537,024.90	3,653	368	6,388	51,719	139,358	153,649
TOTALS			4,217	362,492	312,110	59,512	39,678	537,025	3,653	368	6,388	51,719	139,358	153,649

NOTE: SEE ROADWAY PLANS FOR BRIDGE LOCATION OMISSIONS AND STATION EQUATIONS.

MEDIAN PAVING SCHEDULE

LOCATION					POROUS GRANULAR BACKFILL	CONCRETE MEDIAN SURFACE, 4 INCH
ROADWAY	STA	STA	LT / RT	REMARKS	CU YD	SQ FT
INTERSTATE 64	565+82.50	565+94.50	LT	WESTBOUND	4.89	66.00
INTERSTATE 64	565+94.50	589+95.00	LT	WESTBOUND	800.17	10,802.25
INTERSTATE 64	562+97.48	590+00.00	RT	EASTBOUND	1000.93	13,512.60
INTERSTATE 64	591+50.00	602+94.06	RT	EASTBOUND	508.47	6,864.36
INTERSTATE 64	602+94.06	603+18.46	RT	EASTBOUND	13.56	183.00
TOTALS					2,328.02	31,428.21
USE					2,329	31,429

NOTE: SEE ROADWAY AND BRIDGE PLANS FOR BRIDGE OMISSIONS AND STATION EQUATIONS.

CURB AND GUTTER SCHEDULE

LOCATION			CURB REMOVAL	COMBINATION CONCRETE CURB AND GUTTER, TYPE B-6.24
ROADWAY	STATION / OFFSET	REMARKS	FOOT	FOOT
INTERSTATE 64	LT STA 336+00 TO 726+72	WESTBOUND	5,817	7,185
INTERSTATE 64	RT STA 336+00 TO 726+72	EASTBOUND	7,237	7,713
TOTALS			13,054	14,898

NOTE: SEE ROADWAY AND BRIDGE PLANS FOR BRIDGE OMISSIONS AND STATION EQUATIONS.

MODEL: Schedule 1 [Sheet]
FILE NAME: S:\2021\21IL007 - PTB 198-30 D8 - Willett Hofmann - Various Ph I-IIWO 4 I-64 Resurfacing\CADD\CADD Sheets\D876R99-sht-sched_roadway.dgn

SCHEDULE OF QUANTITIES

SEEDING & RESTORATION											
			GRADING AND SHAPING (SPECIAL)	SEEDING, CLASS 2A	NITROGEN FERTILIZER NUTRIENT	PHOSPHORUS FERTILIZER NUTRIENT	POTASSIUM FERTILIZER NUTRIENT	EROSION CONTROL BLANKET	TEMPORARY EROSION CONTROL SEEDING	PERIMETER EROSION BARRIER	INLET AND PIPE PROTECTION
ROADWAY	STATION / OFFSET	REMARKS	SQ YD	ACRE	POUND	POUND	POUND	SQ YD	POUND	FOOT	EACH
INTERSTATE 64	LT STA: 336+00 to 351+00		171	0.04	3	3	3	171	4		
INTERSTATE 64	RT STA: 336+00 to 345+00		114	0.02	2	2	2	114	2		
INTERSTATE 64	RT STA: 345+20 to 349+05		414	0.09	8	8	8	414	9	369	
INTERSTATE 64	LT STA: 351+40 to 355+50		671	0.13	12	12	12	671	13	421	
INTERSTATE 64	RT STA: 351+50 to 395+00		656	0.14	13	13	13	656	14		
INTERSTATE 64	RT STA: 395+10 to 397+50		866	0.18	17	17	17	866	19	264	
INTERSTATE 64	LT STA: 356+00 to 410+00		798	0.17	15	15	15	798	17		
INTERSTATE 64	RT STA: 399+00 to 408+00		171	0.04	3	3	3	171	4		
INTERSTATE 64	RT STA: 409+00 to 423+00		6,117	1.26	114	114	114	6,117	126	1,450	
INTERSTATE 64	LT STA: 410+00 to 427+50		7,176	1.48	134	134	134	7,176	148	1,763	
INTERSTATE 64	RT STA: 423+50 to 471+00		741	0.16	14	14	14	741	16		
INTERSTATE 64	LT STA: 428+00 to 471+00		684	0.14	13	13	13	684	14		
INTERSTATE 64	RT STA: 471+50 to 499+00		10,574	2.18	197	197	197	10,574	219	3,573	
INTERSTATE 64	LT STA: 473+50 to 501+00		8,218	1.70	153	153	153	8,218	170	2,205	
INTERSTATE 64	RT STA: 503+00 to 548+00		684	0.14	13	13	13	684	14		
INTERSTATE 64	LT STA 504+05		57	0.01	1	1	1	57	1		
INTERSTATE 64	LT STA: 505+00 to 511+00		1,061	0.22	20	20	20	1,061	22	506	
INTERSTATE 64	LT STA: 514+00 to 528+00		416	0.09	8	8	8	416	9	118	
INTERSTATE 64	LT STA: 529+00 to 532+00		447	0.09	8	8	8	447	9	181	
INTERSTATE 64	LT STA: 534+00 to 554+00		228	0.05	4	4	4	228	5		
INTERSTATE 64	RT STA: 548+50 to 563+50		8,173	1.69	152	152	152	8,173	169	1,556	
INTERSTATE 64	LT STA: 554+50 to 558+00		1,078	0.22	20	20	20	1,078	22	293	
INTERSTATE 64	LT STA: 561+00 to 590+00		456	0.10	9	9	9	456	10		
INTERSTATE 64	RT STA: 565+00 to 602+00		570	0.12	11	11	11	570	12		
INTERSTATE 64	LT STA: 591+00 to 607+00		6,632	1.37	123	123	123	6,632	137	1,616	
INTERSTATE 64	RT STA: 603+00 to 655+50		8,231	1.70	153	153	153	8,231	170	2,664	
INTERSTATE 64	LT STA: 608+00 to 726+50		1,482	0.30	28	28	28	1,425	30		
INTERSTATE 64	RT STA: 657+00 to 726+50		1,140	0.22	20	20	20	1,026	21		
INTERSTATE 64	EASTBOUND LANE	CL MEDIAN INLETS									176
INTERSTATE 64	WESTBOUND LANE	CL MEDIAN INLETS									176
HWY 50 RAMP	RT STA: 10+65 to 11+20		278	0.06	5	5	5	278	6	150	
HWY 50 RAMP	RT STA 12+65 to 13+25		278	0.06	5	5	5	278	6	150	
		PROJECT TOTAL	68,582	14	1,278	1,278	1,278	68,411	1,417	17,284	351

GUARDRAIL / BARRIER WALL										
			STEEL PLATE BEAM GUARDRAIL, TYPE A, 6 FOOT POSTS	TRAFFIC BARRIER TERMINAL, TYPE 2	TRAFFIC BARRIER TERMINAL, TYPE 6	TRAFFIC BARRIER TERMINAL, TYPE 1 (SPECIAL) TANGENT	TERMINAL MARKER - DIRECT APPLIED	GUARDRAIL REFLECTORS, TYPE B	GUARDRAIL REMOVAL	BARRIER WALL REFLECTORS, TYPE C
ROADWAY	STATION / OFFSET	REMARKS	FOOT	EACH	EACH	EACH	EACH	EACH	FOOT	EACH
INTERSTATE 64	RT STA 345+83 to 349+55	PER STANDARDS 782006 & 635001	275		1	1	1	5	352	
INTERSTATE 64	LT STA 351+12 to 354+88	PER STANDARDS 782006 & 635001	288		1	1	1	5	344	
INTERSTATE 64	RT STA 409+79 to 422+29	PER STANDARDS 782006 & 635001	1,188	1		1	1	8	1,259	
INTERSTATE 64	LT STA 410+90 to 426+65	PER STANDARDS 782006 & 635001	1,513	1		1	1	8	1,493	
INTERSTATE 64	RT STA 472+21 to 477+84	PER STANDARDS 782006 & 635001	500	1		1	1	6	473	
INTERSTATE 64	LT STA 474+11 to 479+25	PER STANDARDS 782006 & 635001	450	1		1	1	6	490	
INTERSTATE 64	RT STA 480+90 to 490+81	PER STANDARDS 782006 & 635001	938	1		1	1	7	852	
INTERSTATE 64	LT STA 485+73 to 491+48	PER STANDARDS 782006 & 635001	513	1		1	1	6	427	
INTERSTATE 64	RT STA 492+75 to 498+15	PER STANDARDS 782006 & 635001	488	1		1	1	6	446	
INTERSTATE 64	LT STA 494+73 to 500+35	PER STANDARDS 782006 & 635001	500	1		1	1	6	505	
INTERSTATE 64	RT STA 561+38 to 590+00	PER STANDARDS 782006 & 635001	2,775		1	1	1	12	2,819	
INTERSTATE 64	RT STA 591+50 to 605+67	PER STANDARDS 782006 & 635001	1,363	1	1			15	1,416	
INTERSTATE 64	LT STA 565+87 to 589+95	PER STANDARDS 782006 & 635001	2,363	1	1			11	2,416	
INTERSTATE 65	LT STA 591+49 to 605+97	PER STANDARDS 782006 & 635001	1,375		1	1	1	13	564	
INTERSTATE 66	RT STA 335+65 to 726+72	PER STANDARDS 782006 & 635001								106
INTERSTATE 67	LT STA 335+65 to 726+72	PER STANDARDS 782006 & 635001								106
		PROJECT TOTAL	14,525	10	6	12	12	114	13,856	212

MODEL: Schedules [Sheet]
FILE NAME: S:\PROJECTS\2021\1061D21_IDOT\D8\DESIGN\CAD_SHEETS\WO 5\D876R99-sht-schedule.dgn

WILLETT HOFMANN & ASSOCIATES INC
ENGINEERING AND LAND SURVEYING
800 JOLIET ROAD, SUITE 100, JOLIET, IL 60435-6987
PHONE: 815-744-3300 FAX: 815-744-3301

USER NAME = greg	DESIGNED - GBG	REVISED -
	DRAWN - KRH	REVISED -
PLOT SCALE = $SCALE$	CHECKED - GFS	REVISED -
PLOT DATE = 11/19/2024	DATE - 7/12/24	REVISED -

STATE OF ILLINOIS
DEPARTMENT OF TRANSPORTATION

SCHEDULE OF QUANTITIES
SEEDING & RESTORATION / GUARDRAIL

SCALE: 1"=5' | SHEET 1 OF 5 SHEETS | STA. | TO STA.

F.A.I RTE.	SECTION	COUNTY	TOTAL SHEETS	SHEET NO.
64	82-(4,5,6,7)-1RS-2	ST. CLAIR	388	25
		CONTRACT NO. 76R99		
	ILLINOIS FED. AID PROJECT			

SCHEDULE OF QUANTITIES

PIPE UNDERDRAINS									
			SHOULDER REMOVAL AND REPLACEMENT	PIPE UNDERDRAINS, TYPE 1, 6"	PIPE UNDERDRAINS 6" (SPECIAL)	CONCRETE HEADWALL (SPECIAL)	REMOVE CONCRETE HEADWALLS FOR PIPE DRAINS	PIPE UNDERDRAIN REMOVAL	UNDERDRAIN HEADWALL MARKER
ROADWAY	STATION / OFFSET	REMARKS	FOOT	FOOT	FOOT	EACH	EACH	FOOT	EACH
INTERSTATE 64	RT STA: 336+00 to 349+54	EASTBOUND EXTERIOR SHOULDER	1,354	1,354				1,354	
INTERSTATE 64	RT STA 339+10	EASTBOUND OUTLET	10		25	1	1	19	1
INTERSTATE 64	RT STA 343+50	EASTBOUND OUTLET	10		25	1	1	19	1
INTERSTATE 64	RT STA 347+54	EASTBOUND OUTLET	10		25	1			1
INTERSTATE 64	LT STA: 336+00 to 349+36	WESTBOUND EXTERIOR SHOULDER	1,335	1,335					
INTERSTATE 64	LT STA 337+50	WESTBOUND OUTLET	10		25	1	1	19	1
INTERSTATE 64	LT STA 341+50	WESTBOUND OUTLET	10		25	1	1	19	1
INTERSTATE 64	LT STA 345+22	WESTBOUND OUTLET	10		25	1			1
INTERSTATE 64	RT STA: 351+32 to 436+39	EASTBOUND EXTERIOR SHOULDER	8,510	8,510				8,510	
INTERSTATE 64	RT STA 351+85	EASTBOUND OUTLET	10		25	1	1	19	1
INTERSTATE 64	RT STA 355+50	EASTBOUND OUTLET	10		25	1	1	19	1
INTERSTATE 64	RT STA 359+50	EASTBOUND OUTLET	10		25	1	1	19	1
INTERSTATE 64	RT STA 363+50	EASTBOUND OUTLET	10		25	1	1	19	1
INTERSTATE 64	RT STA 367+50	EASTBOUND OUTLET	10		25	1	1	19	1
INTERSTATE 64	RT STA 371+50	EASTBOUND OUTLET	10		25	1	1	19	1
INTERSTATE 64	RT STA 375+50	EASTBOUND OUTLET	10		25	1	1	19	1
INTERSTATE 64	RT STA 379+50	EASTBOUND OUTLET	10		25	1	1	19	1
INTERSTATE 64	RT STA 383+50	EASTBOUND OUTLET	10		25	1	1	19	1
INTERSTATE 64	RT STA 387+50	EASTBOUND OUTLET	10		25	1	1	19	1
INTERSTATE 64	RT STA 391+50	EASTBOUND OUTLET	10		25	1	1	19	1
INTERSTATE 64	RT STA 395+50	EASTBOUND OUTLET	10		25	1	1	19	1
INTERSTATE 64	RT STA 399+50	EASTBOUND OUTLET	10		25	1	1	19	1
INTERSTATE 64	RT STA 403+50	EASTBOUND OUTLET	10		25	1	1	19	1
INTERSTATE 64	RT STA 407+50	EASTBOUND OUTLET	10		25	1	1	19	1
INTERSTATE 64	RT STA 411+50	EASTBOUND OUTLET	10		25	1	1	14	1
INTERSTATE 64	RT STA 415+50	EASTBOUND OUTLET	10		25	1	1	15	1
INTERSTATE 64	RT STA 419+50	EASTBOUND OUTLET	10		25	1	1	14	1
INTERSTATE 64	RT STA 423+50	EASTBOUND OUTLET	10		25	1	1	14	1
INTERSTATE 64	RT STA 427+50	EASTBOUND OUTLET	10		25	1	1	19	1
INTERSTATE 64	RT STA 431+50	EASTBOUND OUTLET	10		25	1	1	19	1
INTERSTATE 64	RT STA 435+50	EASTBOUND OUTLET	10		25	1	1	19	1
INTERSTATE 64	LT STA: 350+90 to 437+20	WESTBOUND EXTERIOR SHOULDER	8,628	8,628				8,628	
INTERSTATE 64	LT STA 351+70	WESTBOUND OUTLET	10		25	1	1	19	1
INTERSTATE 64	LT STA 356+00	WESTBOUND OUTLET	10		25	1	1	19	1
INTERSTATE 64	LT STA 360+00	WESTBOUND OUTLET	10		25	1	1	19	1
INTERSTATE 64	LT STA 364+00	WESTBOUND OUTLET	10		25	1	1	19	1
INTERSTATE 64	LT STA 368+00	WESTBOUND OUTLET	10		25	1	1	19	1
INTERSTATE 64	LT STA 372+00	WESTBOUND OUTLET	10		25	1	1	19	1
INTERSTATE 64	LT STA 376+00	WESTBOUND OUTLET	10		25	1	1	19	1
INTERSTATE 64	LT STA 379+75	WESTBOUND OUTLET	10		25	1	1	19	1
INTERSTATE 64	LT STA 384+00	WESTBOUND OUTLET	10		25	1	1	19	1
INTERSTATE 64	LT STA 388+00	WESTBOUND OUTLET	10		25	1	1	19	1
INTERSTATE 64	LT STA 392+00	WESTBOUND OUTLET	10		25	1	1	19	1
INTERSTATE 64	LT STA 396+00	WESTBOUND OUTLET	10		25	1	1	19	1
INTERSTATE 64	LT STA 400+00	WESTBOUND OUTLET	10		25	1	1	19	1
INTERSTATE 64	LT STA 404+00	WESTBOUND OUTLET	10		25	1	1	19	1
INTERSTATE 64	LT STA 408+00	WESTBOUND OUTLET	10		25	1	1	19	1
INTERSTATE 64	LT STA 412+00	WESTBOUND OUTLET	10		25	1	1	19	1
INTERSTATE 64	LT STA 416+00	WESTBOUND OUTLET	10		25	1	1	15	1
INTERSTATE 64	LT STA 420+00	WESTBOUND OUTLET	10		25	1	1	18	1
INTERSTATE 64	LT STA 424+00	WESTBOUND OUTLET	10		25	1	1	18	1
INTERSTATE 64	LT STA 428+00	WESTBOUND OUTLET	10		25	1	1	18	1
INTERSTATE 64	LT STA 432+00	WESTBOUND OUTLET	10		25	1	1	19	1
INTERSTATE 64	LT STA 436+00	WESTBOUND OUTLET	10		25	1	1	19	1
INTERSTATE 64	RT STA: 436+39 to 455+50	EASTBOUND EXTERIOR SHOULDER	1,929	1,929				1,929	
INTERSTATE 64	RT STA 439+50	EASTBOUND OUTLET	10		25	1	1	10	1
INTERSTATE 64	RT STA 443+50	EASTBOUND OUTLET	10		25	1	1	19	1
INTERSTATE 64	RT STA 447+50	EASTBOUND OUTLET	10		25	1	1	19	1
INTERSTATE 64	RT STA 451+50	EASTBOUND OUTLET	10		25	1	1	19	1

CONTINUED (1 OF 4)

MODEL: Schedules-1 [Sheet]
FILE NAME: S:\PROJECTS\20211106\D21_IDOT\D8\DESIGN\CAD_SHEETS\WO 5\D876R99-sht-schedule.dgn

WILLETT HOFMANN & ASSOCIATES INC
ENGINEERING AND SURVEYING CONSULTANTS
809 SOUTH 251H HILL, UNION, IL 61091-0287
TEL: 815-923-3361 FAX: 815-923-3369

USER NAME = greg	DESIGNED - GBG	REVISED -	
	DRAWN - KRH	REVISED -	
PLOT SCALE = $SCALE$	CHECKED - GFS	REVISED -	
PLOT DATE = 11/15/2024	DATE - 7/12/24	REVISED -	

STATE OF ILLINOIS
DEPARTMENT OF TRANSPORTATION

SCHEDULE OF QUANTITIES
PIPE UNDERDRAINS

SCALE: 1"=5' | SHEET 2 OF 5 SHEETS | STA. | TO STA.

F.A.I RTE.	SECTION	COUNTY	TOTAL SHEETS	SHEET NO.
64	82-(4,5,6,7)-1RS-2	ST. CLAIR	388	26
		CONTRACT NO. 76R99		
		ILLINOIS	FED. AID PROJECT	

SCHEDULE OF QUANTITIES

PIPE UNDERDRAINS									
			SHOULDER REMOVAL AND REPLACEMENT	PIPE UNDERDRAINS, TYPE 1, 6"	PIPE UNDERDRAINS 6" (SPECIAL)	CONCRETE HEADWALL (SPECIAL)	REMOVE CONCRETE HEADWALLS FOR PIPE DRAINS	PIPE UNDERDRAIN REMOVAL	UNDERDRAIN HEADWALL MARKER
ROADWAY	STATION / OFFSET	REMARKS	FOOT	FOOT	FOOT	EACH	EACH	FOOT	EACH
		CONTINUED							
INTERSTATE 64	RT STA 455+50	EASTBOUND OUTLET (LP)	10		25	1	1	28	1
INTERSTATE 64	LT STA: 437+20 to 455+84	WESTBOUND EXTERIOR SHOULDER	1,846	1,846				1,846	
INTERSTATE 64	LT STA 440+00	WESTBOUND OUTLET	10		25	1	1	19	1
INTERSTATE 64	LT STA 444+00	WESTBOUND OUTLET	10		25	1	1	19	1
INTERSTATE 64	LT STA 448+00	WESTBOUND OUTLET	10		25	1	1	19	1
INTERSTATE 64	LT STA 451+90	WESTBOUND OUTLET	10		25	1	1	19	1
INTERSTATE 64	LT STA 455+50	WESTBOUND OUTLET					1	28	
INTERSTATE 64	LT STA 455+84	WESTBOUND OUTLET (LP)	10		25	1			1
INTERSTATE 64	RT STA: 455+50 to 477+57	EASTBOUND EXTERIOR SHOULDER	2,217	2,217				2,217	
INTERSTATE 64	RT STA 459+00	EASTBOUND OUTLET	10		25	1	1	19	1
INTERSTATE 64	RT STA 463+00	EASTBOUND OUTLET	10		25	1	1	19	1
INTERSTATE 64	RT STA 467+00	EASTBOUND OUTLET	10		25	1	1	19	1
INTERSTATE 64	RT STA 471+00	EASTBOUND OUTLET	10		25	1	1	19	1
INTERSTATE 64	RT STA 475+00	EASTBOUND OUTLET	10		25	1	1	19	1
INTERSTATE 64	LT STA: 455+84 to 477+90	WESTBOUND EXTERIOR SHOULDER	2,197	2,197				2,197	
INTERSTATE 64	LT STA 459+00	WESTBOUND OUTLET	10		25	1	1	19	1
INTERSTATE 64	LT STA 463+00	WESTBOUND OUTLET	10		25	1	1	19	1
INTERSTATE 64	LT STA 467+00	WESTBOUND OUTLET	10		25	1	1	19	1
INTERSTATE 64	LT STA 471+00	WESTBOUND OUTLET	10		25	1	1	19	1
INTERSTATE 64	LT STA 475+00	WESTBOUND OUTLET	10		25	1	1	19	1
INTERSTATE 64	RT STA: 477+57 to 507+00	EASTBOUND EXTERIOR SHOULDER	2,938	2,938				2,938	
INTERSTATE 64	RT STA 479+00	EASTBOUND OUTLET	10		25	1	1	19	1
INTERSTATE 64	RT STA 483+00	EASTBOUND OUTLET	10		25	1	1	19	1
INTERSTATE 64	RT STA 487+00	EASTBOUND OUTLET	10		25	1	1	15	1
INTERSTATE 64	RT STA 491+00	EASTBOUND OUTLET	10		25	1	1	19	1
INTERSTATE 64	RT STA 495+00	EASTBOUND OUTLET	10		25	1	1	15	1
INTERSTATE 64	RT STA 499+00	EASTBOUND OUTLET	10		25	1	1	19	1
INTERSTATE 64	RT STA 503+00	EASTBOUND OUTLET	10		25	1	1	19	1
INTERSTATE 64	RT STA 507+00	EASTBOUND OUTLET (LP)	10		25	1	1	28	1
INTERSTATE 64	LT STA: 477+90 to 508+00	WESTBOUND EXTERIOR SHOULDER	3,017	3,017				3,017	
INTERSTATE 64	LT STA 480+00	WESTBOUND OUTLET	10		25	1	1	17	1
INTERSTATE 64	LT STA 484+00	WESTBOUND OUTLET	10		25	1	1	17	1
INTERSTATE 64	LT STA 488+00	WESTBOUND OUTLET	10		25	1	1	15	1
INTERSTATE 64	LT STA 492+00	WESTBOUND OUTLET	10		25	1	1	19	1
INTERSTATE 64	LT STA 496+00	WESTBOUND OUTLET	10		25	1	1	17	1
INTERSTATE 64	LT STA 499+50	WESTBOUND OUTLET	10		25	1	1	19	1
INTERSTATE 64	LT STA 504+05	WESTBOUND OUTLET	10		25	1	1	28	1
INTERSTATE 64	LT STA 508+00	WESTBOUND OUTLET (LP)	10		25	1	1	28	1
INTERSTATE 64	RT STA: 507+00 to 523+10	EASTBOUND EXTERIOR SHOULDER	1,610	1,610				1,610	
INTERSTATE 64	RT STA 510+00	EASTBOUND OUTLET	10		25	1	1	30	1
INTERSTATE 64	RT STA 513+00	EASTBOUND OUTLET	10		25	1	1	30	1
INTERSTATE 64	RT STA 517+50	EASTBOUND OUTLET	10		25	1	1	25	1
INTERSTATE 64	RT STA 521+50	EASTBOUND OUTLET	10		25	1			1
INTERSTATE 64	LT STA: 508+00 to 524+45	WESTBOUND EXTERIOR SHOULDER	1,645	1,645				1,645	
INTERSTATE 64	LT STA 510+35	WESTBOUND OUTLET	10		25	1	1	19	1
INTERSTATE 64	LT STA 514+00	WESTBOUND OUTLET	10		25	1	1	19	1
INTERSTATE 64	LT STA 518+00	WESTBOUND OUTLET	10		25	1			1
INTERSTATE 64	LT STA 522+00	WESTBOUND OUTLET	10		25	1			1
INTERSTATE 64	RT STA: 523+10 to 530+78	EASTBOUND EXTERIOR SHOULDER	768	768				768	
INTERSTATE 64	RT STA 527+80	EASTBOUND OUTLET	10		25	1	1	19	1
INTERSTATE 64	RT STA 530+10	EASTBOUND OUTLET	10		25	1	1	19	1
INTERSTATE 64	LT STA: 524+45 to 530+78	WESTBOUND EXTERIOR SHOULDER	634	634				634	
INTERSTATE 64	LT STA 527+80	WESTBOUND OUTLET	10		25	1	1	19	1
INTERSTATE 64	RT STA: 530+78 to 535+69	EASTBOUND EXTERIOR SHOULDER	492	492				492	
INTERSTATE 64	RT STA 534+10	EASTBOUND OUTLET	10		25	1	1	10	1
INTERSTATE 64	RT STA 535+69 to 549+39	EASTBOUND EXTERIOR SHOULDER	1,370	1,370				1,370	
INTERSTATE 64	RT STA 538+10	EASTBOUND OUTLET	10		25	1	1	19	1
INTERSTATE 64	RT STA 542+10	EASTBOUND OUTLET	10		25	1	1	19	1
		CONTINUED (2 OF 4)							

SCHEDULE OF QUANTITIES

PIPE UNDERDRAINS									
			SHOULDER REMOVAL AND REPLACEMENT	PIPE UNDERDRAINS, TYPE 1, 6"	PIPE UNDERDRAINS 6" (SPECIAL)	CONCRETE HEADWALL (SPECIAL)	REMOVE CONCRETE HEADWALLS FOR PIPE DRAINS	PIPE UNDERDRAIN REMOVAL	UNDERDRAIN HEADWALL MARKER
ROADWAY	STATION / OFFSET	REMARKS	FOOT	FOOT	FOOT	EACH	EACH	FOOT	EACH
CONTINUED									
INTERSTATE 64	RT STA 546+10	EASTBOUND OUTLET	10		25	1	1	19	1
INTERSTATE 64	LT STA: 530+78 to 538+28	WESTBOUND EXTERIOR SHOULDER	751	751				751	
INTERSTATE 64	LT STA 534+75	WESTBOUND OUTLET	10		25	1			1
INTERSTATE 64	LT STA 538+28	WESTBOUND OUTLET	10		25	1			1
INTERSTATE 64	LT STA: 538+28 to 551+50	WESTBOUND EXTERIOR SHOULDER	1,321	1,321				1,321	
INTERSTATE 64	LT STA 542+75	WESTBOUND OUTLET	10		25	1	1	19	1
INTERSTATE 64	LT STA 546+75	WESTBOUND OUTLET	10		25	1	1	19	1
INTERSTATE 64	RT STA 549+39 to 565+00	EASTBOUND EXTERIOR SHOULDER	1,571	1,571				1,571	
INTERSTATE 64	RT STA 553+50	EASTBOUND OUTLET	10		25	1			1
INTERSTATE 64	RT STA 557+50	EASTBOUND OUTLET	10		25	1			1
INTERSTATE 64	RT STA 561+00	EASTBOUND OUTLET	10		25	1			1
INTERSTATE 64	RT STA 565+00	EASTBOUND OUTLET (LP)	10		25	1			1
INTERSTATE 64	LT STA 551+50 to 565+00	WESTBOUND EXTERIOR SHOULDER	1,343	1,343				1,343	
INTERSTATE 64	LT STA 557+00	WESTBOUND OUTLET	10		25	1	1	19	1
INTERSTATE 64	LT STA 561+00	WESTBOUND OUTLET	10		25	1	1	19	1
INTERSTATE 64	LT STA 565+00	WESTBOUND OUTLET (LP)	10		25	1	1	28	1
INTERSTATE 64	LT STA: 565+00 to 586+52	WESTBOUND EXTERIOR SHOULDER	2,152	2,152				2,152	
INTERSTATE 64	LT STA 568+75	WESTBOUND OUTLET	10		25	1	1	19	1
INTERSTATE 64	LT STA 572+75	WESTBOUND OUTLET	10		25	1	1	19	1
INTERSTATE 64	LT STA 576+75	WESTBOUND OUTLET	10		25	1	1	19	1
INTERSTATE 64	LT STA 580+75	WESTBOUND OUTLET	10		25	1	1	20	1
INTERSTATE 64	LT STA 585+00	WESTBOUND OUTLET	10		25	1	1	19	1
INTERSTATE 64	RT STA: 565+00 to 586+52	EASTBOUND EXTERIOR SHOULDER	2,152	2,152				2,152	
INTERSTATE 64	RT STA 569+00	EASTBOUND OUTLET	10		25	1	1	19	1
INTERSTATE 64	RT STA 573+50	EASTBOUND OUTLET	10		25	1	1	19	1
INTERSTATE 64	RT STA 577+50	EASTBOUND OUTLET	10		25	1	1	20	1
INTERSTATE 64	RT STA 581+50	EASTBOUND OUTLET	10		25	1	1	20	1
INTERSTATE 64	RT STA 585+50	EASTBOUND OUTLET	10		25	1	1	19	1
INTERSTATE 64	LT STA: 586+52 to 605+10	WESTBOUND EXTERIOR SHOULDER	1,723	1,723				1,723	
INTERSTATE 64	LT STA 589+55	WESTBOUND OUTLET	10		25	1	1	19	1
INTERSTATE 64	LT STA 594+00	WESTBOUND OUTLET	10		25	1	1	19	1
INTERSTATE 64	LT STA 598+00	WESTBOUND OUTLET	10		25	1	1	19	1
INTERSTATE 64	LT STA 602+00	WESTBOUND OUTLET	10		25	1	1	19	1
INTERSTATE 64	LT STA 605+10	WESTBOUND OUTLET (LP)	10		25	1	1	20	1
INTERSTATE 64	RT STA: 586+52 to 605+00	EASTBOUND EXTERIOR SHOULDER	1,679	1,679				1,679	
INTERSTATE 64	RT STA 589+50	EASTBOUND OUTLET	10		25	1	1	17	1
INTERSTATE 64	RT STA 593+00	EASTBOUND OUTLET	10		25	1	1	17	1
INTERSTATE 64	RT STA 597+00	EASTBOUND OUTLET	10		25	1	1	17	1
INTERSTATE 64	RT STA 601+00	EASTBOUND OUTLET	10		25	1	1	19	1
INTERSTATE 64	RT STA 605+00	EASTBOUND OUTLET (LP)	10		25	1	1	20	1
INTERSTATE 64	RT STA: 605+00 to 649+61	EASTBOUND EXTERIOR SHOULDER	1,897	1,897				1,897	
INTERSTATE 64	RT STA 609+00	EASTBOUND OUTLET	10		25	1	1	19	1
INTERSTATE 64	RT STA 613+00	EASTBOUND OUTLET	10		25	1	1	22	1
INTERSTATE 64	RT STA 617+00	EASTBOUND OUTLET	10		25	1	1	22	1
INTERSTATE 64	RT STA 646+50	EASTBOUND OUTLET	10		25	1	1	19	1
INTERSTATE 64	LT STA: 605+10 to 649+61	WESTBOUND EXTERIOR SHOULDER	1,892	1,892				1,892	
INTERSTATE 64	LT STA 609+00	WESTBOUND OUTLET	10		25	1	1	19	1
INTERSTATE 64	LT STA 613+00	WESTBOUND OUTLET	10		25	1	1	19	1
INTERSTATE 64	LT STA 617+00	WESTBOUND OUTLET	10		25	1	1	19	1
INTERSTATE 64	LT STA 646+50	WESTBOUND OUTLET	10		25	1	1	19	1
INTERSTATE 64	RT STA: 649+61 to 661+98	EASTBOUND EXTERIOR SHOULDER	1,237	1,237				1,237	
INTERSTATE 64	RT STA 653+50	EASTBOUND OUTLET	10		25	1	1	20	1
INTERSTATE 64	RT STA 657+24	EASTBOUND OUTLET	10		25	1	1	19	1
INTERSTATE 64	RT STA 661+98	EASTBOUND OUTLET	10		25	1			1
INTERSTATE 64	LT STA: 640+65 to 678+00	WESTBOUND EXTERIOR SHOULDER	2,861	2,861				2,861	
INTERSTATE 64	LT STA 650+50	WESTBOUND OUTLET	10		25	1	1	12	1
INTERSTATE 64	LT STA 654+00	WESTBOUND OUTLET	10		25	1	1	12	1
INTERSTATE 64	LT STA 658+00	WESTBOUND OUTLET	10		25	1	1	16	1
CONTINUED (3 OF 4)									

SCHEDULE OF QUANTITIES

PIPE UNDERDRAINS									
			SHOULDER REMOVAL AND REPLACEMENT	PIPE UNDERDRAINS, TYPE 1, 6"	PIPE UNDERDRAINS 6" (SPECIAL)	CONCRETE HEADWALL (SPECIAL)	REMOVE CONCRETE HEADWALLS FOR PIPE DRAINS	PIPE UNDERDRAIN REMOVAL	UNDERDRAIN HEADWALL MARKER
ROADWAY	STATION / OFFSET	REMARKS	FOOT	FOOT	FOOT	EACH	EACH	FOOT	EACH
CONTINUED									
INTERSTATE 64	LT STA 661+08	WESTBOUND OUTLET	10		25	1	1	16	1
INTERSTATE 64	LT STA 662+82	WESTBOUND OUTLET	10		25	1	1	19	1
INTERSTATE 64	LT STA 666+00	WESTBOUND OUTLET	10		25	1	1	15	1
INTERSTATE 64	LT STA 670+00	WESTBOUND OUTLET	10		25	1	1	17	1
INTERSTATE 64	LT STA 674+00	WESTBOUND OUTLET	10		25	1			1
INTERSTATE 64	LT STA 678+00	WESTBOUND OUTLET	10		25	1			1
INTERSTATE 64	RT STA: 661+98 to 683+00	EASTBOUND EXTERIOR SHOULDER	2,060	2,060				2,069	
INTERSTATE 64	RT STA 665+50	EASTBOUND OUTLET	10		25	1	1	19	1
INTERSTATE 64	RT STA 669+50	EASTBOUND OUTLET	10		25	1	1	19	1
INTERSTATE 64	RT STA 673+50	EASTBOUND OUTLET	10		25	1	1	19	1
INTERSTATE 64	RT STA 677+50	EASTBOUND OUTLET	10		25	1	1	19	1
INTERSTATE 64	RT STA 681+50	EASTBOUND OUTLET	10		25	1	1	24	1
INTERSTATE 64	RT STA 683+00	EASTBOUND OUTLET (LP)	10		25	1			1
INTERSTATE 64	LT STA: 678+00 to 683+50	WESTBOUND EXTERIOR SHOULDER	559	559				559	
INTERSTATE 64	LT STA 680+75	WESTBOUND OUTLET	10		25	1			1
INTERSTATE 64	LT STA 683+50	WESTBOUND OUTLET	10		25	1	1	28	1
INTERSTATE 64	LT STA: 683+50 to 687+94	WESTBOUND EXTERIOR SHOULDER	451	451				451	
INTERSTATE 64	LT STA 687+50	WESTBOUND OUTLET	10		25	1	1	19	1
INTERSTATE 64	RT STA: 683+00 to 687+94	EASTBOUND EXTERIOR SHOULDER	488	488				488	
INTERSTATE 64	RT STA 685+50	EASTBOUND OUTLET	10		25	1	1	19	1
INTERSTATE 64	LT STA: 687+94 to 689+50	WESTBOUND EXTERIOR SHOULDER	158	158				158	
INTERSTATE 64	LT STA 689+50	WESTBOUND OUTLET	10		25	1			1
INTERSTATE 64	RT STA: 687+94 to 689+50	EASTBOUND EXTERIOR SHOULDER	154	154				154	
INTERSTATE 64	RT STA 689+50	EASTBOUND OUTLET	10		25	1	1	19	1
INTERSTATE 64	RT STA: 689+50 to 693+50	EASTBOUND EXTERIOR SHOULDER	398	398				398	
INTERSTATE 64	RT STA 693+50	EASTBOUND OUTLET	10		25	1	1	19	1
INTERSTATE 64	LT STA: 689+50 to 697+75	WESTBOUND EXTERIOR SHOULDER	828	828				828	
INTERSTATE 64	LT STA 691+50	WESTBOUND OUTLET	10		25	1	1	19	1
INTERSTATE 64	LT STA 695+50	WESTBOUND OUTLET	10		25	1	1	19	1
INTERSTATE 64	RT STA: 693+50 to 709+80	EASTBOUND EXTERIOR SHOULDER	1,630	1,630				1,630	
INTERSTATE 64	RT STA 697+50	EASTBOUND OUTLET	10		25	1			1
INTERSTATE 64	RT STA 701+50	EASTBOUND OUTLET	10		25	1			1
INTERSTATE 64	RT STA 703+35	EASTBOUND OUTLET	10		25	1	1	19	1
INTERSTATE 64	RT STA 707+35	EASTBOUND OUTLET	10		25	1	1	19	1
INTERSTATE 64	LT STA: 697+75 to 709+73	WESTBOUND EXTERIOR SHOULDER	1,198	1,198				1,198	
INTERSTATE 64	LT STA 697+75	WESTBOUND OUTLET	10		25	1			1
INTERSTATE 64	LT STA 703+28	WESTBOUND OUTLET	10		25	1	1	19	1
INTERSTATE 64	LT STA 706+50	WESTBOUND OUTLET	10		25	1	1	19	1
INTERSTATE 64	LT STA: 709+73 to 719+00	WESTBOUND EXTERIOR SHOULDER	928	928				928	
INTERSTATE 64	LT STA 710+50	WESTBOUND OUTLET	10		25	1	1	14	1
INTERSTATE 64	LT STA 714+50	WESTBOUND OUTLET	10		25	1	1	14	1
INTERSTATE 64	LT STA 718+50	EX WESTBOUND OUTLET					1	19	
INTERSTATE 64	LT STA 719+00	WESTBOUND OUTLET (LP)	10		25	1			1
INTERSTATE 64	RT STA: 709+80 to 719+00	EASTBOUND EXTERIOR SHOULDER	921	921				921	
INTERSTATE 64	RT STA 712+00	EASTBOUND OUTLET	10		25	1	1	19	1
INTERSTATE 64	RT STA 716+00	EASTBOUND OUTLET	10		25	1	1	19	1
INTERSTATE 64	LT STA: 719+00 to 726+72	WESTBOUND EXTERIOR SHOULDER	772	772				772	
INTERSTATE 64	LT STA 722+50	WESTBOUND OUTLET	10		25	1	1	19	1
INTERSTATE 64	LT STA 726+50	WESTBOUND OUTLET	10		25	1	1	19	1
INTERSTATE 64	RT STA: 719+00 to 726+72	EASTBOUND EXTERIOR SHOULDER	772	772				772	
INTERSTATE 64	RT STA 719+00	EASTBOUND OUTLET (LP)	10		25	1			1
INTERSTATE 64	RT STA 720+00	EX EASTBOUND OUTLET					1	19	
INTERSTATE 64	RT STA 724+00	EASTBOUND OUTLET	10		25	1	1	19	1
FINAL (4 OF 4)									
		PROJECT TOTAL	74,225	72,395	4,575	183	163	74,179	183

MODEL: Schedules-4 [Sheet]
FILE NAME: S:\PROJECTS\2021\1061D21_IDOT\D8\DESIGN\CAD_SHEETS\WO 6\D876R99-sht-schedule.dgn

WILLETT HOFMANN & ASSOCIATES, INC.

USER NAME = greg		DESIGNED - GBG		REVISED -	
		DRAWN - KRH		REVISED -	
PLOT SCALE = $SCALE$		CHECKED - GFS		REVISED -	
PLOT DATE = 11/15/2024		DATE - 7/12/24		REVISED -	

STATE OF ILLINOIS
DEPARTMENT OF TRANSPORTATION

SCHEDULE OF QUANTITIES
PIPE UNDERDRAINS

SCALE: 1"=5' | SHEET 5 OF 5 SHEETS | STA. | TO STA.

F.A.I RTE.	SECTION	COUNTY	TOTAL SHEETS	SHEET NO.
64	82-(4,5,6,7)-1RS-2	ST. CLAIR	388	29
		CONTRACT NO. 76R99		
	ILLINOIS	FED. AID PROJECT		

STAGE PAVEMENT MARKING SCHEDULE

LOCATION			TEMPORARY PAVEMENT MARKING - LINE 4"- PAINT	TEMPORARY PAVEMENT MARKING LETTERS AND SYMBOLS - TYPE IV TAPE	TEMPORARY PAVEMENT MARKING - LINE 4" - TYPE IV TAPE	TEMPORARY PAVEMENT MARKING - LINE 6" - TYPE IV TAPE	TEMPORARY PAVEMENT MARKING - LINE 12" - TYPE IV TAPE	TEMPORARY RUMBLE STIRPS
I-64			(FOOT)	(SQ FT)	(FOOT)	(FOOT)	(FOOT)	(EACH)
STATION	TO STATION	LT/CTR/RT						
PRE-STAGE 1 SN 082-0306 & 082-0307								
319+00	334+00					319.66		
334+00	349+00					3913.34		
349+00	364+00					4467.12		
364+00	379+00					587.19		
PRE-STAGE 1 SN 082-0308 & 082-0309								
559+00	574+00					529.02		
574+00	589+00					4146.13		
589+00	604+00					5895.64		
604+00	618+00					879.12		
PRE-STAGE 2 SN 082-0306 & 082-0307								
319+00	334+00					449.66		
334+00	349+00		3341.67			4093.38		
349+00	364+00		4172.63			6091.98		
364+00	379+00					912.13		
PRE-STAGE 2 SN 082-0308 & 082-0309								
559+00	574+00					269.00		
574+00	589+00		2644.86			2845.62		
589+00	604+00		4388.33			4594.14		
604+00	618+00					618.54		
BUNKUM ROAD		082-0174						
STAGE 1								
8+50	17+75				1850.0		24	6
STAGE 2								
8+50	17+25				1850.0			6
RUBY LANE		082-0175						
STAGE 1								
32+80	41+40				1720.0		24	6
STAGE 2								
32+80	41+40				1720.0			6
US HWY 50		082-0179						
STAGE 1								
53+00	66+00				2600.0			
53+00	66+00				2600.0			
STAGE 2								
53+00	66+00				2600.0			
53+00	66+00				2600.0			

STAGE PAVEMENT MARKING SCHEDULE

LOCATION			TEMPORARY PAVEMENT MARKING - LINE 4"- PAINT	TEMPORARY PAVEMENT MARKING LETTERS AND SYMBOLS - TYPE IV TAPE	TEMPORARY PAVEMENT MARKING - LINE 4" - TYPE IV TAPE	TEMPORARY PAVEMENT MARKING - LINE 6" - TYPE IV TAPE	TEMPORARY PAVEMENT MARKING - LINE 12" - TYPE IV TAPE	TEMPORARY RUMBLE STIRPS
I-64			(FOOT)	(SQ FT)	(FOOT)	(FOOT)	(FOOT)	(EACH)
STATION	TO STATION	LT/CTR/RT						
IL 159		082-0176						
STAGE 1								
24+80	27+20	EB RT			240.0			
27+20	37+20	EB RT			1000.0			
28+45	40+80	EB CTR			1235.0			
28+25	40+25	WB CTR			1200.0			
29+00	32+25	WB LT			325.0			
32+25	41+00	WB LT			875.0			
32+25	33+75	WB LT INT			37.5			
13+26	18+85	EB RAMP			559.0			
14+15	18+45	WB RAMP			430.0			
41+00	41+50	WB LT			50.0			
41+50	43+25	WB LT INT			43.8			
STAGE 2								
23+53	27+20	EB RT			91.8			
23+53	27+20	EB CTR SKIP			91.8			
23+53	27+20	EB LT			367.0			
23+75	LN DROP	EB LT		41.50				
25+60	LN DROP	EB LT		41.50				
27+20	28+98	EB RT			44.5			
27+20	28+98	EB CTR SKIP			44.5			
27+20	29+35	EB LT			215.0			
29+35	STOP BAR	EB					24	
28+98	35+95	EB RT			697.0			
29+94	39+20	EB CTR SKIP			231.5			
29+94	39+20	EB LT			926.0			
37+55	39+20	EB RT			165.0			
0+00	2+60	WB RMP RT			260.0			
1+70	2+60	WB RMP LT			90.0			
36+50	THRU RT	EB		14.70				
37+50	THRU	EB		6.50				
1+60	THRU	WB RAMP		6.50				
29+55	38+71	WB RT			916.0			
29+55	31+40	WB CTR RT			46.3			
29+55	31+40	WB CTR LT			46.3			
29+55	32+69	WB LT			314.0			
31+40	32+40	WB CTR RT			25.0			
31+40	33+60	WB CTR LT			55.0			
33+85	41+00	WB CTR			178.8			
33+85	40+80	WB LT			695.0			
29+55	STOP BAR	WB					36	
19+60	29+94	EB EXIT NB			25.0			
19+60	29+94	EB EXIT NB			31.3			
19+60	29+94	EB EXIT NB			31.3			
0+00	2+35	EB ENT RMP			235.0			
1+20	2+35	EB ENT RMP			115.0			
19+00	38+71	WB EXIT SB			31.3			
19+00	38+71	WB EXIT SB			31.3			
19+00	38+71	WB EXIT SB			25.0			
19+00	STOP BAR	WB EXIT SB					24	
1+25	41+00	WB ENT RP			175.0			
1+25	41+00	WB ENT RP			200.0			
41+00	44+86	WB RT			386.0			
41+00	44+86	WB CTR RT			96.5			
41+00	42+95	WB CTR LT			48.8			
42+95	44+86	WB CTR LT			47.8			
41+00	44+86	WB LT			386.0			
TOTAL:			14547.5	110.7	30900.5	40611.7	132.0	24.0
PAY TOTAL:			14548	111	30901	40612	132	24

MODEL: 64_CL - IL64_Schedules
FILE NAME: c:\bms\keg-pw-01\new user\dms275751\D676R99-sht-Schedules.dgn

Kaskaskia Engineering Group, LLC
200 E. Main St., Suite 301, Salem, Illinois 62881
618.233.5077 phone
618.233.5077 fax
www.kaskaskiaeng.com
PROFESSIONAL REGISTRATIONS
Illinois Professional Design Firm 184.007711
Professional Engineering Group 20-5006585

USER NAME = rjo	DESIGNED - RJO	REVISED -	
	DRAWN - RJO	REVISED -	
	CHECKED - EJL	REVISED -	
PLOT DATE = 1/30/2025	DATE -	REVISED -	

STATE OF ILLINOIS
DEPARTMENT OF TRANSPORTATION

SCHEDULE OF QUANTITIES

SCALE: | SHEET OF SHEETS | STA. | TO STA.

F.A.I. RTE.	SECTION	COUNTY	TOTAL SHEETS	SHEET NO.
64	82-(4,5,6,7)-1R-2	ST. CLAIR		
		CONTRACT NO. 79R99		
	ILLINOIS	FED. AID PROJECT		

STAGE TEMPORARY CONCRETE BARRIER SCHEDULE

LOCATION		TEMPORARY BRIDGE TRAFFIC SIGNALS	TEMPORARY CONCRETE BARRIER	PINNING TEMPORARY CONCRETE BARRIER	RELOCATE TEMPORARY CONCRETE BARRIER	IMPACT ATTENUATORS, TEMPORARY (FULLY REDIRECTIVE, NARROW), TEST LEVEL 3	IMPACT ATTENUATORS, RELOCATE (FULLY REDIRECTIVE, NARROW), TEST LEVEL 3
I-64		(EACH)	(FOOT)	(EACH)	(FOOT)	(EACH)	(EACH)
STATION TO STATION							
PRE-STAGE 1 SN 082-0306							
12+27.8 = 346+63.5	EB					1.0	
346+63.5 349+00	EB		241.8				
349+00 352+08.2	EB		308.2	114.0			
PRE-STAGE 1 SN 082-0307							
348+74.9 349+00	WB		25.1				
349+00 354+11.6	WB		512.4	114.0			
354+11.6	WB					1.0	
PRE-STAGE 1 SN 082-0308							
587+00.1	EB					1.0	
587+00.1 589+00	EB		199.6				
589+00 592+14.5	EB		312.9	102.0			
PRE-STAGE 1 SN 082-0309							
589+26.6 594+22.7	WB		500.0	102.0			
594+22.7	WB					1.0	
PRE-STAGE 2 SN 082-0306							
345+40.0	EB						1.0
345+40.0 349+00	EB				361.2		
349+00 351+88.8	EB		100.0	114.0	188.8		
PRE-STAGE 2 SN 082-0307							
348+72.9 349+00	WB				27.1		
349+00 354+84.4	WB		75.0	114.0	510.4		
354+84.4	WB						1.0
PRE-STAGE 2 SN 082-0308							
586+83.9	EB						1.0
586+83.9 589+00	EB				216.2		
589+00 592+10.5	EB		12.5	102.0	296.3		
PRE-STAGE 2 SN 082-0309							
589+39.4 594+85.6	WB		50.0	102.0	500.0		
594+85.6	WB						1.0
BUNKUM ROAD	082-0174						
STAGE 1		1.0					
10+35 15+85			550.0			2.0	
STAGE 2							
10+00 15+50					550.0		2.0
RUBY LANE	082-0175						
STAGE 1		1.0					
34+80 39+30			450.0			2.0	
STAGE 2							
34+80 39+30					450.0		2.0
IL 159	082-0176						
STAGE 1							
32+95 36+32.5			337.5			1.0	
33+75 37+00			325.0			1.0	
STAGE 2							
33+27.5 36+15					287.5		1.0
33+67.5 38+30			87.5		375.0		1.0
US HWY 50	082-0179						
STAGE 1							
56+15 60+65			550.0			1.0	
57+12 61+65			550.0			1.0	
STAGE 2							
56+15 60+65					550.0		1.0
57+12 61+65					550.0		1.0
TOTAL		2.0	5187.5	864.0	4862.5	12.0	12.0
ADJUSTED TOTAL		2	5187.5	864.0	4862.5	12	12

STAGE PAVEMENT MARKING REMOVAL SCHEDULE

LOCATION		SHORT TERM PAVEMENT MARKING REMOVAL	PAVEMENT MARKING REMOVAL - WATER BLASTING
I-64		(SQ FT)	(SQ FT)
STATION TO STATION			
PRE-STAGE 1 SN 082-0306 & 082-0307			
319+00 334+00		159.83	
334+00 349+00		1956.67	1359.22
349+00 364+00		2233.56	983.75
364+00 379+00		293.60	
PRE-STAGE 1 SN 082-0308 & 082-0309			
559+00 574+00		264.51	
574+00 589+00		2073.07	1067.0
589+00 604+00		2947.82	1611.1
604+00 618+00		439.56	
PRE-STAGE 2 SN 082-0306 & 082-0307			
319+00 334+00		224.8	
334+00 349+00		2046.7	286.7
349+00 364+00		3046.0	297.9
364+00 379+00		456.1	
PRE-STAGE 2 SN 082-0306 & 082-0307			
559+00 574+00		134.5	
574+00 589+00		1422.8	
589+00 604+00		2297.1	
604+00 618+00		309.3	
BUNKUM ROAD	082-0174		
STAGE 1			
8+50 17+75		616.7	
STAGE 2			
8+50 17+75		640.7	
RUBY LANE	082-0175		
STAGE 1			
32+80 41+40		573.3	
STAGE 2			
32+80 41+40		597.3	
IL 159	082-0176		
STAGE 1			
SEE "STAGE PAVEMENT MARKING SCHEDULE" FOR STA TO STA LIMITS		1998.4	
STAGE 2			
SEE "STAGE PAVEMENT MARKING SCHEDULE" FOR STA TO STA LIMITS		2649.8	
US HWY 50	082-0179		
STAGE 1			
53+00 66+00		866.7	
53+00 66+00		866.7	
STAGE 2			
53+00 66+00		866.7	
53+00 66+00		866.7	
TOTAL		30848.8	5605.7
ADJUSTED TOTAL		30849	5606

Kaskaskia Engineering Group, LLC
200 E. Main St., Suite 101, Salem, Illinois 62881
618.233.5077 phone
618.233.5077 fax
www.kaskaskiaeng.com
PROFESSIONAL REGISTRATIONS
Illinois Professional Design Firm 184.004775
Professional Engineering Group 20-5500501

USER NAME = rjo	DESIGNED - RJO	REVISED -	
	DRAWN - RJO	REVISED -	
	CHECKED - EJL	REVISED -	
PLOT DATE = 1/30/2025	DATE -	REVISED -	

STATE OF ILLINOIS
DEPARTMENT OF TRANSPORTATION

SCHEDULE OF QUANTITIES

SCALE: | SHEET OF SHEETS | STA. TO STA.

F.A.I. RTE.	SECTION	COUNTY	TOTAL SHEETS	SHEET NO.
64	82-(4,5,6,7)-1R-2	ST. CLAIR		
		CONTRACT NO. 79R99		
	ILLINOIS	FED. AID PROJECT		

MODEL: 64_CL - IL64_Schedules - 2
FILE NAME: c:\bms\keg-pw-01\new user\dms2757\5\D876R99-sht-Schedules.dgn

LOCATION			PREFORMED PLASTIC PAVEMENT MARKING, TYPE D										THERMOPLASTIC PAVEMENT MARKING LETTERS AND SYMBOLS	THERMOPLASTIC PAVEMENT MARKING LINE 12" (SOLID YELLOW)		RAISED REFLECTIVE				SHORT TERM PAVEMENT MARKING**	SHORT TERM PAVEMENT MARKING REMOVAL	PAVEMENT MARKING REMOVAL - WATER BLASTING	GROOVING FOR RECESSED PAVEMENT MARKING - 7"	GROOVING FOR RECESSED PAVEMENT MARKING - 9"
			LINE - 6"						LINE - 8"							PAVEMENT MARKER								
			SKIP-DASH (WHITE)		SOLID (WHITE)		SOLID (YELLOW)		3' - 9' SKIP-DASH (WHITE)		SOLID (WHITE)					REMOVAL 1-WAY CRYSTAL		NEW 1-WAY CRYSTAL						
STA TO STA			FOOT		FOOT		FOOT		FOOT		FOOT		SQ FT	FOOT		EACH		EACH		FOOT	SQ FT	SQ FT	SQ FT	SQ FT
			EB	WB	EB	WB	EB	WB	EB	WB	EB	WB		EB	WB	EB	WB	EB	WB					
336+00	TO	348+00	600	600	910	1147	1200	1200			750	530		198	198	60	95	60	95	164	18	2444	6600	1440
348+00	TO	349+15	58	58	115	115	115	115	33	9		160		18	18	9	17	9	17	16	2	257	672	226
BRIDGE OMISSION																								
351+52	TO	366+00	1086	745	1449	1449	1449	1449		76				182	182	109	90	109	90	198	22	2689	8896	86
366+00	TO	381+00	1125	750	1500	1500	1500	1500	+					182	182	113	75	113	75	205	23	2746	9188	
381+00	TO	396+00	1125	750	1500	1500	1500	1500	375				41.5	173	192	113	75	113	75	205	23	2747	9188	
396+00	TO	411+00	1050	750	1500	1500	1500	1500	100				41.5	215	234	105	75	105	75	205	23	2783	9100	113
411+00	TO	426+00	750	750	1500	1500	1500	1500						267	267	75	75	75	75	205	23	2678	8750	
426+00	TO	441+00	750	750	1500	1500	1500	1500						268	268	75	75	75	75	205	23	2679	8750	
441+00	TO	456+00	750	750	1500	1500	1500	1500						269	269	75	75	75	75	205	23	2679	8750	
456+00	TO	471+00	750	750	1500	1500	1500	1500						269	269	75	75	75	75	205	23	2679	8750	
471+00	TO	486+00	750	750	1500	1500	1500	1500						269	269	75	75	75	75	205	23	2679	8750	
486+00	TO	501+00	750	750	1500	1500	1500	1500						269	269	75	75	75	75	205	23	2679	8750	
501+00	TO	516+00	763	750	1500	1900	1500	1500	227					269	269	100	75	100	75	205	23	2893	9231	256
516+00	TO	531+00	803	824	1500	1102	1500	1500	153	60	780	500		269	269	126	82	126	82	205	23	3087	8434	1679
531+00	TO	546+00	825	823	1450	2100	1500	1500	75	80	800	410		269	269	83	82	83	82	205	23	3367	9565	1536
546+00	TO	561+00	491	750	1500	1389	1500	1500	110	76	298	660		269	269	82	126	82	126	205	23	2937	8319	1286
561+00	TO	576+00	750	750	1500	1500	1500	1500						269	269	75	75	75	75	205	23	2679	8750	
576+00	TO	589+97	699	699	1397	1397	1397	1397						269	269	70	70	70	70	191	21	2508	8149	
BRIDGE OMISSION																								
591+49	TO	606+00	726	726	1451	1451	1451	1451						269	269	73	73	73	73	198	22	2598	8464	
606+00	TO	617+00	550	550	1100	1100	1100	1100	85					215	215	57	55	57	55	150	17	2005	6417	96
617+00	TO	646+67	202	202	407	407	407	407	101					537	537	41	41	41	41	205	15	1069	2370	113
646+67	TO	661+67	1030	750	1500	1500	1500	1500	281	97	520			269	269	182	147	182	147	205	23	3072	9077	1010
661+67	TO	676+67	750	930	1500	1500	1500	1500		281	754			269	269	75	116	75	116	205	23	3084	8959	
676+67	TO	691+67	750	750	1500	1500	1500	1500				506		269	269	75	88	75	88	205	23	2848	8750	569
691+67	TO	706+67	821	750	1500	933	1500	1500	75	71	960	780		269	269	82	128	82	128	205	23	3143	8172	2121
706+67	TO	721+67	750	750	1500	1500	1500	1500	149					269	269	38	75	38	75	205	23	2729	8750	168
721+67	TO	726+72	126	253	505	505	505	505	126					107	107	13	25	13	25	69	8	913	2799	142
		SUB-TOTALS	19579	18408	35784	35995	36124	36124	1889	749	4862	3546		6666	6704	2128	2136	2128	2136					
		TOTALS	182012						11046				83	13370		4264		4264		5075	555	68671	212348	10841

*STATION EQUATION 618+20.65 BK = 643+85.18 AH

**PAVEMENT MARKING WILL HAVE AN APPLICATION RATE OF 3 FOR RESURFACING

MODEL: RESURFACING [Sheet]
FILE NAME: c:\pw_work\pwdot\john.p.green@illinois.gov\d0849182\D876R99-sht-schedule.dgn

USER NAME = John.P.Green	DESIGNED -	REVISED -	STATE OF ILLINOIS DEPARTMENT OF TRANSPORTATION
	DRAWN -	REVISED -	
	CHECKED -	REVISED -	
PLOT DATE = 11/7/2024	DATE -	REVISED -	

SCHEDULE OF QUANTITIES
PAVEMENT MARKINGS

SCALE: | SHEET OF SHEETS | STA. TO STA.

F.A. I. RTE.	SECTION	COUNTY	TOTAL SHEETS	SHEET NO.
64	82-(4, 5, 6, 7)-1RS-2	ST. CLAIR	388	31
		CONTRACT NO. 76R99		
	ILLINOIS FED. AID PROJECT			

LOCATION			TEMPORARY PAVEMENT MARKINGS - LINE 6" - PAINT											TEMPORARY PREFORMED PLASTIC MARKING, TYPE D - INLAID 12" (SOLID YELLOW)	
			LINE - 6"						LINE - 8"				LETTERS & SYMBOLS		
			SKIP-DASH (WHITE)		SOLID (WHITE)		SOLID (YELLOW)		3' - 9' SKIP-DASH (WHITE)		SOLID (WHITE)				
STA TO STA			FOOT		FOOT		FOOT		FOOT		FOOT		SQ FT	FOOT	
			EB	WB	EB	WB	EB	WB	EB	WB	EB	WB		EB	WB
336+00	TO	348+00	600	600	910	1147	1200	1200			750	530		198	198
348+00	TO	349+15	58	58	115	115	115	115	33	9		160		18	18
BRIDGE OMISSION															
351+52	TO	366+00	1086	745	1449	1449	1449	1449		76				182	182
366+00	TO	381+00	1125	750	1500	1500	1500	1500	175					182	182
381+00	TO	396+00	1125	750	1500	1500	1500	1500	375				41.5	173	192
396+00	TO	411+00	1050	750	1500	1500	1500	1500	100				41.5	215	234
411+00	TO	426+00	750	750	1500	1500	1500	1500						267	267
426+00	TO	441+00	750	750	1500	1500	1500	1500						268	268
441+00	TO	456+00	750	750	1500	1500	1500	1500						269	269
456+00	TO	471+00	750	750	1500	1500	1500	1500						269	269
471+00	TO	486+00	750	750	1500	1500	1500	1500						269	269
486+00	TO	501+00	750	750	1500	1500	1500	1500						269	269
501+00	TO	516+00	763	750	1500	1900	1500	1500	227					269	269
516+00	TO	531+00	803	824	1500	1102	1500	1500	153	60	780	500		269	269
531+00	TO	546+00	825	823	1450	2100	1500	1500	75	80	800	410		269	269
546+00	TO	561+00	491	750	1500	1389	1500	1500	110	76	298	660		269	269
561+00	TO	576+00	750	750	1500	1500	1500	1500						269	269
576+00	TO	589+97	699	699	1397	1397	1397	1397						269	269
BRIDGE OMISSION															
591+49	TO	606+00	726	726	1451	1451	1451	1451						269	269
606+00	TO	617+00	550	550	1100	1100	1100	1100	85					215	215
617+00	TO	646+67	202	202	407	407	407	407	101					537	537
646+67	TO	661+67	1030	750	1500	1500	1500	1500	281	97	520			269	269
661+67	TO	676+67	750	930	1500	1500	1500	1500		281	754			269	269
676+67	TO	691+67	750	750	1500	1500	1500	1500				506		269	269
691+67	TO	706+67	821	750	1500	933	1500	1500	75	71	960	780		269	269
706+67	TO	721+67	750	750	1500	1500	1500	1500	149					269	269
721+67	TO	726+72	126	253	505	505	505	505	126					107	107
		SUB-TOTALS	19579	18408	35784	35995	36124	36124	2064	749	4862	3546		6666	6704
		TOTALS	182012						11221				83	13370	

*STATION EQUATION 618+20.65 BK = 643+85.18 AH

**TEMPORARY PAVEMENT MARKING WILL HAVE AN APPLICATION RATE OF 2 FOR RESURFACING

MODEL: MICROSURFACING [Sheet]
FILE NAME: c:\tw_work\pwidot\john.p.green@illinois.gov\d0849182\D876R99-sht-schedule.dgn

USER NAME = John,P,Green	DESIGNED -	REVISED -	STATE OF ILLINOIS DEPARTMENT OF TRANSPORTATION
	DRAWN -	REVISED -	
	CHECKED -	REVISED -	
PLOT DATE = 11/7/2024	DATE -	REVISED -	

SCHEDULE OF QUANTITIES
PAVEMENT MARKINGS

SCALE: | SHEET OF SHEETS | STA. | TO STA.

F.A.I. RTE.	SECTION	COUNTY	TOTAL SHEETS	SHEET NO.
64	82-(4, 5, 6, 7)-1R-2	ST. CLAIR	388	32
		CONTRACT NO. 76R99		
	ILLINOIS FED. AID PROJECT			

LOCATION			PREFORMED PLASTIC PAVEMENT MARKING, TYPE D - 6"							
			SOLID (WHITE)	SOLID (YELLOW)	3' - 9' SKIP-DASH (WHITE)	10' - 30' SKIP-DASH (WHITE)	SHORT TERM PAVEMENT MARKING*	SHORT TERM PAVEMENT MARKING REMOVAL	THERMOPLASTIC PAVEMENT MARKING LETTERS AND SYMBOLS	GROOVING FOR RECESSED PAVEMENT MARKING - 7"
STA TO STA			FOOT	FOOT	FOOT	FOOT	FOOT	SQ FT	SQ FT	SQ FT
WB IL 157***										
1+70	TO	11+30	960	960	830		131	15	41.5	3208
0+00	TO	17+30	1730	1730	280		236	26		4363
EB IL 157**										
3+05	TO	18+40	1535	1535	350	120	209	23	93.6	3990
1+60	TO	14+70	1310	1310			179	20		3057
WB IL 159										
0+97	TO	15+50	1453	1453			198	22		3390
2+50	TO	15+30	1280	1280			175	19		2987
0+00	TO	18+30	1830	1830	300	130	250	28	109.2	4620
EB IL 159										
2+80	TO	19+60	1680	1680	200	500	229	25	218.4	4153
1+60	TO	15+05	1345	1345			183	20		3138
2+00	TO	13+10	1110	1110			151	17		2590
WB US 50										
3+97	TO	15+00	1103	1103	210		150	17		2819
0+00	TO	5+30	530	530			72	8		1237
EB US 50										
0+00	TO	13+40	1340	1340		140	183	20		3127
4+15	TO	17+00	1285	1285			175	19	41.5	2998
TOTALS			18491	18491	2170	890	2522	280	504	45677

*VALUES ARE MULTIPLIED BY 3 TO REFLECT THE PREDICTED NUMBER OF TIMES THE ROADWAY WILL BE RESURFACED

**450 FT OF YELLOW PAINT AND WHITE IS ADDED DUE TO THE MEDIAN

***203 FT OF YELLOW PAINT ADDED DUE TO MEDIAN

MODEL: Schedule Sheet Page 3 [Sheet]
FILE NAME: c:\pw_work\pwdot\lewiska\d0849182\D876R99-sht-schedule.dgn

USER NAME = Kevin.Lewis	DESIGNED -	REVISED -
	DRAWN -	REVISED -
	CHECKED -	REVISED -
PLOT DATE = 2/5/2025	DATE -	REVISED -

STATE OF ILLINOIS
DEPARTMENT OF TRANSPORTATION

SCHEDULE OF QUANTITIES
PAVEMENT MARKINGS

SCALE: | SHEET OF SHEETS | STA. | TO STA.

F.A.I. RTE.	SECTION	COUNTY	TOTAL SHEETS	SHEET NO.
64	82-(4, 5, 6, 7)-1RS-2	ST. CLAIR	388	33
		CONTRACT NO. 76R99		
	ILLINOIS	FED. AID PROJECT		

LOCATION			TEMPORARY PAVEMENT MARKING - LINE 6" - PAINT				
			SOLID (WHITE)	SOLID (YELLOW)	3' - 9' SKIP-DASH (WHITE)	10' - 30' SKIP-DASH (WHITE)	LETTERS AND SYMBOLS
STA TO STA			FOOT	FOOT	FOOT	FOOT	SQ FT
WB IL 157***							
1+70	TO	11+30	960	960	830		41.5
0+00	TO	17+30	1730	1730	280		
EB IL 157**							
3+05	TO	18+40	1535	1535	350	120	93.6
1+60	TO	14+70	1310	1310			
WB IL 159							
0+97	TO	15+50	1453	1453			
2+50	TO	15+30	1280	1280			
0+00	TO	18+30	1830	1830	300	130	109.2
EB IL 159							
2+80	TO	19+60	1680	1680	200	500	218.4
1+60	TO	15+05	1345	1345			
2+00	TO	13+10	1110	1110			
WB US 50							
3+97	TO	15+00	1103	1103			
0+00	TO	5+30	530	530			
EB US 50							
0+00	TO	13+40	1340	1340		140	
4+15	TO	17+00	1285	1285	210		41.5
TOTALS			18491	18491	2170	890	504

**450 FT OF YELLOW PAINT AND WHITE IS ADDED DUE TO THE MEDIAN

***203 FT OF YELLOW PAINT ADDED DUE TO MEDIAN

MODEL: Schedule Sheet Page 2 [Sheet]
FILE NAME: c:\pw_work\pwidot\john.p.green@illinois.gov\d0849162\D876R99-sht-schedule.dgn

USER NAME = John.P.Green	DESIGNED -	REVISED -	
	DRAWN -	REVISED -	
	CHECKED -	REVISED -	
PLOT DATE = 12/5/2024	DATE -	REVISED -	

STATE OF ILLINOIS
DEPARTMENT OF TRANSPORTATION

SCHEDULE OF QUANTITIES
PAVEMENT MARKINGS

SCALE: | SHEET OF SHEETS | STA. | TO STA.

F.A.I. RTE.	SECTION	COUNTY	TOTAL SHEETS	SHEET NO.
64	82-(4, 5, 6, 7)-1RS-2	ST. CLAIR	388	34
		CONTRACT NO. 76R99		
	ILLINOIS	FED. AID PROJECT		

SIGN SCHEDULE

SIGN ID	LOCATION		SIGN NUMBER	DESCRIPTION	SIGN SIZE	NUMBER OF POSTS	WOOD POST	METAL POST	ATTACHED TO POLE	METAL SIGN SUPPORT	WOOD SIGN SUPORT	REMOVE SIGN PANEL	REMOVE SIGN PANEL ASSEMBLY		SIGN PANEL			MILE POST MARKER ASSEMBLY
	STATION	DIRECTION										TYPE 3	TYPE A	TYPE B	TYPE 1	TYPE 2	TYPE 3	
					(W) in. x in. (H)					FT	FT	SF	EACH	EACH	SF	SF	SF	EACH
1	337+80	WB	W4 - 3R	MERGE SIGN	48 X 48		Y				18			1		16		
2	338+50	FR	E5 - 1A	EXIT SIGN	78 X 60	2	Y				38	32.5					32.5	
3	343+00	WB	D10 - 5	MILE MARKER	18 X 60			Y		18								1
3A	343+00	EB	D10 - 5	MILE MARKER	18 X 60			Y		19			1					
4	345+30	EB	W4 - 3R	MERGE SIGN	36 X 48				Y					1		12		
5	346+50	WB	W13 - 3	ADVISORY RAMP SPEED	48 X 60				Y	20						20		
6	353+55	WB	D10 - 5	MILE MARKER	18 X 60			Y		19								1
6A	353+55	EB	D10 - 5	MILE MARKER	18 X 60				Y				1					
7	364+50	WB	D10 - 5	MILE MARKER	18 X 60			Y		19								1
7A	364+50	EB	D10 - 5	MILE MARKER	18 X 60				Y				1					
8	370+80	EB	M1 - 4	U.S. ROUTE SIGN	36 X 36		Y				18.5				9			
8A	370+80	EB	M1 - 1	INTERSTATE ROUTE SIGN	36 X 36		Y								9			
8B	370+80	EB	M3 - 2	CARDINAL DIRECTION AUXILIARY	36 X 18		Y								4.5			
8C	370+80	EB	M3 - 2	CARDINAL DIRECTION AUXILIARY	36 X 18		Y								4.5			
9	374+00	WB	D10 - 5	MILE MARKER	18 X 60			Y		19								1
9A	374+00	EB	D10 - 5	MILE MARKER	18 X 60				Y				1					
10	378+80	EB	R2 - 1	SPEED LIMIT SIGN	36 X 72			Y		20				1		18		
11	382+50	WB	D10 - 5	MILE MARKER	18 X 60			Y		20								1
11A	382+50	EB	D10 - 5	MILE MARKER	18 X 60			Y		20			1					
12	383+60	EB	W9 - 1R	RIGHT LANE ENDS	36 X 36		Y				18			1		9		
13	392+80	WB	D10 - 5	MILE MARKER	18 X 60			Y		19								1
13A	392+80	EB	D10 - 5	MILE MARKER	18 X 60			Y		19			1					
14	394+80	EB	W4 - 2R	RIGHT LANE ENDS	36 X 36		Y				17					9		
15	406+50	WB	D10 - 5	MILE MARKER	18 X 60			Y		17								1
15A	406+50	EB	D10 - 5	MILE MARKER	18 X 60			Y		19			1					
16	416+20	WB	D10 - 5	MILE MARKER	18 X 60			Y		18								1
16A	416+20	EB	D10 - 5	MILE MARKER	18 X 60			Y		19			1					
17	426+50	WB	D10 - 5	MILE MARKER	18 X 60			Y		19								1
17A	426+50	FR	D10 - 5	MILE MARKER	18 X 60			Y		17			1					
18	427+75	EB	R5 - 11	AUTHORIZED VEHICLE SIGN	30 X 24			Y							5			
18A	427+75	EB	R3 - 4	NO U-TURN	36 X 36			Y		10			1		9			
19	428+60	WB	R5 - 11	AUTHORIZED VEHICLE SIGN	30 X 24			Y							5			
19A	428+60	WB	R3 - 4	NO U-TURN	36 X 36			Y		10			1		9			
20	436+50	WB	D10 - 5	MILE MARKER	18 X 60			Y		19								1
20A	436+50	EB	D10 - 5	MILE MARKER	18 X 60			Y		18			1					
21	449+00	WB	D10 - 5	MILE MARKER	18 X 60			Y		20								1
21A	449+00	EB	D10 - 5	MILE MARKER	18 X 60			Y		20			1					
22	459+60	WB	D10 - 5	MILE MARKER	18 X 60			Y		19								1
22A	459+60	FR	D10 - 5	MILE MARKER	18 X 60			Y		19			1					
23	468+20	WB	D10 - 5	MILE MARKER	18 X 60			Y		18								1
23A	468+20	EB	D10 - 5	MILE MARKER	18 X 60			Y		18			1					
24	479+50	WB	D10 - 5	MILE MARKER	18 X 60			Y		19								1
24A	479+50	EB	D10 - 5	MILE MARKER	18 X 60			Y		19			1					
25	490+80	WB	D10 - 5	MILE MARKER	18 X 60			Y		19								1
25A	490+80	EB	D10 - 5	MILE MARKER	18 X 60			Y		20			1					
26	497+00	WB	R2 - 4A	SPEED LIMIT SIGN	36 X 72		Y				22			1		18		
27	501+20	WB	D10 - 5	MILE MARKER	18 X 60			Y		18								1
27A	501+20	EB	D10 - 5	MILE MARKER	18 X 60			Y		18			1					
28	505+00	WB	M3 - 2	CARDINAL DIRECTION AUXILIARY	36 X 18		Y			17.5					4.5			
28A	505+00	WB	M1 - 1	INTERSTATE ROUTE SIGN	36 X 36		Y						1		9			
28B	505+00	WB	M3 - 2	CARDINAL DIRECTION AUXILIARY	36 X 18		Y								4.5			
28C	505+00	WB	M1 - 4	U.S. ROUTE SIGN	36 X 36		Y						1		9			
29	511+55	WB	D10 - 5	MILE MARKER	18 X 60			Y		18								1
29A	511+55	FR	D10 - 5	MILE MARKER	18 X 60			Y		19			1					
30	522+20	WB	D10 - 5	MILE MARKER	18 X 60			Y		18								1
30A	522+20	EB	D10 - 5	MILE MARKER	18 X 60			Y		18			1					

MODEL: PVMNT MKING SCHEDULE [Sheet]
FILE NAME: c:\pw_work\pwidot\john.p.green@illinois.gov\d0949182\D876R99-sht-schedule.dgn

USER NAME = John.P.Green	DESIGNED -	REVISED -	**STATE OF ILLINOIS** **DEPARTMENT OF TRANSPORTATION**
	DRAWN -	REVISED -	
	CHECKED -	REVISED -	
PLOT DATE = 11/12/2024	DATE -	REVISED -	

SCHEDULE OF QUANTITIES
MISCELLANEOUS SIGN PLANS

SCALE: | SHEET 1 OF 2 SHEETS | STA. | TO STA.

F.A. RTE.	SECTION	COUNTY	TOTAL SHEETS	SHEET NO.
64	82-(4, 5, 6, 7)-1RS-2	ST. CLAIR	388	035
		CONTRACT NO. 76R99		
	ILLINOIS FED. AID PROJECT			

SIGN SCHEDULE																		
SIGN ID	LOCATION		SIGN NUMBER	DESCRIPTION	SIGN SIZE	NUMBER OF POSTS	WOOD POST	METAL POST	ATTACHED TO POLE	TELESCOPING STEEL SIGN SUPPORT	WOOD SIGN SUPORT	REMOVE SIGN PANEL	REMOVE SIGN PANEL ASSEMBLY		SIGN PANEL			MILE POST MARKER ASSEMBLY
	STATION	DIRECTION										TYPE 3	TYPE A	TYPE B	TYPE 1	TYPE 2	TYPE 3	
					in. x in.					FT	FT	SF	EACH	EACH	SF	SF	SF	EACH
31	523+60	EB	W13 - 3	ADVISORY RAMP SPEED	36 X 48				Y							12		
32	526+20	WB	W4 - 1R	MERGE SIGN	48 X 48				Y					1		16		
33	526+60	EB	E5 - 1A	EXIT NUMBER SIGN	78 X 60	2	Y			36		32.5		1			32.5	
34	532+60	WB	D10 - 5	MILE MARKER	18 X 60			Y		19								1
34A	532+60	EB	D10 - 5	MILE MARKER	18 X 60			Y		19			1					
35	534+10	EB	W4 - 1L	MERGE SIGN	48 X 48		Y			18						16		
36	541+10	WB	W4 - 1R	MERGE SIGN	48 X 48		Y				18			1		16		
37	542+20	EB	M3 - 2	CARDINAL DIRECTION AUXILIARY	36 X 18		Y				18		1		4.5			
37A	542+20	EB	M1 - 1	INTERSTATE ROUTE SIGN	36 X 36		Y								9			
38	543+50	EB	D10 - 5	MILE MARKER	18 X 60			Y		19								1
38A	543+50	WB	D10 - 5	MILE MARKER	18 X 60			Y		19			1					
39	544+50	EB	W4 - 1R	MERGE SIGN	48 X 48		Y			17				1		16		
40	546+30	WB	W13 - 3	ADVISORY RAMP SPEED	48 X 60				Y				1			20		
41	554+15	WB	D10 - 5	MILE MARKER	18 X 60			Y		19								1
41A	554+15	EB	D10 - 5	MILE MARKER	18 X 60			Y		20								
42	564+50	EB	D10 - 5	MILE MARKER	18 X 60			Y		20								1
42A	564+50	WB	D10 - 5	MILE MARKER	18 X 60			Y		18								
43	566+80	EB	M3 - 2	CARDINAL DIRECTION AUXILIARY	36 X 18			Y		24					4.5			
43A	566+80	EB	M1 - 4	U.S. ROUTE SIGN	36 X 36			Y							9			
43B	566+80	EB	M1 - 1	INTERSTATE ROUTE SIGN	36 X 36			Y					1		9			
43C	566+80	EB	M3 - 2	CARDINAL DIRECTION AUXILIARY	36 X 18			Y							4.5			
44	571+80	EB	R2 - 4A	SPEED LIMIT SIGN	36 X 72			Y		20				1		18		
45	573+50	WB	D10 - 5	MILE MARKER	18 X 60			Y		19								1
45A	573+50	EB	D10 - 5	MILE MARKER	18 X 60			Y		19			1					
46	585+50	WB	D10 - 5	MILE MARKER	18 X 60			Y		19								1
46A	585+50	EB	D10 - 5	MILE MARKER	18 X 60			Y		22			1					
47	596+20	WB	D10 - 5	MILE MARKER	18 X 60			Y		19								1
47A	596+20	EB	D10 - 5	MILE MARKER	18 X 60			Y		21			1					
48	606+40	WB	D10 - 5	MILE MARKER	18 X 60			Y		20								1
48A	606+40	EB	D10 - 5	MILE MARKER	18 X 60			Y		20			1					
49	617+40	WB	D10 - 5	MILE MARKER	18 X 60			Y		20								1
49A	617+40	EB	D10 - 5	MILE MARKER	18 X 60			Y		20			1					
50	653+50	WB	D10 - 5	MILE MARKER	18 X 60			Y		18								1
50A	653+50	EB	D10 - 5	MILE MARKER	18 X 60				Y				1					
51	654+00	WB	R2 - 4A	SPEED LIMIT SIGN	36 X 72		Y				20					18		
52	658+80	EB	R8 - 3A	NO PARKING SIGN	36 X 36			Y		17					9			
53	662+20	WB	M3 - 2	CARDINAL DIRECTION AUXILIARY	36 X 18		Y				29.5				4.5			
53A	662+20	WB	M1 - 4	U.S. ROUTE SIGN	36 X 36		Y								9			
53B	662+20	WB	M1 - 1	INTERSTATE ROUTE SIGN	36 X 36		Y								9			
53C	662+20	WB	M3 - 2	CARDINAL DIRECTION AUXILIARY	36 X 18		Y						1		4.5			
54	663+40	WB	D10 - 5	MILE MARKER	18 X 60			Y		21								1
54A	663+40	EB	D10 - 5	MILE MARKER	18 X 60			Y		24			1					
55	673+60	EB	D10 - 5	MILE MARKER	18 X 60			Y		20								1
55A	673+60	WB	D10 - 5	MILE MARKER	18 X 60			Y		19			1					
56	679+20	WB	R8 - 3A	NO PARKING SIGN	36 X 36			Y		14.5					9			
57	679+70	WB	W4 - 1	MERGE SIGN	48 X 48		Y				17			1		11.7		
58	683+20	WB	D10 - 5	MILE MARKER	18 X 60			Y		19								1
58A	683+20	EB	D10 - 5	MILE MARKER	18 X 60			Y		20			1					
59	692+30	EB	W4 - 1	MERGE SIGN	48 X 48		Y				18					16		
60	694+00	EB	R8 - 3	NO PARKING SIGN	36 X 36			Y		16					9			
61	695+70	EB	D10 - 5	MILE MARKER	18 X 60			Y		20								1
61A	695+70	WB	D10 - 5	MILE MARKER	18 X 60			Y		19			1					
62	705+30	EB	M3 - 2	CARDINAL DIRECTION AUXILIARY	36 X 18		Y				25				4.5			
62A	705+30	EB	M3 - 2	CARDINAL DIRECTION AUXILIARY	36 X 18		Y						1		4.5			
62B	705+30	EB	M1 - 4	U.S. ROUTE SIGN	36 X 36		Y								9			
62C	705+30	EB	M1 - 1	INTERSTATE ROUTE SIGN	36 X 36		Y						1		9			
63	705+60	EB	D10 - 5	MILE MARKER	18 X 60			Y		19								1
63A	705+60	WB	D10 - 5	MILE MARKER	18 X 60			Y		19			1					

MODEL: RAMP PAVEMENT [Sheet]
FILE NAME: c:\pw_work\pwidot\john.p.green@illinois.gov\d0849182\D876R99-sht-schedule.dgn

USER NAME = John.P.Green	DESIGNED -	REVISED -	**STATE OF ILLINOIS** **DEPARTMENT OF TRANSPORTATION**
	DRAWN -	REVISED -	
	CHECKED -	REVISED -	
PLOT DATE = 11/12/2024	DATE -	REVISED -	

SCHEDULE OF QUANTITIES
MISCELLANEOUS SIGN PLANS

SCALE: | SHEET 2 OF 2 SHEETS | STA. | TO STA.

F.A.I. RTE.	SECTION	COUNTY	TOTAL SHEETS	SHEET NO.
64	82-(4, 5, 6, 7)-1RS-2	ST. CLAIR	388	036
		CONTRACT NO. 76R99		
	ILLINOIS FED. AID PROJECT			

SIGN SCHEDULE

SIGN ID	LOCATION				DESCRIPTION	REMOVE SIGN PANEL TYPE 3	SIGN PANEL TYPE 3	TRANSFER SERVICE SIGN	REMOVE GROUND MOUNTED SIGN SUPPORT	REMOVE CONCRETE FOUNDATION (GROUND MOUNT)	NUMBER OF POSTS	WOOD SIGN SUPPORT	STRUCTURAL STEEL SIGN SUPPORT - BREAKAWAY*						CONCRETE FOUNDATIONS	REMARKS
	STATION		ALIGNMENT	DIRECTION									POST SIZE AND TYPE	A	B	L1	L2	WEIGHT		
	EXISTING	PROPOSED				SQ FOOT	SQ FOOT	EACH	EACH	EACH	EACH	FOOT		FOOT	FOOT	FOOT	FOOT	LBS	CU YARD	
1	347+00	347+00	I-70	WB	GUIDE SIGN	202.5	180.0													PLACE SIGNS ON EXISTING STRUCTURE
1a	347+00	347+00	I-70	WB	GUIDE SIGN	202.5	249.8													PLACE SIGNS ON EXISTING STRUCTURE
2	361+00	361+00	I-70	WB	GUIDE SIGN	185.6	243.0		2	2	2		W14 X 38	2.7	8.1	25.5	23.5	1861	4.2	
3	379+10	379+10	I-70	WB	RECREATIONAL GUIDE SIGN	274.3	280.5		2	2	2		W16 X 45	3.3	9.9	26.1	22.8	2199	4.5	
4	396+30	396+30	I-70	WB	GUIDE SIGN	176.0	180.0													PLACE SIGNS ON EXISTING STRUCTURE
4a	396+30	396+30	I-70	WB	GUIDE SIGN	179.7	252.0													PLACE SIGNS ON EXISTING STRUCTURE
5	402+00	402+00	I-70	WB	LOGO GUIDE SIGN	195.7	180.0	5	2	2	2		W10 X 26	3.0	9.0	19.6	17.8	971	2.5	
6	410+90	410+90	I-70	WB	LOGO GUIDE SIGN	200.0	200.0	6	2	2	2		W12 X 26	4.0	12.0	18.3	15.3	871	2.8	
7	420+35	420+35	I-70	WB	LOGO GUIDE SIGN	187.7	200.0	3	2	2	2		W12 X 26	4.0	12.0	18.2	15.2	866	2.8	
8	481+00	481+00	I-70	WB	GUIDE SIGN	111.6	119.0		2	2	2		W6 X 15	3.4	10.2	14.5	12.0	397	1.4	
9	555+50	555+50	I-70	WB	GUIDE SIGN	215.9	225.0		2	2	2		W14 X 38	3.0	9.0	24.2	22.7	1780	4.2	
10	562+50	562+50	I-70	WB	LOGO GUIDE SIGN	282.5	270.0	5	2	2	2		W14 X 38	4.0	12.0	21.5	20.5	1596	4.2	
11	578+00	578+00	I-70	WB	GUIDE SIGN	205.2	217.5													PLACE SIGNS ON EXISTING STRUCTURE
12	593+15	593+15	I-70	WB	SUPPLEMENTAL GUIDE SIGN	150.4	90.3		2	2	2		W10 X 26	1.9	5.7	25.2	28.1	1385	2.5	
13	599+20	599+20	I-70	WB	LOGO GUIDE SIGN	198.3	200.0	6	2	2	2		W14 X 38	4.0	12.0	21.0	25.8	1778	4.2	
14	607+00	607+00	I-70	WB	GUIDE SIGN	210.1	217.5		2	2	2		W16 X 45	3.0	9.0	27.5	26.7	2437	4.5	
15	615+50	615+50	I-70	WB	LOGO GUIDE SIGN	191.7	200.0	6	2	2	2		W12 X 26	4.0	12.0	18.8	15.8	897	2.8	
16	659+00	659+00	I-70	WB	LOGO GUIDE SIGN	183.7	200.0	6	2	2	2		W14 X 30	4.0	12.0	20.5	16.5	1110	3.8	
17	701+00	701+00	I-70	WB	GUIDE SIGN	93.5	99.0													PLACE SIGNS ON EXISTING STRUCTURE
18	707+60	707+60	I-70	WB	LOGO GUIDE SIGN	228.3	180.0	6	2	2	2		W14 X 30	3.0	9.0	21.0	21.9	1287	3.8	RELOCATE "GAS" LOGO SIGNAGE
19	394+80	394+80	I-70	EB	GUIDE SIGN	98.9	115.5		2	2	2		W8 X 18	3.3	9.9	15.7	12.4	505	1.4	
20	422+40	422+40	I-70	EB	LOGO GUIDE SIGN	187.7	200.0	6	2	2	2		W16 X 45	4.0	12.0	20.7	26.7	2130	4.5	
21	434+75	434+75	I-70	EB	LOGO GUIDE SIGN	187.7	200.0	6	2	2	2		W14 X 30	4.0	12.0	20.0	22.0	1260	3.8	
22	444+75	444+75	I-70	EB	LOGO GUIDE SIGN	200.0	200.0	5	3	3	2		W12 X 26	4.0	12.0	19.0	18.0	962	2.8	
23	455+50	455+50	I 70	EB	GUIDE SIGN	161.7	217.5													PLACE SIGNS ON EXISTING STRUCTURE
24	460+00	460+00	I-70	EB	GUIDE SIGN	282.5	270.0	5	2	2	2		W16 X 45	4.0	12.0	23.0	24.5	2138	4.5	
25	481+00	481+00	I-70	EB	LOGO GUIDE SIGN	189.0	217.5		2	2	2		W14 X 38	3.0	9.0	23.3	20.7	1669	4.2	
26	493+25	493+25	I-70	EB	SUPPLEMENTAL GUIDE SIGN	141.8	90.3		2	2	2		W8 X 18	1.9	5.7	18.0	16.1	614	1.4	
27	507+20	507+20	I-70	EB	GUIDE SIGN	222.5	225.0													PLACE SIGNS ON EXISTING STRUCTURE
28	519+40	519+40	I-70	EB	GUIDE SIGN	209.0	225.0		2	2	2		W14 X 38	3.0	9.0	23.0	23.6	1772	4.2	
29	536+75	536+75	I-70	EB	GUIDE SIGN	85.3	93.5													PLACE SIGNS ON EXISTING STRUCTURE
30	555+00	555+00	I-70	EB	LOGO GUIDE SIGN	180.4	200.0	3	2	2	2		W14 x 30	4.0	12.0	19.3	21.0	1211	3.8	
31	562+75	562+75	I-71	EB	GUIDE SIGN	74.0	93.5		2	2	2		W10 X 22	2.2	6.6	17.7	20.0	829	2.4	
32	605+00	609+00	I 70	EB	LOGO GUIDE SIGN	191.7	200.0	6	2	2	2		W14 X 30	4.0	12.0	19.7	21.7	1240	3.8	
33	609+00	614+40	I-70	EB	LOGO GUIDE SIGN	233.0	180.0	6	2	2	2		W14 X 30	3.0	9.0	21.4	22.9	1330	3.8	RELOCATE "GAS" LOGO SIGNAGE
34	614+40	605+00	I-70	EB	GUIDE SIGN	93.1	93.5		2	2	2		W10 X 22	2.2	6.6	18.0	19.1	816	2.4	
35	655+00	655+00	I-70	EB	GUIDE SIGN	93.1	99.0		2	2	2		W10 X 22	2.2	6.6	20.8	20.5	909	2.4	
36	706+00	706+00	I-70	EB	LOGO GUIDE SIGN	139.8	270.0	3	2	2	2		W14 X 38	4.0	12.0	22.3	19.3	1583	4.2	
37	690+00	690+00	I-70	EB	LOGO GUIDE SIGN	185.3	200.0	6	2	2	2		W12 X 26	4.0	12.0	18.8	20.1	1010	2.8	
38	526+75	526+75	I-70	EB	STANDARD SIGN E5-1a	30.0	32.5		2		2	34.0		1.3	3.9	12.0	12.0			
39	547+40	547+40	I-70	WB	STANDARD SIGN E5-1a	30.0	32.5		2		2	34.0		1.3	3.9	12.0	12.0			
40	662+15	662+15	I-70	EB	STANDARD SIGN E5-1a	30.0	32.5		2		2	34.0		1.3	3.9	12.0	12.0			
41	696+50	696+50	I-70	WB	STANDARD SIGN E5-1a	30.0	32.5		2		2	34.0		1.3	3.9	12.0	12.0			
42	14+33	14+33	EB OFF RAMP TO US 50	EB	GUIDE SIGN	96.0	96.0													PLACE SIGNS ON EXISTING STRUCTURE
42a	14+33	14+33	EB OFF RAMP TO US 50	EB	GUIDE SIGN	102.0	102.0													PLACE SIGNS ON EXISTING STRUCTURE
42b	14+33	14+33	EB OFF RAMP TO US 50	EB	GUIDE SIGN	102.0	102.0													PLACE SIGNS ON EXISTING STRUCTURE
43		712+00	I-70	WB	LOGO GUIDE SIGN		90.0				2		W8 X 18	3.0	9.0	15.0	16.5	567	1.4	
44		648+00	I-70	EB	LOGO GUIDE SIGN		90.0				2		W8 X 18	3.0	9.0	17.0	17.5	621	1.4	
TOTALS						7451	7984	89	69	61		136						40602	103	

NOTE:
ALL SIGN PANELS AND SUPPORTS REMOVED ARE TO BE RETURNED TO IDOT OPERATIONS.
PLEASE CALL JEFFERY ABEL 618-346-3283.

*SEE DETAIL SHEETS 52 - 54 FOR MOUNTING DETAILS.

MODEL: Sheet-1
FILE NAME: pw://cdmsmith-az02-ew.bentley.com:pw_p11/Documents/338073/29245710 Transportation/02 Engineering Services/01 Roadway/10 BIM_CADD/01 Working/Sheets/76R99-sht-details_signing panels.dgn

CDM Smith

USER NAME = PELLOTCA	DESIGNED - CAP	REVISED -	
	DRAWN - CAP	REVISED -	
PLOT SCALE = 0.16666633 ' / in.	CHECKED - AAC	REVISED -	
PLOT DATE = 11/13/2024	DATE - 09/09/2024	REVISED -	

STATE OF ILLINOIS
DEPARTMENT OF TRANSPORTATION

SIGNING PLANS

SCALE: NONE | SHEET 36A OF 388 SHEETS | STA. | TO STA.

F.A.I. RTE.	SECTION	COUNTY	TOTAL SHEETS	SHEET NO.
64	82-(4,5,6,7)-1RS-2	ST. CLAIR	388	36A
		CONTRACT NO. 76R99		
	ILLINOIS FED. AID PROJECT			

SIGN TRUSS REPAIR SCHEDULE

Structure Number	Type	Locking Pin Repair A	Tighten Anchor Bolts (Span) Repair B	Tighten Bridge Parapet Anchor Bolts Repair C	Tighten Cantilever Connection Repair D	Replace / Tighten Sign Mounting Clips Repair E	Handhole to be Adjusted Repair F	Replace Safety Chain Repair G	Tighten U-Bolt Repair H	Removal of Sign Lighting No Salvage Repair I	Remove Electric Service Repair J	Comments
8S082I064L008.5	Span	4	-	-	-	-	-	-	-	2	1	
8S082I064L009.4	Span	4	1	-	-	-	1	-	-	2	1	
8B082I064R010.6	Bridge	-	-	1	-	-	-	-	-	1	1	
8S082I064L010.8	Span	-	-	-	-	1	-	1	2	-	-	No Lights DMS
8B082I064R011.5	Bridge	-	-	-	-	-	-	-	-	2	1	
8B082I064R012.1	Bridge	-	-	1	-	-	-	-	-	1	1	
8C082I064L012.9	Cantilever	-	-	-	-	-	-	-	-	1	1	
8S082I064R014.1	Span	3	1	-	-	-	2	-	-	-	-	Plugs at Top of Right Support
8C082I064L014.7	Cantilever	-	-	-	1	-	-	-	-	1	1	Upper Connection
Totals		11	2	2	1	1	3	1	2	10	7	

Repair A: Repair Handhole Locking Pin Connections - OS-A-11
Repair B: Tighten Support Anchor Bolt - Span OS-A-6A
Repair C: Tighten Bridge Parapet Anchor - BM-3
Repair D: Tighten Cantilever Connection - OSC-A-3
Repair E: Replace / Tighten Sign Mount
Repair F: Handhole to be Adjusted - OS-A-6
Repair G: Safety Chain - OS-A-11
Repair H: Tighten U-Bolt - OS-A-1
Repair I: Removal of Sign Lighting No Salvage
Repair J: Remove Electric Service

Notes:
Removal of Existing Sign Lighting Units and Terminate Electrical Service to Truss on all Sign Structures Noted.

MODEL: Default
FILE NAME: i:\2023\6044\WO 5\Engineering\OHSS SHEETS\D876R99-001-REPAIR TABLE.dgn
12/9/2024 12:47:39 PM

ABNA DESIGN FIRM REG. 184.002117

USER NAME =	DESIGNED - SEA	REVISED -	
	CHECKED - FH	REVISED -	
PLOT SCALE =	DRAWN - MBJ	REVISED -	
PLOT DATE =	CHECKED - SEA	REVISED -	

STATE OF ILLINOIS
DEPARTMENT OF TRANSPORTATION

SIGN TRUSS REPAIR SCHEDULE

SHEET 1 OF 9 SHEETS

F.A.I. RTE.	SECTION	COUNTY	TOTAL SHEETS	SHEET NO.
64	82-(4,5,6,7)-1R-2	ST CLAIR	386	37
		CONTRACT NO. 76R99		
	ILLINOIS	FED. AID PROJECT		

OVERALL LOCATION MAP
WITH
BRIDGE LOCATIONS

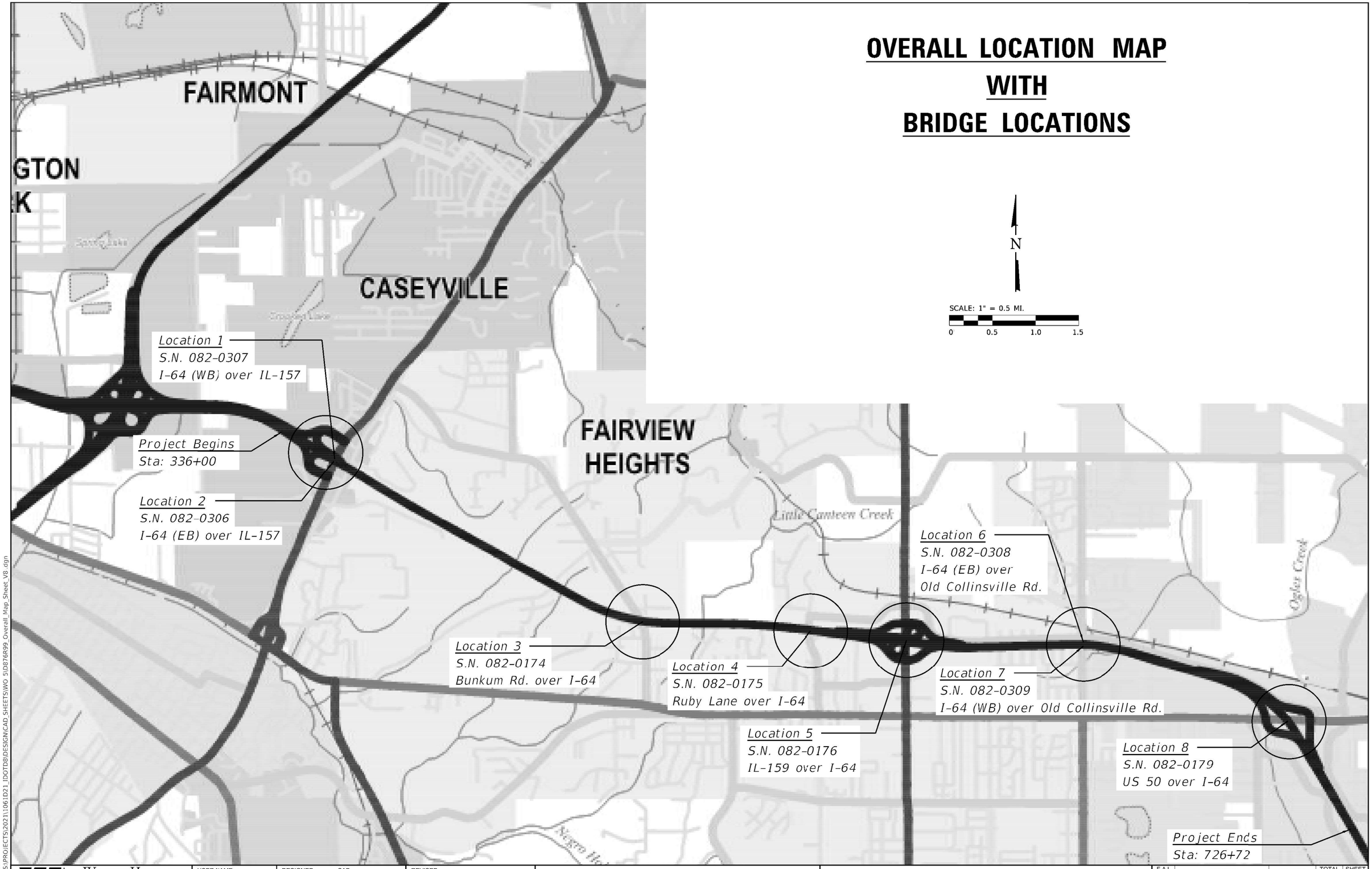

N

SCALE: 1" = 0.5 MI.

0 0.5 1.0 1.5

MODEL: Default
FILE NAME: S:\PROJECTS\2021\1061D21_IDOT\DB\DESIGN\CAD_SHEETS\WO 5\D876R99_Overall_Map_Sheet_V8.dgn

11/21/2024 5:13:54 PM

WILLETT HOFMANN & ASSOCIATES INC
ENGINEERING ARCHITECTURE LAND SURVEYING
809 EAST 2ND STREET, DIXON, IL 61021-0367
T: 815-284-3351 DESIGN FIRM: #184-006918

USER NAME =	DESIGNED - SAB	REVISED -	
	CHECKED - SAB	REVISED -	
PLOT SCALE =	DRAWN - RDA	REVISED -	
PLOT DATE =	CHECKED - SAB	REVISED -	

STATE OF ILLINOIS
DEPARTMENT OF TRANSPORTATION

OVERALL LOCATION MAP

F.A.I. RTE.	SECTION	COUNTY	TOTAL SHEETS	SHEET NO.
64	82-(4,5,6,7)-1RS-2	ST. CLAIR	388	38
	WHA# 1061D21	CONTRACT NO. 76R99		
	ILLINOIS	FED. AID PROJECT		

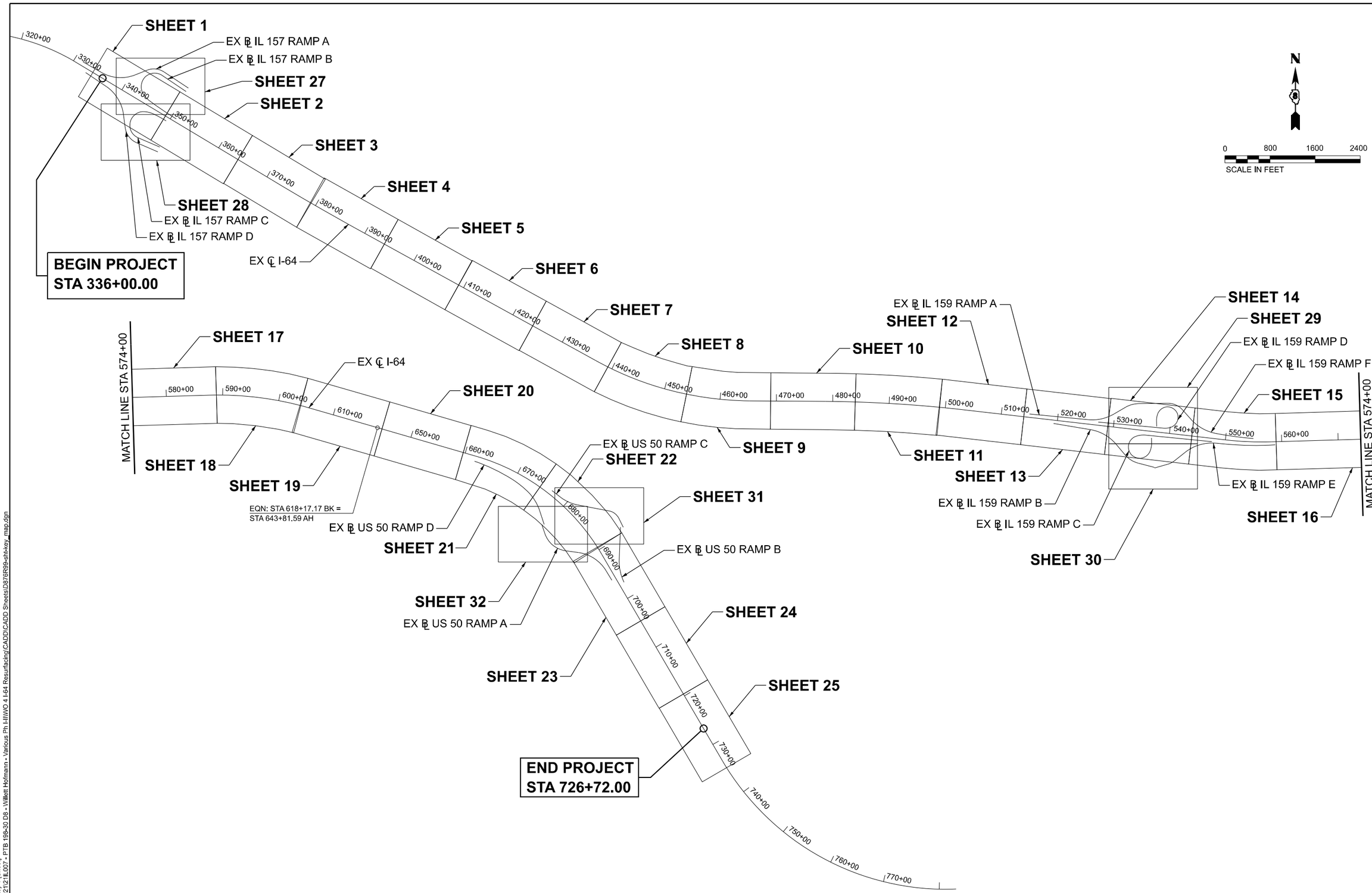

MODEL: Key 1 - Key 1 [Sheet]
FILE NAME: S:\2021\21IL007 - PTB 198-30 D8 - Willett Hofmann - Various Ph I\IIWO 4 I-64 Resurfacing\CADD\CADD Sheets\D876R99-sht-key_map.dgn

QUIGG ENGINEERING INC

USER NAME = toverton	DESIGNED - RG	REVISED -	
	DRAWN - RG	REVISED -	
PLOT SCALE = 0.16666633 ' / In.	CHECKED - SMK	REVISED -	
PLOT DATE = 9/20/2024	DATE -	REVISED -	

STATE OF ILLINOIS
DEPARTMENT OF TRANSPORTATION

PLAN KEY MAP
I-64

SCALE: 1" = 800' | SHEET 1 OF 1 SHEETS | STA. 336+00.00 | TO STA. 743+50.00

F.A.I RTE.	SECTION	COUNTY	TOTAL SHEETS	SHEET NO.
64	82-(4,5,6,7)-1R-2	ST. CLAIR	388	39
		CONTRACT NO. 76R99		
	ILLINOIS	FED. AID PROJECT		

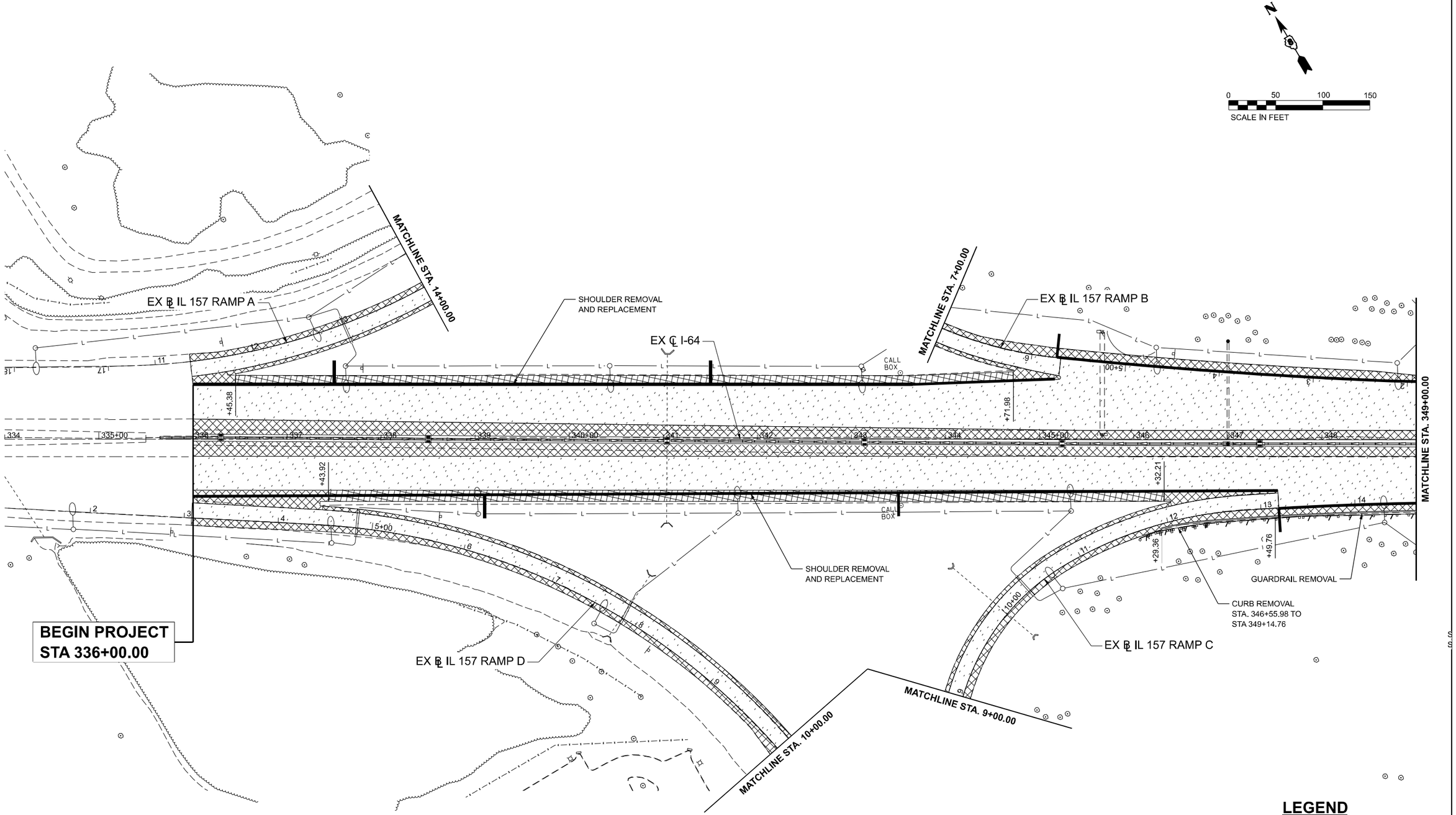

LEGEND

- ROADWAY - HOT-MIX ASPHALT SURFACE REMOVAL, 5"
- SHOULDER - HOT-MIX ASPHALT SURFACE REMOVAL, 5"
- PAVED SHOULDER REMOVAL
- LINEAR REMOVAL

MODEL: I64_CL-1 [Sheet]
FILE NAME: S:\2021\21L007 - PTB 199-30 D8 - Willett Hofmann - Various Ph I-IIWO 4 I-64 Resurfacing\CADD\CADD Sheets\D876R99-sht-removal.dgn

QUIGG ENGINEERING INC

USER NAME = toverton	DESIGNED - RG	REVISED -	
	DRAWN - RG	REVISED -	
PLOT SCALE = 0.16666633 ' / in.	CHECKED - SMK	REVISED -	
PLOT DATE = 11/26/2024	DATE - 12/02/2024	REVISED -	

STATE OF ILLINOIS
DEPARTMENT OF TRANSPORTATION

REMOVAL PLANS
I-64

SCALE: 1"=50' | SHEET 1 OF 31 SHEETS | STA. 334+00.00 | TO STA. 349+00.00

F.A.I RTE.	SECTION	COUNTY	TOTAL SHEETS	SHEET NO.
64	82-(4,5,6,7)-1RS-2	ST. CLAIR	388	40
		CONTRACT NO. 76R99		
	ILLINOIS FED. AID PROJECT			

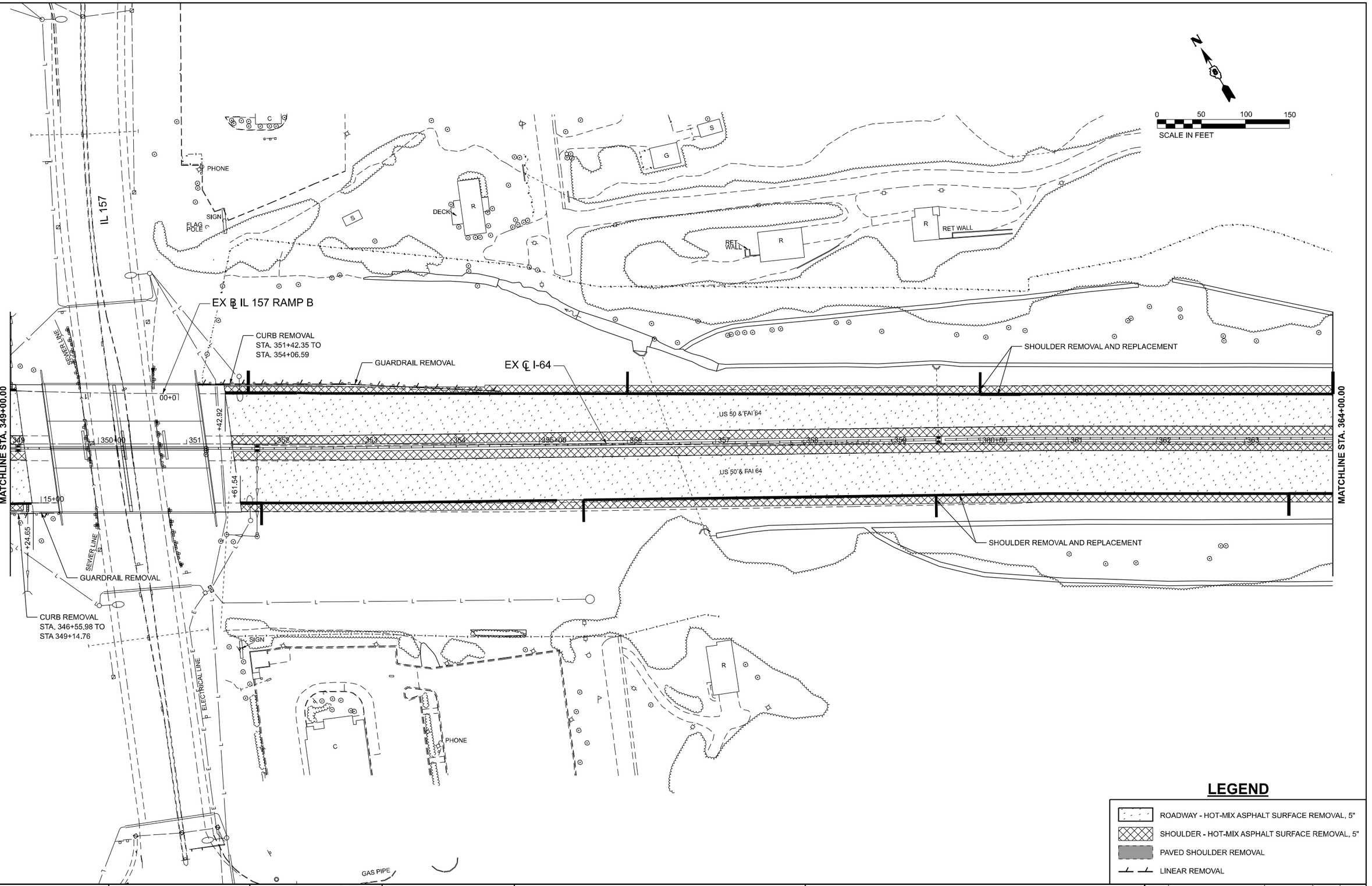

LEGEND

- ROADWAY - HOT-MIX ASPHALT SURFACE REMOVAL, 5"
- SHOULDER - HOT-MIX ASPHALT SURFACE REMOVAL, 5"
- PAVED SHOULDER REMOVAL
- LINEAR REMOVAL

MODEL: I64_CL-2 [Sheet]
FILE NAME: S:\2021\21IL007 - PTB 189-30 D8 - Willett Hofmann - Various Ph I-IIWO 4 I-64 Resurfacing\CADD\CADD Sheets\D876R99-sht-removal.dgn

QUIGG ENGINEERING INC

USER NAME = toverton	DESIGNED - RG	REVISED -	
	DRAWN - RG	REVISED -	
PLOT SCALE = 0.16666633 ' / In.	CHECKED - SMK	REVISED -	
PLOT DATE = 11/22/2024	DATE - 12/02/2024	REVISED -	

STATE OF ILLINOIS
DEPARTMENT OF TRANSPORTATION

REMOVAL PLANS
I-64

SCALE: 1"=50' | SHEET 2 OF 31 SHEETS | STA. 349+00.00 | TO STA. 364+00.00

F.A.I RTE.	SECTION	COUNTY	TOTAL SHEETS	SHEET NO.
64	82-(4,5,6,7)-1RS-2	ST. CLAIR	388	41
		CONTRACT NO. 76R99		
	ILLINOIS FED. AID PROJECT			

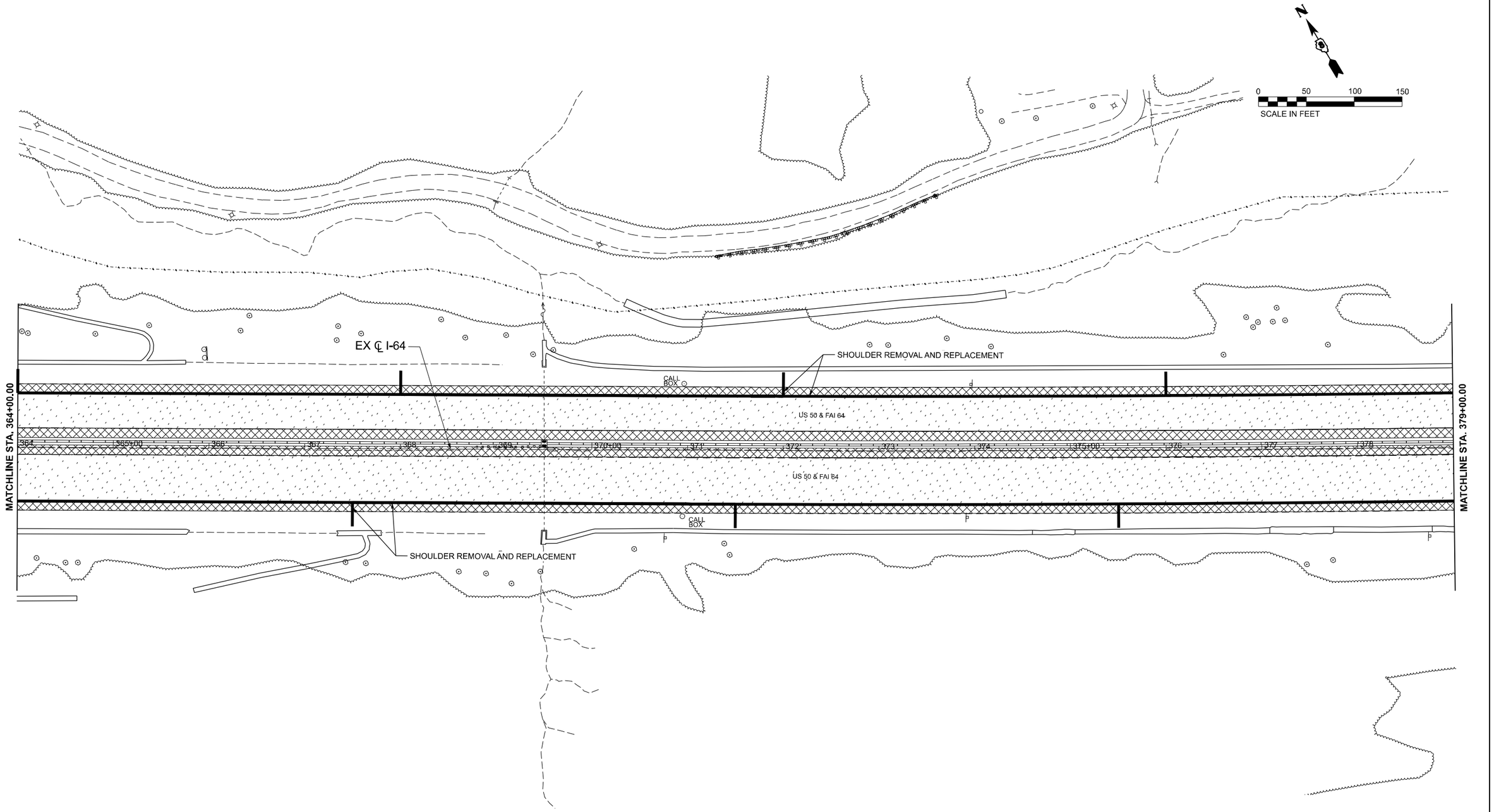

LEGEND

- ROADWAY - HOT-MIX ASPHALT SURFACE REMOVAL, 5"
- SHOULDER - HOT-MIX ASPHALT SURFACE REMOVAL, 5"
- PAVED SHOULDER REMOVAL
- LINEAR REMOVAL

MODEL: I64_CL-3 [Sheet]
FILE NAME: S:\2021\21IL007 - PTB 199-30 D8 - Willett Hofmann - Various Ph II\IWO 4 I-64 Resurfacing\CADD\CADD Sheets\D876R99-sht-removal.dgn

QUIGG ENGINEERING INC

USER NAME = toverton	DESIGNED - RG	REVISED -	
	DRAWN - RG	REVISED -	
PLOT SCALE = 0.16666633 ' / in.	CHECKED - SMK	REVISED -	
PLOT DATE = 11/22/2024	DATE - 12/02/2024	REVISED -	

STATE OF ILLINOIS
DEPARTMENT OF TRANSPORTATION

REMOVAL PLANS
I-64

SCALE: 1"=50' | SHEET 3 OF 31 SHEETS | STA. 364+00.00 | TO STA. 379+00.00

F.A.I RTE.	SECTION	COUNTY	TOTAL SHEETS	SHEET NO.
64	82-(4,5,6,7)-1RS-2	ST. CLAIR	388	42
		CONTRACT NO. 76R99		
	ILLINOIS FED. AID PROJECT			

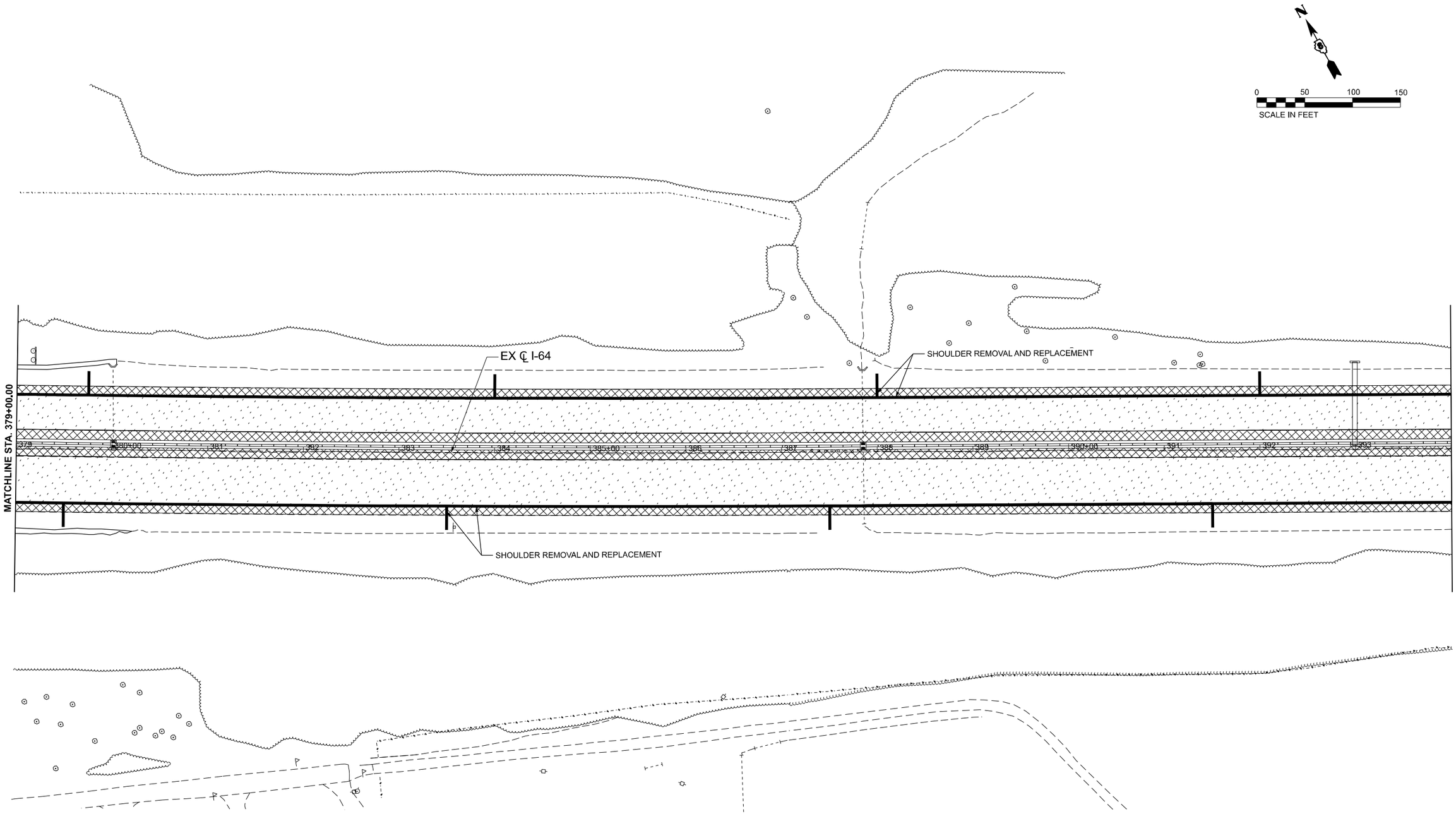

LEGEND

- ROADWAY - HOT-MIX ASPHALT SURFACE REMOVAL, 5"
- SHOULDER - HOT-MIX ASPHALT SURFACE REMOVAL, 5"
- PAVED SHOULDER REMOVAL
- LINEAR REMOVAL

MODEL: I64_CL-4 [Sheet]
FILE NAME: S:\2021\21IL007 - PTB 199-30 D8 - Willett Hofmann - Various Ph II\WO 4 I-64 Resurfacing\CADD\CADD Sheets\D876R99-sht-removal.dgn

QUIGG ENGINEERING INC

USER NAME = toverton	DESIGNED - RG	REVISED -		
	DRAWN - RG	REVISED -		
PLOT SCALE = 0.16666633 ' / in.	CHECKED - SMK	REVISED -		
PLOT DATE = 11/22/2024	DATE - 12/02/2024	REVISED -		

STATE OF ILLINOIS
DEPARTMENT OF TRANSPORTATION

REMOVAL PLANS
I-64

SCALE: 1"=50' | SHEET 4 OF 31 SHEETS | STA. 379+00.00 | TO STA. 394+00.00

F.A.I RTE.	SECTION	COUNTY	TOTAL SHEETS	SHEET NO.
64	82-(4,5,6,7)-1RS-2	ST. CLAIR	388	43
		CONTRACT NO. 76R99		
		ILLINOIS	FED. AID PROJECT	

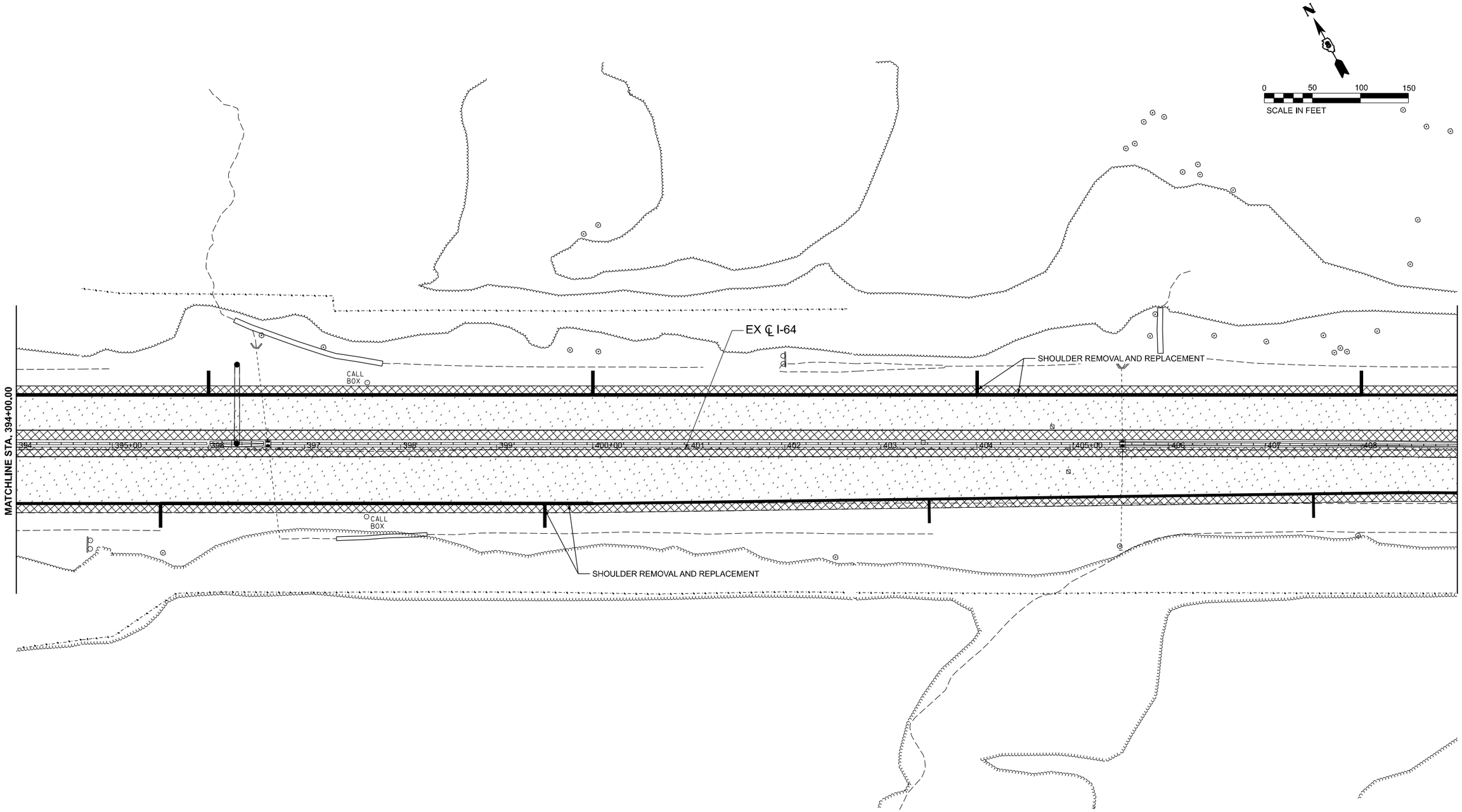

LEGEND

- ROADWAY - HOT-MIX ASPHALT SURFACE REMOVAL, 5"
- SHOULDER - HOT-MIX ASPHALT SURFACE REMOVAL, 5"
- PAVED SHOULDER REMOVAL
- LINEAR REMOVAL

MODEL: I64_CL-5 [Sheet]
FILE NAME: S:\2021\21L007 - PTB 199-30 D8 - Willett Hofmann - Various Ph I\IWO 4 I-64 Resurfacing\CADD\CADD Sheets\D876R99-sht-removal.dgn

QUIGG ENGINEERING INC

USER NAME = toverton	DESIGNED - RG	REVISED -
	DRAWN - RG	REVISED -
PLOT SCALE = 0.16666633 ' / in.	CHECKED - SMK	REVISED -
PLOT DATE = 11/22/2024	DATE - 12/02/2024	REVISED -

STATE OF ILLINOIS
DEPARTMENT OF TRANSPORTATION

REMOVAL PLANS
I-64

SCALE: 1"=50' | SHEET 5 OF 31 SHEETS | STA. 394+00.00 | TO STA. 409+00.00

F.A.I RTE.	SECTION	COUNTY	TOTAL SHEETS	SHEET NO.
64	82-(4,5,6,7)-1RS-2	ST. CLAIR	388	44
		CONTRACT NO. 76R99		
		ILLINOIS FED. AID PROJECT		

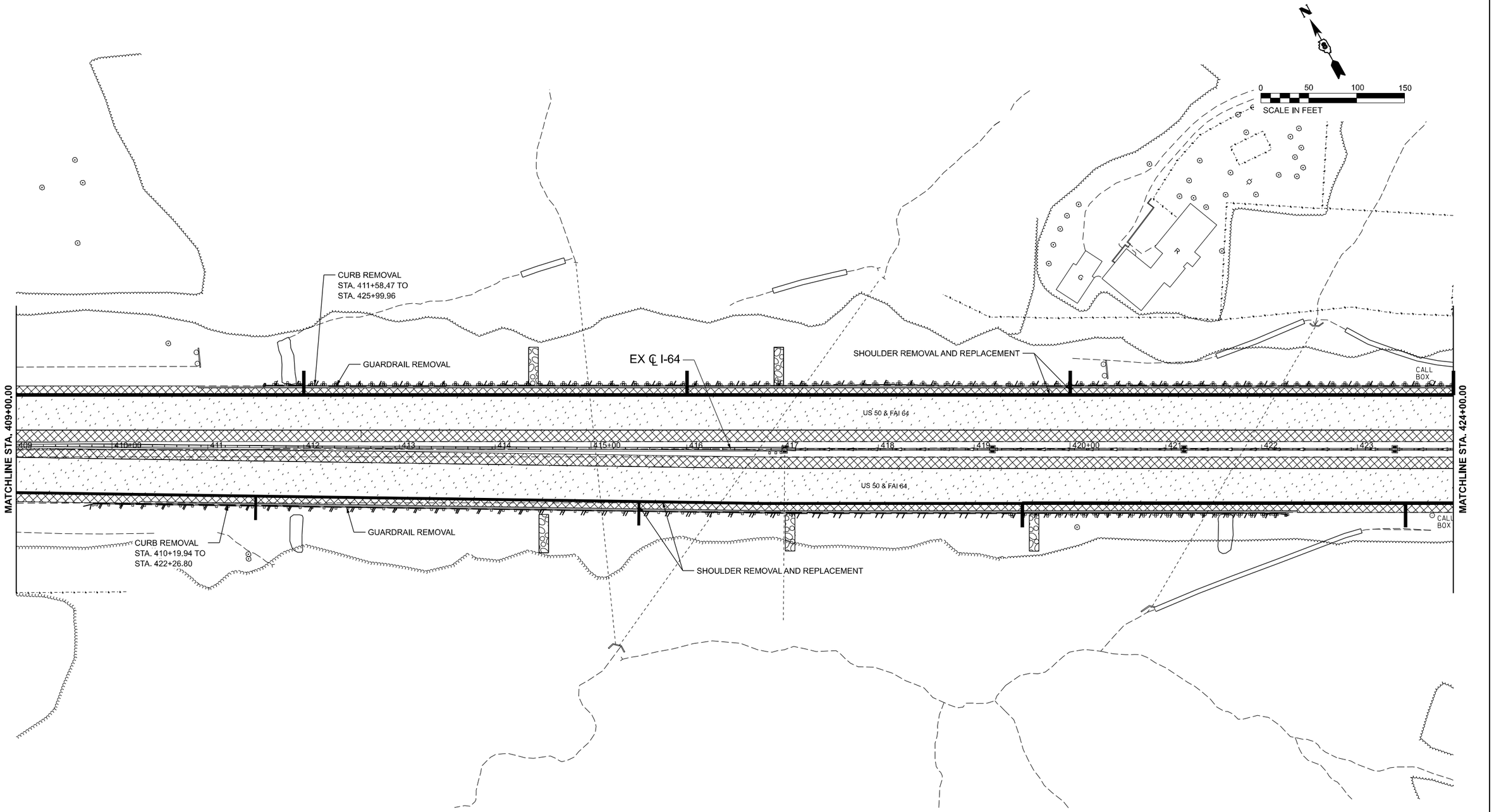

LEGEND

- ROADWAY - HOT-MIX ASPHALT SURFACE REMOVAL, 5"
- SHOULDER - HOT-MIX ASPHALT SURFACE REMOVAL, 5"
- PAVED SHOULDER REMOVAL
- LINEAR REMOVAL

MODEL: I64_CL-6 [Sheet]
FILE NAME: S:\2021\21L007 - PTB 199-30 D8 - Willett Hofmann - Various Ph I\IWO 4 I-64 Resurfacing\CADD\CADD Sheets\D876R99-sht-removal.dgn

QUIGG ENGINEERING INC

USER NAME = toverton		DESIGNED -	RG	REVISED -	
		DRAWN -	RG	REVISED -	
PLOT SCALE = 0.16666633 ' / in.		CHECKED -	SMK	REVISED -	
PLOT DATE = 11/26/2024		DATE -	12/02/2024	REVISED -	

STATE OF ILLINOIS
DEPARTMENT OF TRANSPORTATION

REMOVAL PLANS
I-64

SCALE: 1"=50' | SHEET 6 OF 31 SHEETS | STA. 409+00.00 | TO STA. 424+00.00

F.A.I RTE.	SECTION	COUNTY	TOTAL SHEETS	SHEET NO.
64	82-(4,5,6,7)-1RS-2	ST. CLAIR	388	45
		CONTRACT NO. 76R99		
	ILLINOIS FED. AID PROJECT			

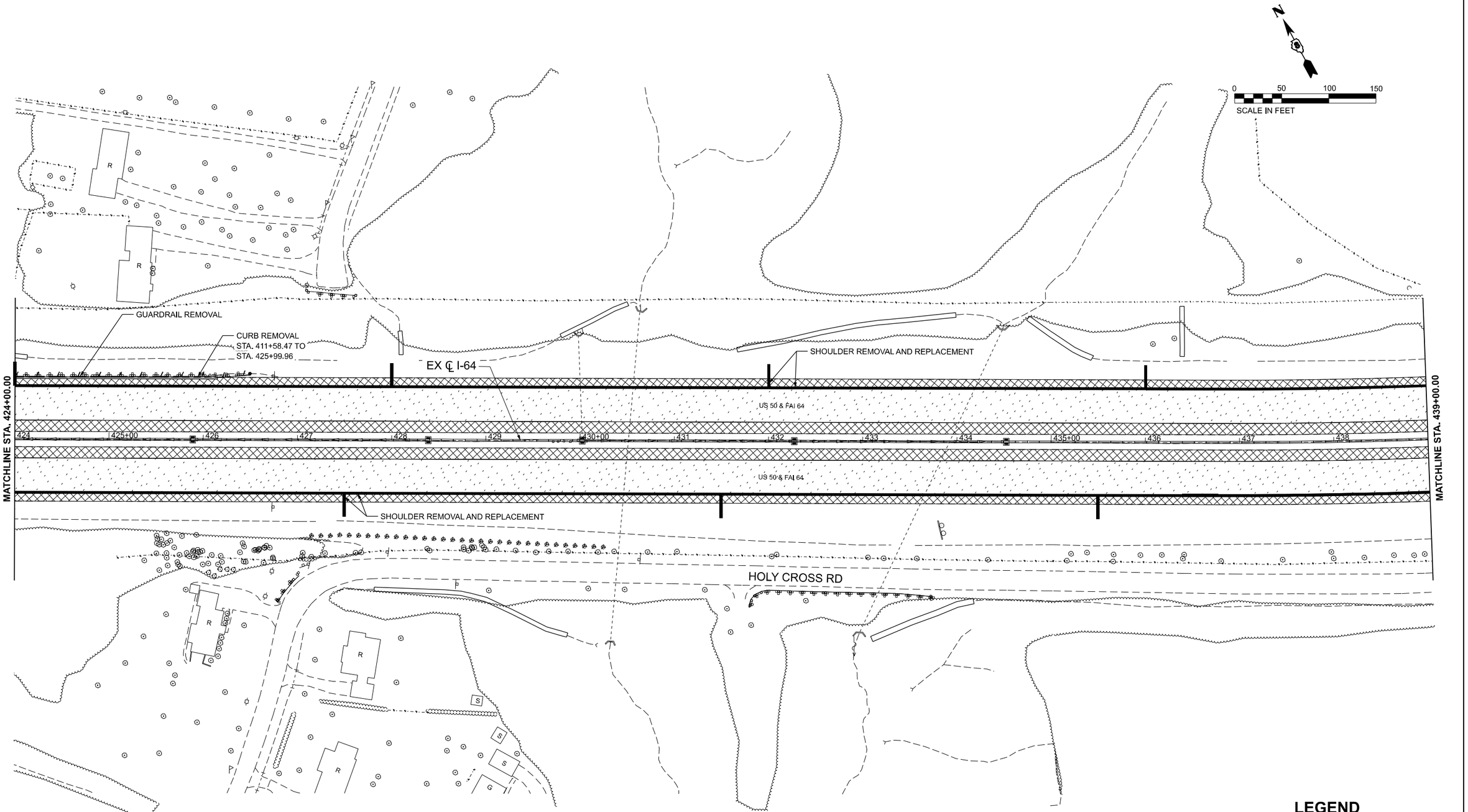

LEGEND

- ROADWAY - HOT-MIX ASPHALT SURFACE REMOVAL, 5"
- SHOULDER - HOT-MIX ASPHALT SURFACE REMOVAL, 5"
- PAVED SHOULDER REMOVAL
- LINEAR REMOVAL

MODEL: I64_CL-7 [Sheet]
FILE NAME: S:\2021\21IL007 - PTB 199-30 D8 - Willett Hofmann - Various Ph I-IIWO 4 I-64 Resurfacing\CADD\CADD Sheets\D876R99-sht-removal.dgn

QUIGG ENGINEERING INC

USER NAME = rgoertz	DESIGNED - RG	REVISED -	
	DRAWN - RG	REVISED -	
PLOT SCALE = 0.16666633 ' / in.	CHECKED - SMK	REVISED -	
PLOT DATE = 12/1/2024	DATE - 12/02/2024	REVISED -	

STATE OF ILLINOIS
DEPARTMENT OF TRANSPORTATION

REMOVAL PLANS
I-64

SCALE: 1"=50' | SHEET 7 OF 31 SHEETS | STA. 424+00.00 | TO STA. 439+00.00

F.A.I RTE.	SECTION	COUNTY	TOTAL SHEETS	SHEET NO.
64	82-(4,5,6,7)-1RS-2	ST. CLAIR	388	46
		CONTRACT NO. 76R99		
	ILLINOIS FED. AID PROJECT			

N

0 50 100 150

SCALE IN FEET

BUNKUM RD

(GAS)

MATCHLINE STA. 439+00.00

MATCHLINE STA. 454+00.00

EX ℄ I-64

SHOULDER REMOVAL AND REPLACEMENT

SHOULDER REMOVAL AND REPLACEMENT

CALL BOX

CALL BOX

439 440+00 441 442 443 444 445+00 446 447 448 449 450+00 451 452 453

HOLY CROSS RD

GP

LEGEND

- ROADWAY - HOT-MIX ASPHALT SURFACE REMOVAL, 5"
- SHOULDER - HOT-MIX ASPHALT SURFACE REMOVAL, 5"
- PAVED SHOULDER REMOVAL
- LINEAR REMOVAL

MODEL: I64_CL-8 [Sheet]
FILE NAME: S:\2021\21L007 - PTB 199-30 D8 - Willett Hofmann - Various Ph II\WO 4 I-64 Resurfacing\CADD\CADD Sheets\D876R99-slh-removal.dgn

QUIGG ENGINEERING INC

USER NAME = toverton	DESIGNED - RG	REVISED -	
	DRAWN - RG	REVISED -	
PLOT SCALE = 0.16666633 ' / In.	CHECKED - SMK	REVISED -	
PLOT DATE = 11/22/2024	DATE - 12/02/2024	REVISED -	

STATE OF ILLINOIS
DEPARTMENT OF TRANSPORTATION

REMOVAL PLANS
I-64

SCALE: 1"=50' | SHEET 8 OF 31 SHEETS | STA. 439+00.00 | TO STA. 454+00.00

F.A.I RTE.	SECTION	COUNTY	TOTAL SHEETS	SHEET NO.
64	82-(4,5,6,7)-1RS-2	ST. CLAIR	388	47
		CONTRACT NO. 76R99		
	ILLINOIS FED. AID PROJECT			

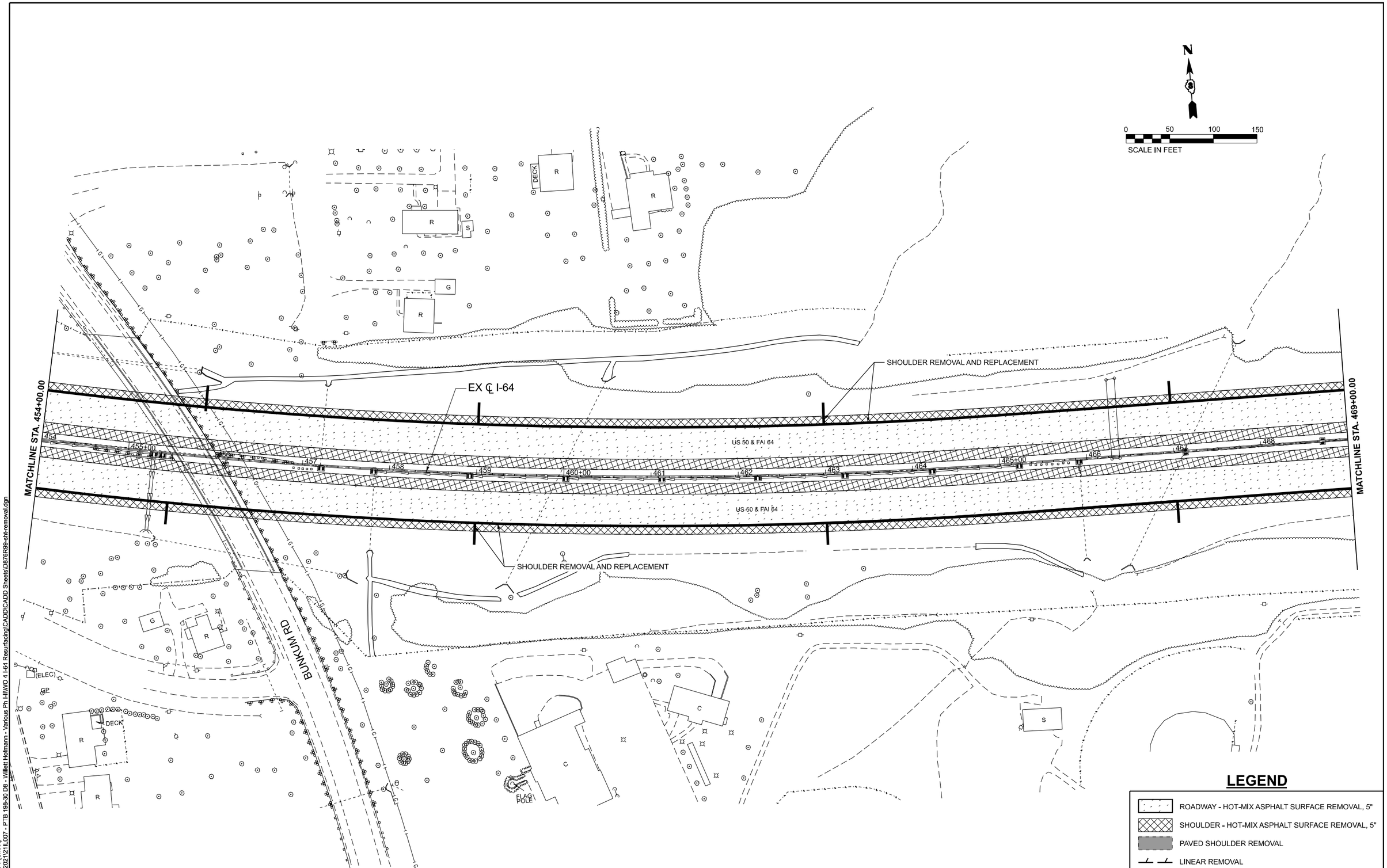

MODEL: I64_CL-9 [Sheet]
FILE NAME: S:\2021\21IL007 - PTB 198-30 D8 - Willett Hofmann - Various Ph I-II\WO 4 I-64 Resurfacing\CADD\CADD Sheets\D876R99-sht-removal.dgn

QUIGG ENGINEERING INC

USER NAME = toverton	DESIGNED - RG	REVISED -	
	DRAWN - RG	REVISED -	
PLOT SCALE = 0.16666633 ' / In.	CHECKED - SMK	REVISED -	
PLOT DATE = 11/22/2024	DATE - 12/02/2024	REVISED -	

STATE OF ILLINOIS
DEPARTMENT OF TRANSPORTATION

REMOVAL PLANS
I-64

SCALE: 1"=50' | SHEET 9 OF 31 SHEETS | STA. 454+00.00 TO STA. 469+00.00

F.A.I RTE.	SECTION	COUNTY	TOTAL SHEETS	SHEET NO.
64	82-(4,5,6,7)-1RS-2	ST. CLAIR	388	48
		CONTRACT NO. 76R99		
		ILLINOIS	FED. AID PROJECT	

N

0 50 100 150
SCALE IN FEET

EX ℄ I-64

CURB REMOVAL
STA. 474+35.76 TO
STA. 478+72.53

GUARDRAIL REMOVAL

SHOULDER REMOVAL AND REPLACEMENT

CALL BOX

US 50 & FAI 64

469 470+00 471 472 473 474 475+00 476 477 478 479 480+00 481 482 483

MATCHLINE STA. 469+00.00

MATCHLINE STA. 484+00.00

US 50 & FAI 64

CALL BOX

SHOULDER REMOVAL AND REPLACEMENT

GUARDRAIL REMOVAL

CURB REMOVAL
STA. 473+38.72 TO
STA. 477+60.05

CURB REMOVAL
STA. 482+22.56 TO
STA. 490+27.70

GUARDRAIL REMOVAL

DECK
R
S
POOL
B

LEGEND

- ROADWAY - HOT-MIX ASPHALT SURFACE REMOVAL, 5"
- SHOULDER - HOT-MIX ASPHALT SURFACE REMOVAL, 5"
- PAVED SHOULDER REMOVAL
- LINEAR REMOVAL

MODEL: I64_CL-10 [Sheet]
FILE NAME: S:\2021121IL007 - PTB 189-30 D8 - Willett Hofmann - Various Ph II\IWO 4 I-64 Resurfacing\CADD\CADD Sheets\D8776R99-sht-removal.dgn

QUIGG ENGINEERING INC

USER NAME = toverton		DESIGNED - RG		REVISED -	
		DRAWN - RG		REVISED -	
PLOT SCALE = 0.16666633 ' / In.		CHECKED - SMK		REVISED -	
PLOT DATE = 11/22/2024		DATE - 12/02/2024		REVISED -	

STATE OF ILLINOIS
DEPARTMENT OF TRANSPORTATION

REMOVAL PLANS
I-64

SCALE: 1"=50' | SHEET 10 OF 31 SHEETS | STA. 469+00.00 | TO STA. 484+00.00

F.A.I RTE.	SECTION	COUNTY	TOTAL SHEETS	SHEET NO.
64	82-(4,5,6,7)-1RS-2	ST. CLAIR	388	49
		CONTRACT NO. 76R99		
	ILLINOIS	FED. AID PROJECT		

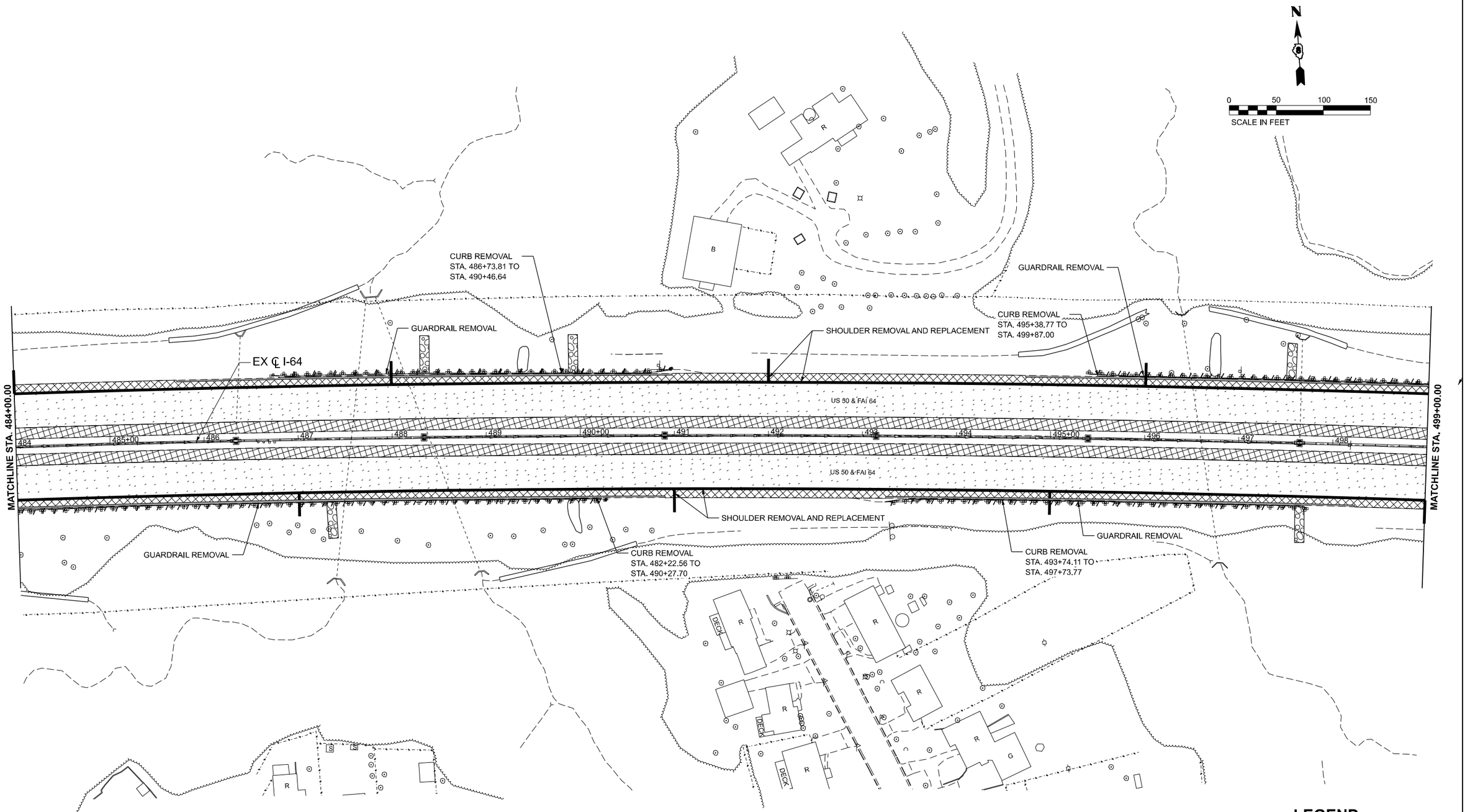

LEGEND

- ROADWAY - HOT-MIX ASPHALT SURFACE REMOVAL, 5"
- SHOULDER - HOT-MIX ASPHALT SURFACE REMOVAL, 5"
- PAVED SHOULDER REMOVAL
- LINEAR REMOVAL

MODEL: I64_CL-11 [Sheet]
FILE NAME: S:\2021\21IL007 - PTB 199-30 D8 - Willett Hofmann - Various Ph I,II,WO 4 I-64 Resurfacing\CADD\CADD Sheets\D876R99-sht-removal.dgn

QUIGG ENGINEERING INC

USER NAME = toverton	DESIGNED - RG	REVISED -	
	DRAWN - RG	REVISED -	
PLOT SCALE = 0.16666633 ' / in.	CHECKED - SMK	REVISED -	
PLOT DATE = 11/22/2024	DATE - 12/02/2024	REVISED -	

STATE OF ILLINOIS
DEPARTMENT OF TRANSPORTATION

REMOVAL PLANS
I-64

SCALE: 1"=50' | SHEET 11 OF 31 SHEETS | STA. 484+00.00 | TO STA. 499+00.00

F.A.I RTE.	SECTION	COUNTY	TOTAL SHEETS	SHEET NO.
64	82-(4,5,6,7)-1RS-2	ST. CLAIR	388	50
		CONTRACT NO. 76R99		
	ILLINOIS FED. AID PROJECT			

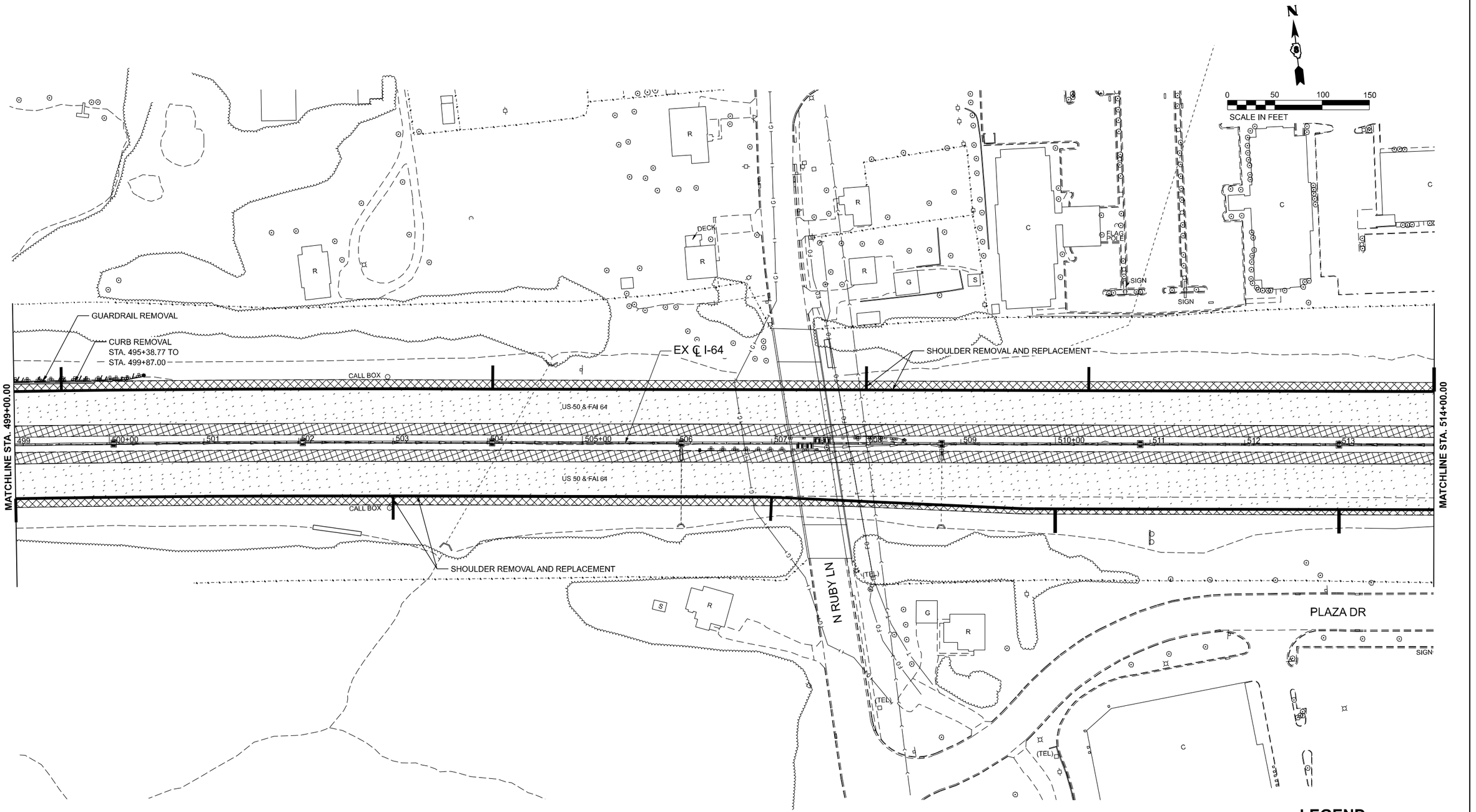

LEGEND

- ROADWAY - HOT-MIX ASPHALT SURFACE REMOVAL, 5"
- SHOULDER - HOT-MIX ASPHALT SURFACE REMOVAL, 5"
- PAVED SHOULDER REMOVAL
- LINEAR REMOVAL

MODEL: I64_CL-12 [Sheet]
FILE NAME: S:\2021\21IL007 - PTB 189-30 D8 - Willett Hofmann - Various Ph III\WO 4 I-64 Resurfacing\CADD\CADD Sheets\D8776R99-sht-removal.dgn

QUIGG ENGINEERING INC

USER NAME = toverton	DESIGNED - RG	REVISED -	
	DRAWN - RG	REVISED -	
PLOT SCALE = 0.16666633 ' / In.	CHECKED - SMK	REVISED -	
PLOT DATE = 11/22/2024	DATE - 12/02/2024	REVISED -	

STATE OF ILLINOIS
DEPARTMENT OF TRANSPORTATION

REMOVAL PLANS
I-64

SCALE: 1"=50' | SHEET 12 OF 31 SHEETS | STA. 499+00.00 | TO STA. 514+00.00

F.A.I RTE.	SECTION	COUNTY	TOTAL SHEETS	SHEET NO.
64	82-(4,5,6,7)-1RS-2	ST. CLAIR	388	51
		CONTRACT NO. 76R99		
	ILLINOIS FED. AID PROJECT			

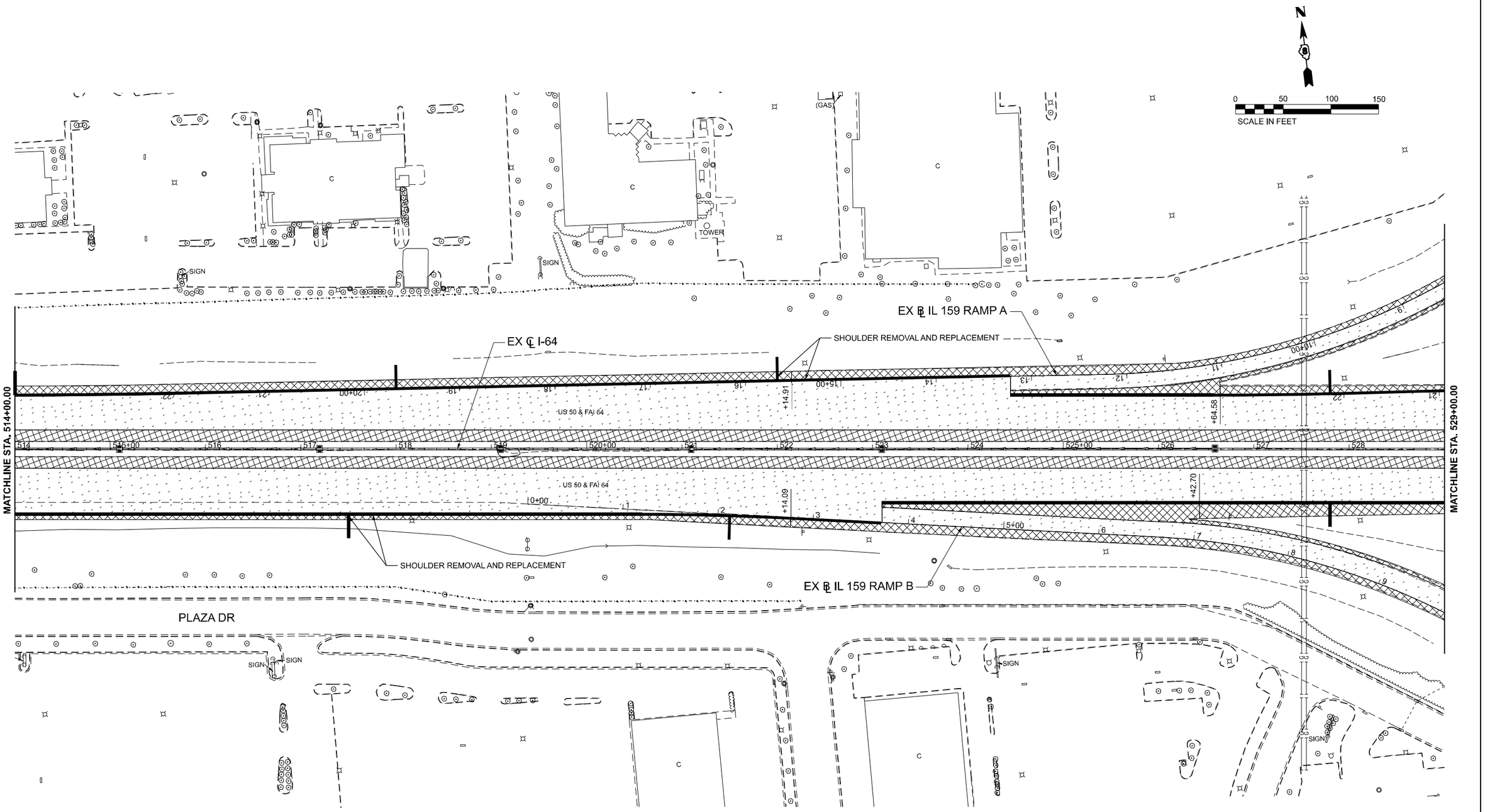

LEGEND

- ROADWAY - HOT-MIX ASPHALT SURFACE REMOVAL, 5"
- SHOULDER - HOT-MIX ASPHALT SURFACE REMOVAL, 5"
- PAVED SHOULDER REMOVAL
- LINEAR REMOVAL

MODEL: I64_CL-13 [Sheet]
FILE NAME: S:\2021\21IL007 - PTB 199-30 D8 - Willett Hofmann - Various Ph II\WO 4 I-64 Resurfacing\CADD\CADD Sheets\D876R99-sht-removal.dgn

QUIGG ENGINEERING INC

USER NAME = toverton	DESIGNED - RG	REVISED -	
	DRAWN - RG	REVISED -	
PLOT SCALE = 0.16666633 ' / in.	CHECKED - SMK	REVISED -	
PLOT DATE = 11/22/2024	DATE - 12/02/2024	REVISED -	

STATE OF ILLINOIS
DEPARTMENT OF TRANSPORTATION

REMOVAL PLANS
I-64

SCALE: 1"=50' | SHEET 13 OF 31 SHEETS | STA. 514+00.00 | TO STA. 529+00.00

F.A.I RTE.	SECTION	COUNTY	TOTAL SHEETS	SHEET NO.
64	82-(4,5,6,7)-1RS-2	ST. CLAIR	388	52
		CONTRACT NO. 76R99		
	ILLINOIS	FED. AID PROJECT		

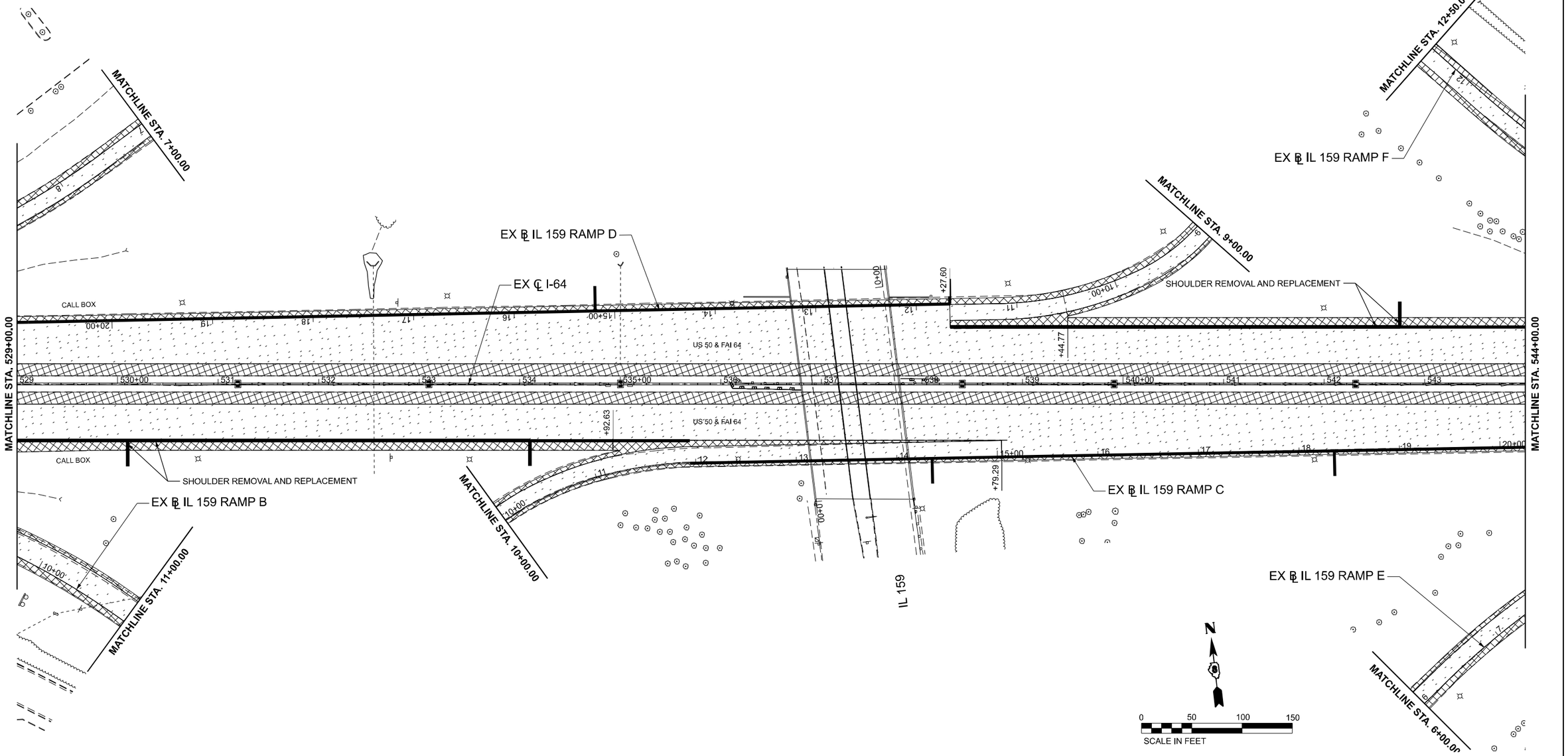

LEGEND

- ROADWAY - HOT-MIX ASPHALT SURFACE REMOVAL, 5"
- SHOULDER - HOT-MIX ASPHALT SURFACE REMOVAL, 5"
- PAVED SHOULDER REMOVAL
- LINEAR REMOVAL

MODEL: I64_CL-14 |Sheet]
FILE NAME: S:\2021\21IL007 - PTB 199-30 D8 - Willett Hofmann - Various Ph I-IIWO 4 I-64 Resurfacing\CADD\CADD Sheets\D876R99-sht-removal.dgn

QUIGG ENGINEERING INC

USER NAME = toverton	DESIGNED - RG	REVISED -	**STATE OF ILLINOIS**	**REMOVAL PLANS**
	DRAWN - RG	REVISED -	**DEPARTMENT OF TRANSPORTATION**	**I-64**
PLOT SCALE = 0.16666633 ' / in.	CHECKED - SMK	REVISED -		
PLOT DATE = 11/26/2024	DATE - 12/02/2024	REVISED -		

SCALE: 1"=50' | SHEET 14 OF 31 SHEETS | STA. 529+00.00 | TO STA. 544+00.00

F.A.I RTE.	SECTION	COUNTY	TOTAL SHEETS	SHEET NO.
64	82-(4,5,6,7)-1RS-2	ST. CLAIR	388	53
		CONTRACT NO. 76R99		
	ILLINOIS	FED. AID PROJECT		

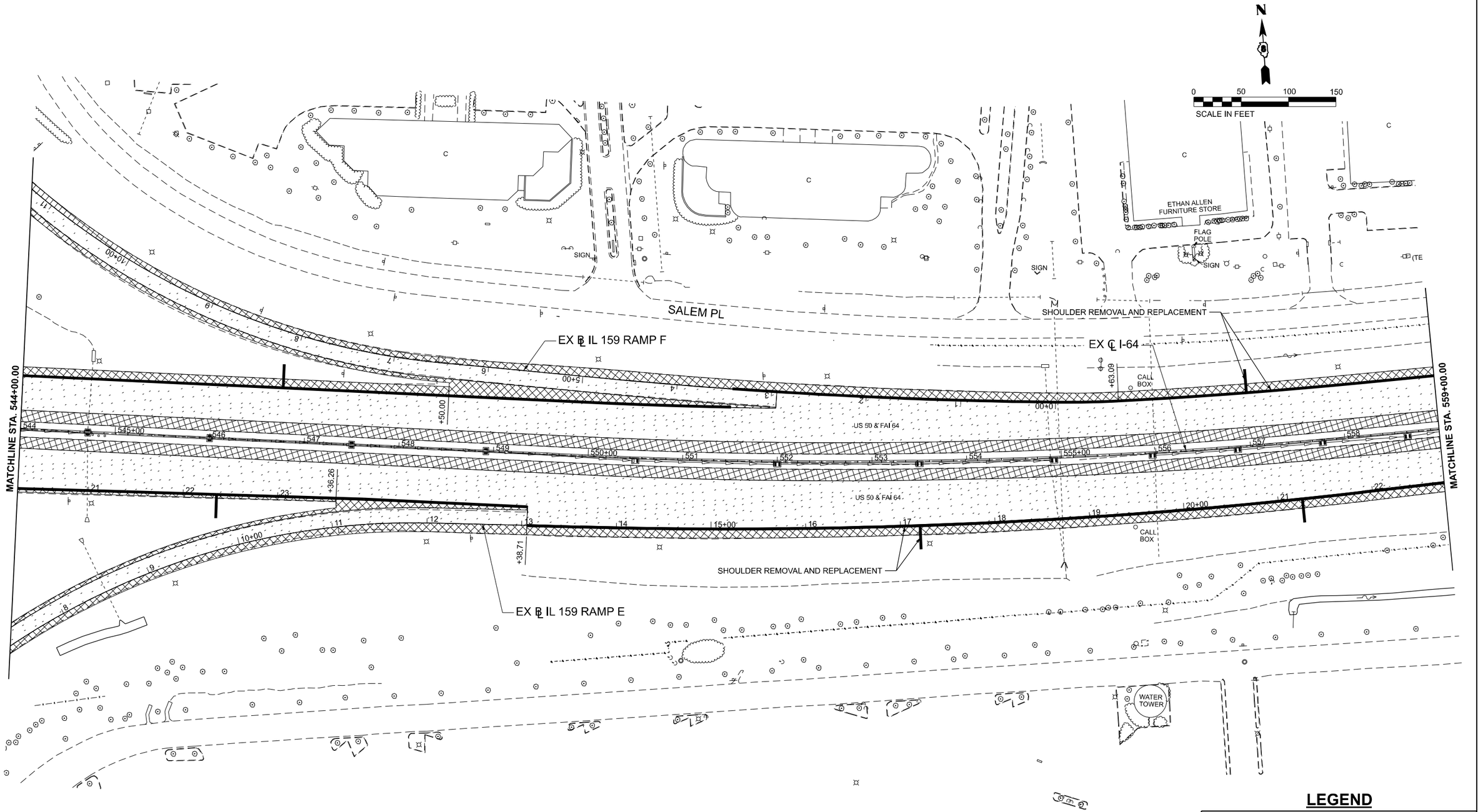

LEGEND

- ROADWAY - HOT-MIX ASPHALT SURFACE REMOVAL, 5"
- SHOULDER - HOT-MIX ASPHALT SURFACE REMOVAL, 5"
- PAVED SHOULDER REMOVAL
- LINEAR REMOVAL

MODEL: I64_CL-15 [Sheet]
FILE NAME: S:\2021\21IL007 - PTB 198-30 D8 - Willett Hofmann - Various Ph II\WO 4 I-64 Resurfacing\CADD\CADD Sheets\D87GR99-sht-removal.dgn

QUIGG ENGINEERING INC

USER NAME = toverton		DESIGNED - RG		REVISED -	
		DRAWN - RG		REVISED -	
PLOT SCALE = 0.16666633 ' / In.		CHECKED - SMK		REVISED -	
PLOT DATE = 11/22/2024		DATE - 12/02/2024		REVISED -	

STATE OF ILLINOIS
DEPARTMENT OF TRANSPORTATION

REMOVAL PLANS
I-64

SCALE: 1"=50' | SHEET 15 OF 31 SHEETS | STA. 544+00.00 | TO STA. 559+00.00

F.A.I RTE.	SECTION	COUNTY	TOTAL SHEETS	SHEET NO.
64	82-(4,5,6,7)-1RS-2	ST. CLAIR	388	54
		CONTRACT NO. 76R99		
	ILLINOIS FED. AID PROJECT			

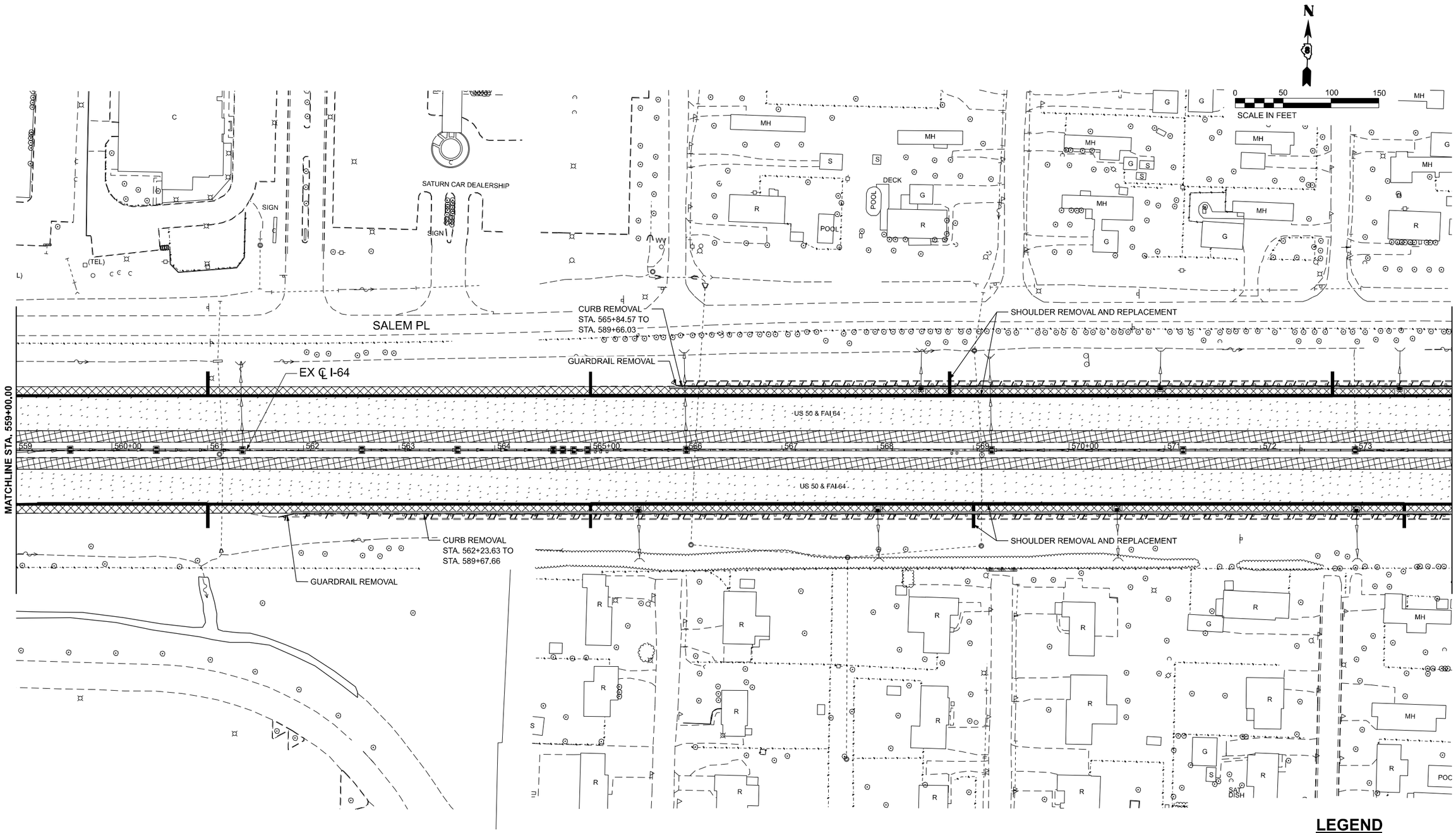

LEGEND

- ROADWAY - HOT-MIX ASPHALT SURFACE REMOVAL, 5"
- SHOULDER - HOT-MIX ASPHALT SURFACE REMOVAL, 5"
- PAVED SHOULDER REMOVAL
- LINEAR REMOVAL

MODEL: I64_CL-16 [Sheet]
FILE NAME: S:\2021\21IL007 - PTB 199-30 D8 - Willett Hofmann - Various Ph I-II\WO 4 I-64 Resurfacing\CADD\CADD Sheets\D876R99-sht-removal.dgn

QUIGG ENGINEERING INC

USER NAME = toverton	DESIGNED - RG	REVISED -	
	DRAWN - RG	REVISED -	
PLOT SCALE = 0.16666633 ' / in.	CHECKED - SMK	REVISED -	
PLOT DATE = 11/22/2024	DATE - 12/02/2024	REVISED -	

STATE OF ILLINOIS
DEPARTMENT OF TRANSPORTATION

REMOVAL PLANS
I-64

SCALE: 1"=50' | SHEET 16 OF 31 SHEETS | STA. 559+00.00 | TO STA. 574+00.00

F.A.I RTE.	SECTION	COUNTY	TOTAL SHEETS	SHEET NO.
64	82-(4,5,6,7)-1RS-2	ST. CLAIR	388	55
		CONTRACT NO. 76R99		
	ILLINOIS	FED. AID PROJECT		

N

0 50 100 150

SCALE IN FEET

SALEM PL

GUARDRAIL REMOVAL

EX ℄ I-64

CURB REMOVAL
STA. 565+84.57 TO
STA. 589+66.03

SHOULDER REMOVAL AND REPLACEMENT

CALL BOX

US 50 & FAI 64

MATCHLINE STA. 574+00.00

574 575+00 576 577 578 579 580+00 581 582 583 584 585+00 586 587 588

MATCHLINE STA. 589+00.00

GUARDRAIL REMOVAL

SHOULDER REMOVAL AND REPLACEMENT

CURB REMOVAL
STA. 562+23.63 TO
STA. 589+67.66

CALL BOX

SAT DISH

POOL

DECK

MH

G

R

S

LEGEND

- ROADWAY - HOT-MIX ASPHALT SURFACE REMOVAL, 5"
- SHOULDER - HOT-MIX ASPHALT SURFACE REMOVAL, 5"
- PAVED SHOULDER REMOVAL
- LINEAR REMOVAL

MODEL: I64_CL-17 [Sheet]
FILE NAME: S:\2021\21L007 - PTB 199-30 D8 - Willett Hofmann - Various Ph II\IWO 4 I-64 Resurfacing\CADD\CADD Sheets\D876R99-slht-removal.dgn

QUIGG ENGINEERING INC

USER NAME = toverton		DESIGNED - RG	REVISED -	
		DRAWN - RG	REVISED -	
PLOT SCALE = 0.16666633 ' / In.		CHECKED - SMK	REVISED -	
PLOT DATE = 11/22/2024		DATE - 12/02/2024	REVISED -	

STATE OF ILLINOIS
DEPARTMENT OF TRANSPORTATION

REMOVAL PLANS
I-64

SCALE: 1"=50' | SHEET 17 OF 31 SHEETS | STA. 574+00.00 | TO STA. 589+00.00

F.A.I RTE.	SECTION	COUNTY	TOTAL SHEETS	SHEET NO.
64	82-(4,5,6,7)-1RS-2	ST. CLAIR	388	56
		CONTRACT NO. 76R99		
	ILLINOIS	FED. AID PROJECT		

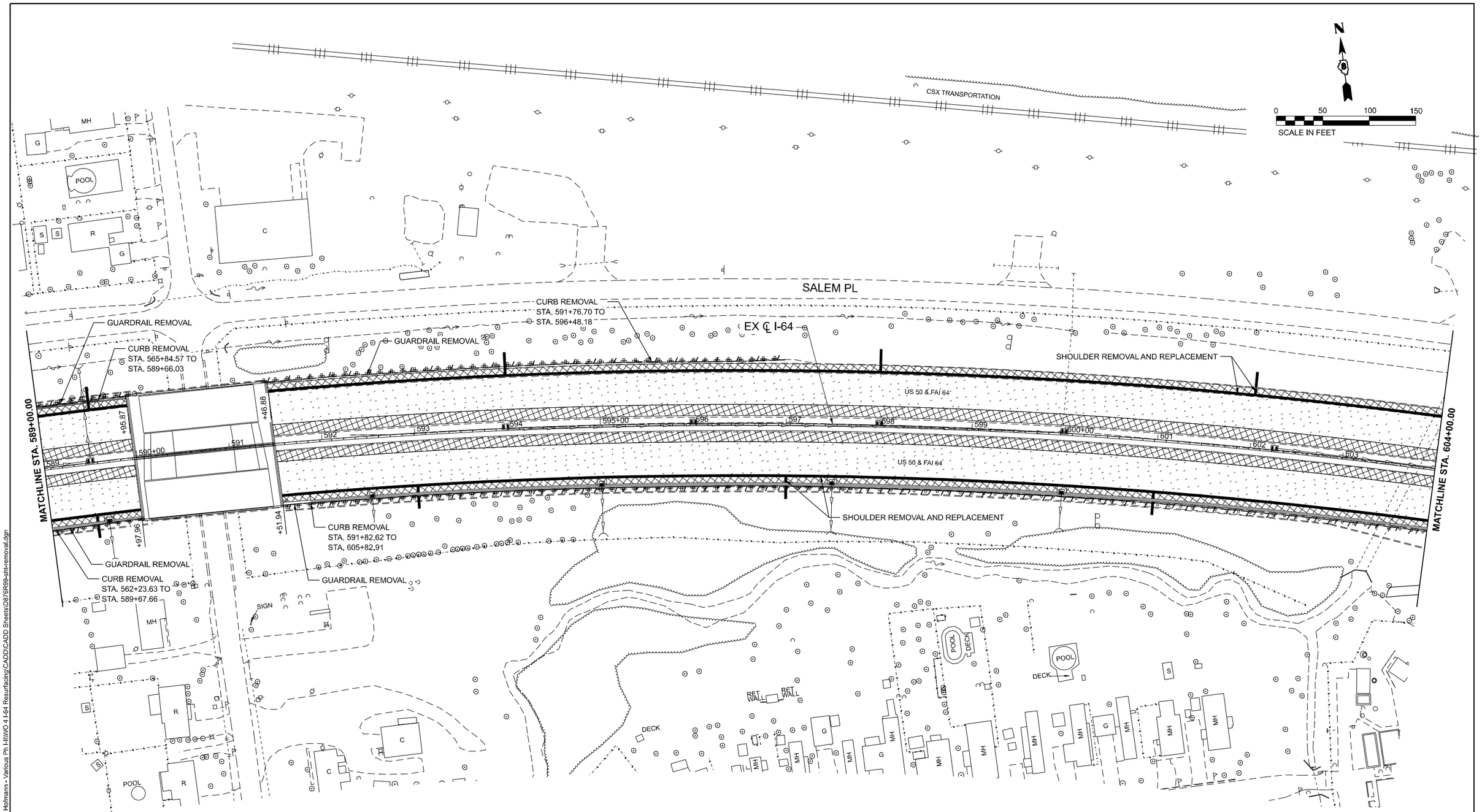

LEGEND

- ROADWAY - HOT-MIX ASPHALT SURFACE REMOVAL, 5"
- SHOULDER - HOT-MIX ASPHALT SURFACE REMOVAL, 5"
- PAVED SHOULDER REMOVAL
- LINEAR REMOVAL

MODEL: I64_CL-18 [Sheet]
FILE NAME: S:\2021\21L007 - PTB 199-30 D8 - Willett Hofmann - Various Ph III\WO 4 I-64 Resurfacing\CADD\CADD Sheets\D876R99-sht-removal.dgn

QUIGG ENGINEERING INC

USER NAME = toverton	DESIGNED - RG	REVISED -	
	DRAWN - RG	REVISED -	
PLOT SCALE = 0.16666633 ' / In.	CHECKED - SMK	REVISED -	
PLOT DATE = 11/27/2024	DATE - 12/02/2024	REVISED -	

STATE OF ILLINOIS
DEPARTMENT OF TRANSPORTATION

REMOVAL PLANS
I-64

SCALE: 1"=50' | SHEET 18 OF 31 SHEETS | STA. 589+00.00 | TO STA. 604+00.00

F.A.I RTE.	SECTION	COUNTY	TOTAL SHEETS	SHEET NO.
64	82-(4,5,6,7)-1RS-2	ST. CLAIR	388	57
		CONTRACT NO. 76R99		
	ILLINOIS	FED. AID PROJECT		

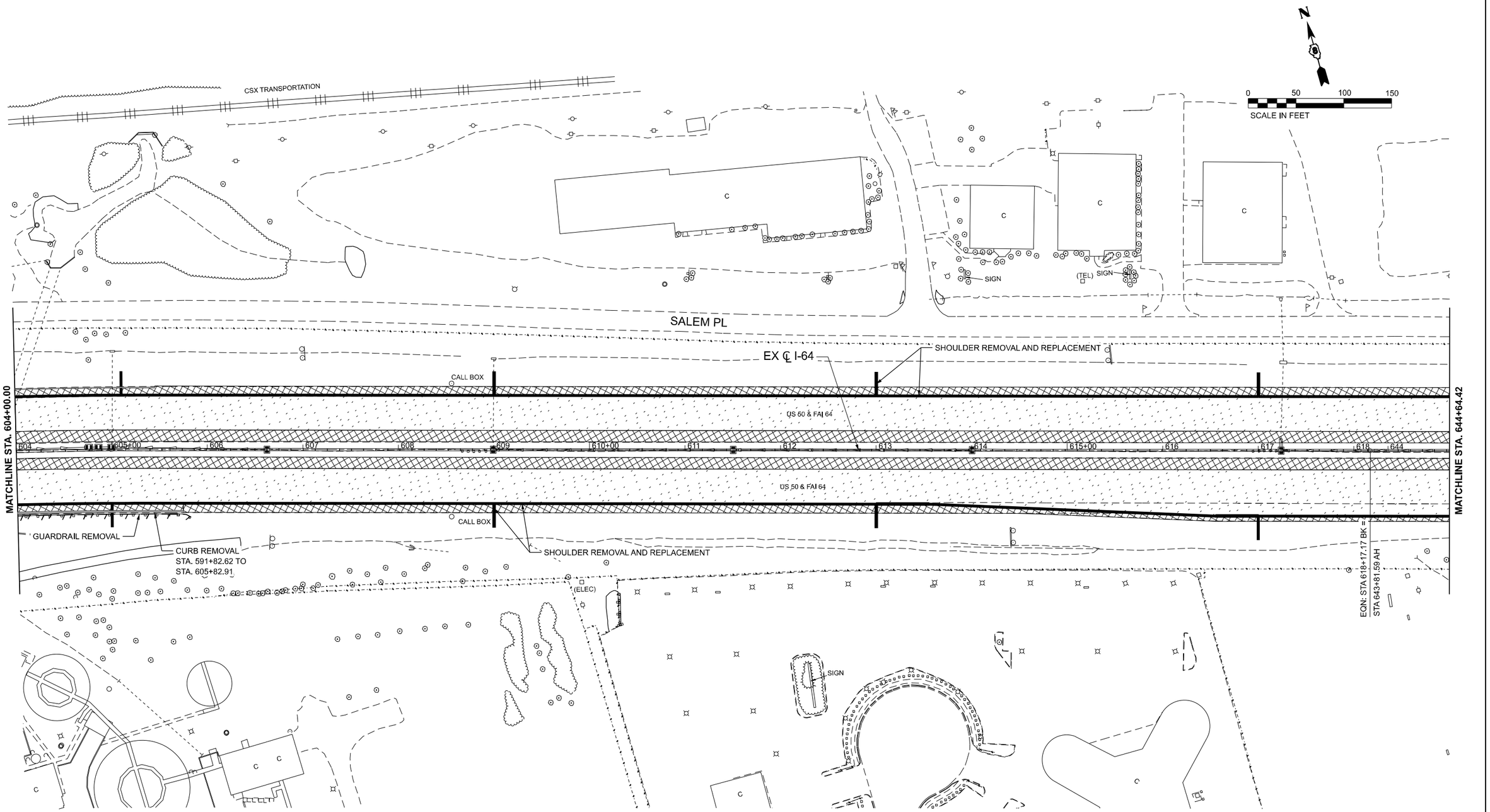

LEGEND

- ROADWAY - HOT-MIX ASPHALT SURFACE REMOVAL, 5"
- SHOULDER - HOT-MIX ASPHALT SURFACE REMOVAL, 5"
- PAVED SHOULDER REMOVAL
- LINEAR REMOVAL

MODEL: I64_CL-19 [Sheet]
FILE NAME: S:\2021\21L007 - PTB 199-30 D8 - Willett Hofmann - Various Ph HIWO 4 I-64 Resurfacing\CADD\CADD Sheets\D876R99-slht-removal.dgn

QUIGG ENGINEERING INC

USER NAME = toverton	DESIGNED - RG	REVISED -	
	DRAWN - RG	REVISED -	
PLOT SCALE = 0.16666633 ' / In.	CHECKED - SMK	REVISED -	
PLOT DATE = 11/22/2024	DATE - 12/02/2024	REVISED -	

STATE OF ILLINOIS
DEPARTMENT OF TRANSPORTATION

REMOVAL PLANS
I-64

SCALE: 1"=50' | SHEET 19 OF 31 SHEETS | STA. 604+00.00 | TO STA. 644+64.42 R2

F.A.I RTE.	SECTION	COUNTY	TOTAL SHEETS	SHEET NO.
64	82-(4,5,6,7)-1RS-2	ST. CLAIR	388	58
		CONTRACT NO. 76R99		
	ILLINOIS	FED. AID PROJECT		

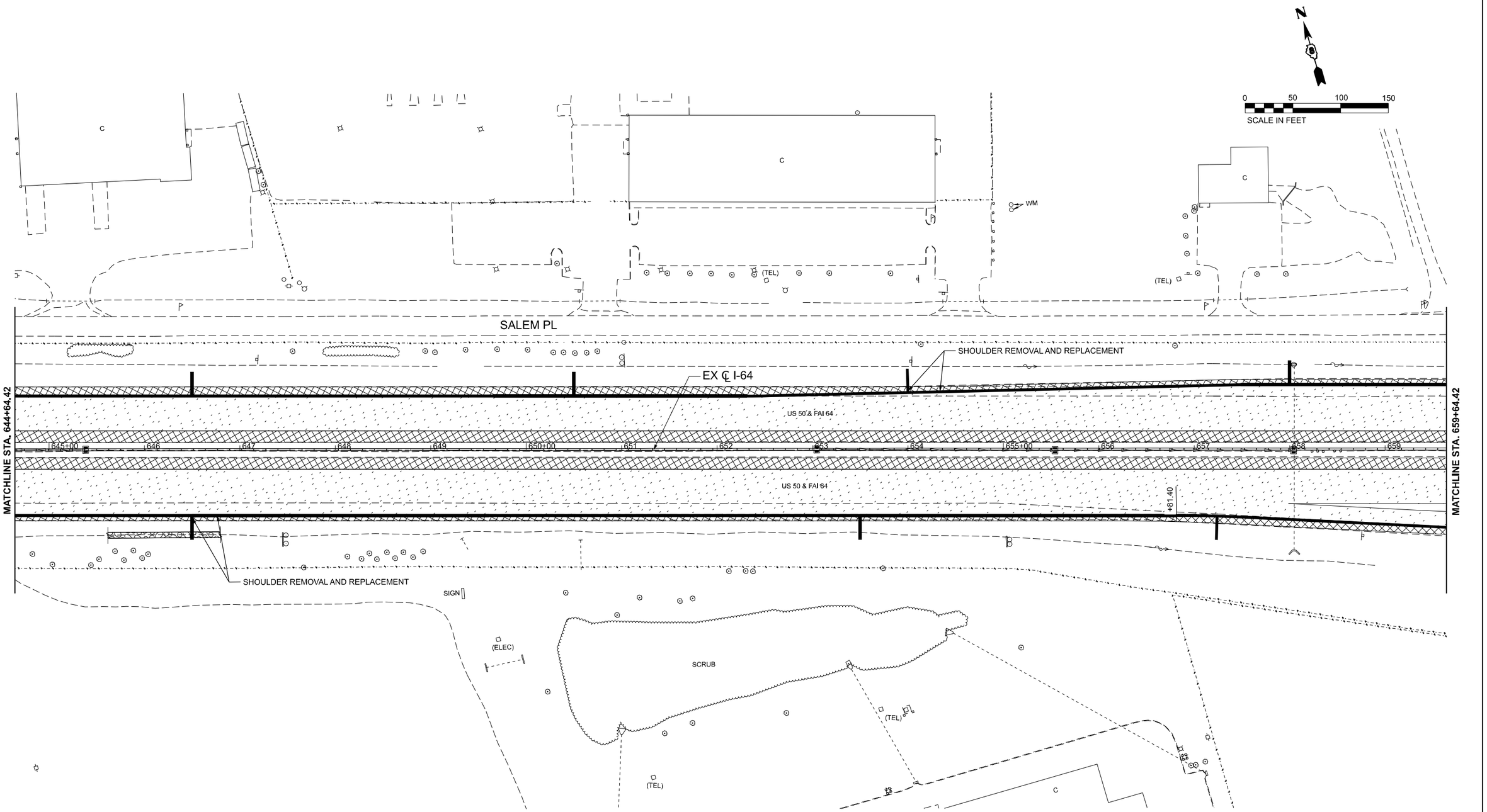

LEGEND

- ROADWAY - HOT-MIX ASPHALT SURFACE REMOVAL, 5"
- SHOULDER - HOT-MIX ASPHALT SURFACE REMOVAL, 5"
- PAVED SHOULDER REMOVAL
- LINEAR REMOVAL

MODEL: [64_CL-20 [Sheet]
FILE NAME: S:\2021\21L007 - PTB 199-30 D8 - Willett Hofmann - Various Ph I-WO 4 I-64 Resurfacing\CADD\CADD Sheets\D876R99-sht-removal.dgn

QUIGG ENGINEERING INC

USER NAME = toverton	DESIGNED - RG	REVISED -	
	DRAWN - RG	REVISED -	
PLOT SCALE = 0.16666633 ' / in.	CHECKED - SMK	REVISED -	
PLOT DATE = 11/22/2024	DATE - 12/02/2024	REVISED -	

STATE OF ILLINOIS
DEPARTMENT OF TRANSPORTATION

REMOVAL PLANS
I-64

SCALE: 1"=50' | SHEET 20 OF 31 SHEETS | STA. 644+64.42 R2 | TO STA. 659+64.42 R2

F.A.I RTE.	SECTION	COUNTY	TOTAL SHEETS	SHEET NO.
64	82-(4,5,6,7)-1RS-2	ST. CLAIR	388	59
		CONTRACT NO. 76R99		
	ILLINOIS FED. AID PROJECT			

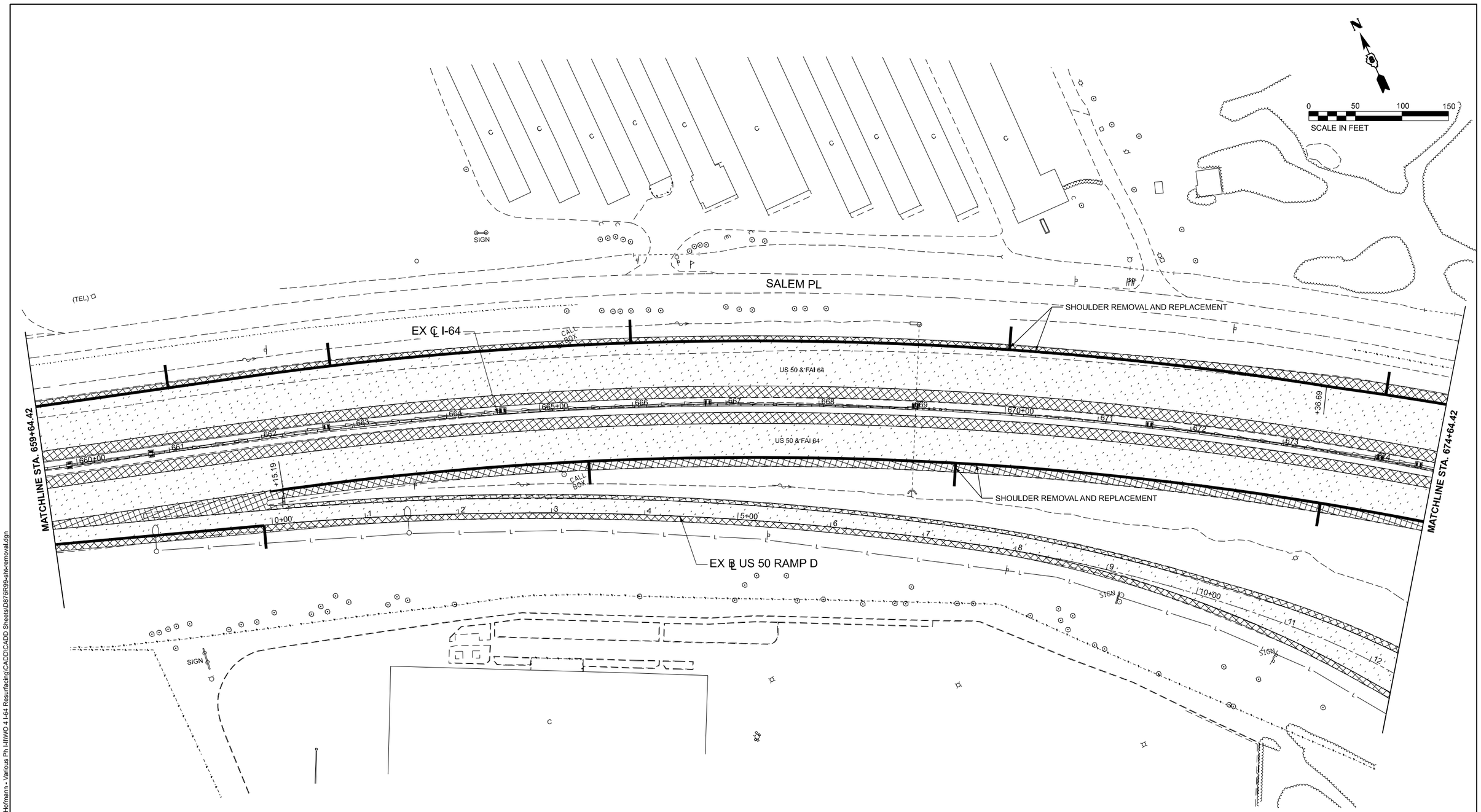

LEGEND

- ROADWAY - HOT-MIX ASPHALT SURFACE REMOVAL, 5"
- SHOULDER - HOT-MIX ASPHALT SURFACE REMOVAL, 5"
- PAVED SHOULDER REMOVAL
- LINEAR REMOVAL

MODEL: I64_CL-21 [Sheet]
FILE NAME: S:\2021\21L007 - PTB 199-30 D8 - Willett Hofmann - Various Ph II\WO 4 I-64 Resurfacing\CADD\CADD Sheets\D876R99-sht-removal.dgn

QUIGG ENGINEERING INC

USER NAME = toverton	DESIGNED - RG	REVISED -	
	DRAWN - RG	REVISED -	
PLOT SCALE = 0.16666633 ' / In.	CHECKED - SMK	REVISED -	
PLOT DATE = 11/22/2024	DATE - 12/02/2024	REVISED -	

STATE OF ILLINOIS
DEPARTMENT OF TRANSPORTATION

REMOVAL PLANS
I-64

SCALE: 1"=50' | SHEET 21 OF 31 SHEETS | STA. 659+64.42 R2 | TO STA. 674+64.42 R2

F.A.I RTE.	SECTION	COUNTY	TOTAL SHEETS	SHEET NO.
64	82-(4,5,6,7)-1RS-2	ST. CLAIR	388	60
		CONTRACT NO. 76R99		
	ILLINOIS	FED. AID PROJECT		

EX ℄ US 50 RAMP C

SCRUB

TREES

SIGN

SIGN

SALEM PL

SHOULDER REMOVAL AND REPLACEMENT

EX ℄ I-64

US 50 & FAI-64

US 50 &-FAI 64

MATCHLINE STA. 674+64.42

MATCHLINE STA. 689+64.42

SHOULDER REMOVAL AND REPLACEMENT

US 50

END IMPROVEMENT
STA 13+45.25

EX ℄ US 50 RAMP D

0 50 100
SCALE IN FEET

LEGEND

- ROADWAY - HOT-MIX ASPHALT SURFACE REMOVAL, 5"
- SHOULDER - HOT-MIX ASPHALT SURFACE REMOVAL, 5"
- PAVED SHOULDER REMOVAL
- LINEAR REMOVAL

MODEL: I64_CL-22 [Sheet]
FILE NAME: S:\2021\21IL007 - PTB 189-30 D8 - Willett Hofmann - Various Ph I-IIWO 4 I-64 Resurfacing\CADD\CADD Sheets\D876R99-sht-removal.dgn

QUIGG ENGINEERING INC

USER NAME = toverton		DESIGNED - RG		REVISED -	
		DRAWN - RG		REVISED -	
PLOT SCALE = 0.16666633 ' / in.		CHECKED - SMK		REVISED -	
PLOT DATE = 11/22/2024		DATE - 12/02/2024		REVISED -	

STATE OF ILLINOIS
DEPARTMENT OF TRANSPORTATION

REMOVAL PLANS
I-64

SCALE: 1"=50' | SHEET 22 OF 31 SHEETS | STA. 674+64.42 R2 | TO STA. 689+64.42 R2

F.A.I RTE.	SECTION	COUNTY	TOTAL SHEETS	SHEET NO.
64	82-(4,5,6,7)-1RS-2	ST. CLAIR	388	61
		CONTRACT NO. 76R99		
	ILLINOIS FED. AID PROJECT			

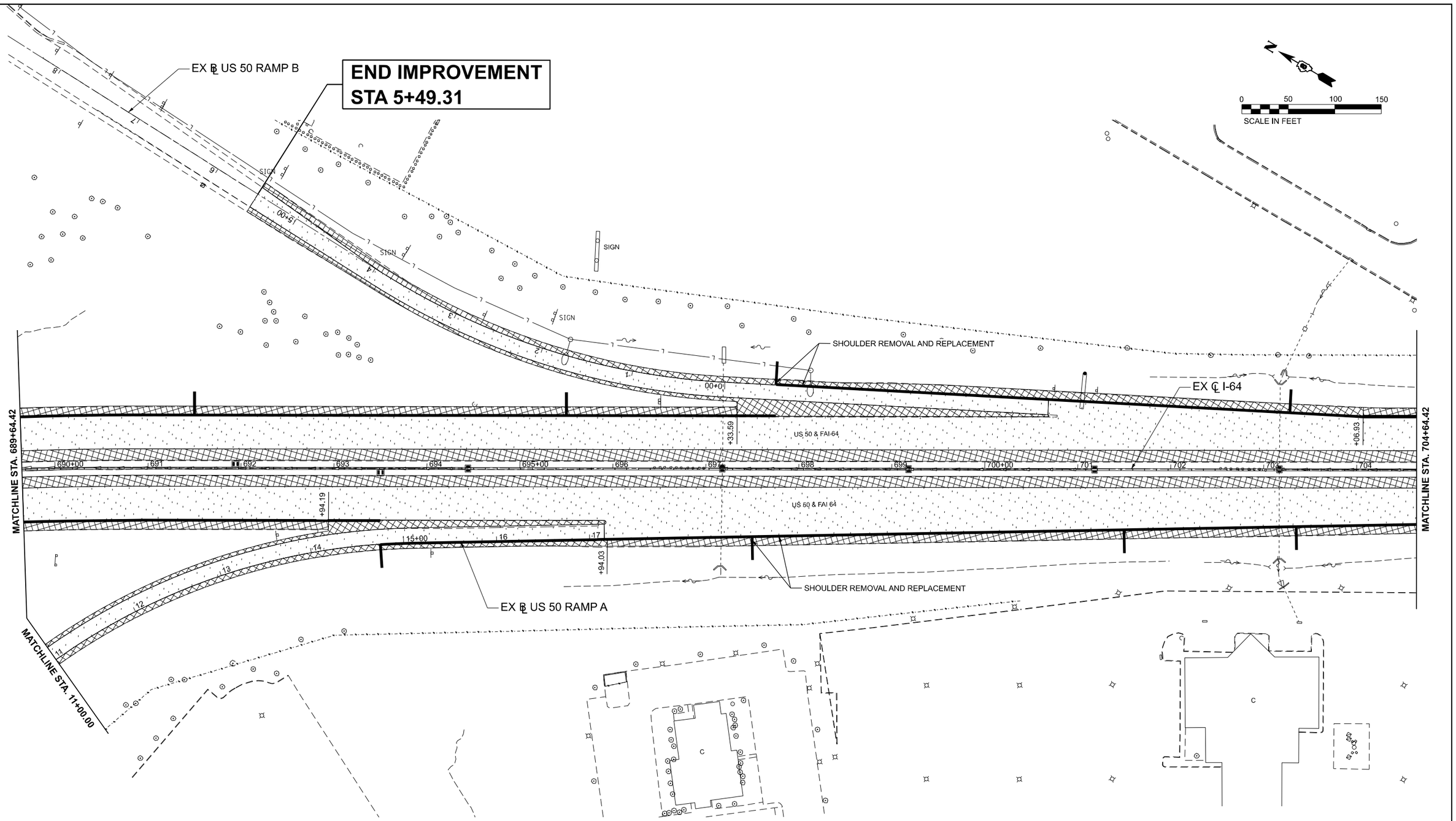

LEGEND

- ROADWAY - HOT-MIX ASPHALT SURFACE REMOVAL, 5"
- SHOULDER - HOT-MIX ASPHALT SURFACE REMOVAL, 5"
- PAVED SHOULDER REMOVAL
- LINEAR REMOVAL

MODEL: I64_CL-23 [Sheet]
FILE NAME: S:\2024\21L007 - PTB 199-30 D8 - Willett Hofmann - Various Ph II\WO 4 I-64 Resurfacing\CADD\CADD Sheets\D876R99-sht-removal.dgn

QUIGG ENGINEERING INC

USER NAME = toverton	DESIGNED - RG	REVISED -	
	DRAWN - RG	REVISED -	
PLOT SCALE = 0.16666633 ' / In.	CHECKED - SMK	REVISED -	
PLOT DATE = 11/22/2024	DATE - 12/02/2024	REVISED -	

STATE OF ILLINOIS
DEPARTMENT OF TRANSPORTATION

REMOVAL PLANS
I-64

SCALE: 1"=50' | SHEET 23 OF 31 SHEETS | STA. 689+64.42 R2 | TO STA. 704+64.42 R2

F.A.I RTE.	SECTION	COUNTY	TOTAL SHEETS	SHEET NO.
64	82-(4,5,6,7)-1RS-2	ST. CLAIR	388	62
		CONTRACT NO. 76R99		
	ILLINOIS	FED. AID PROJECT		

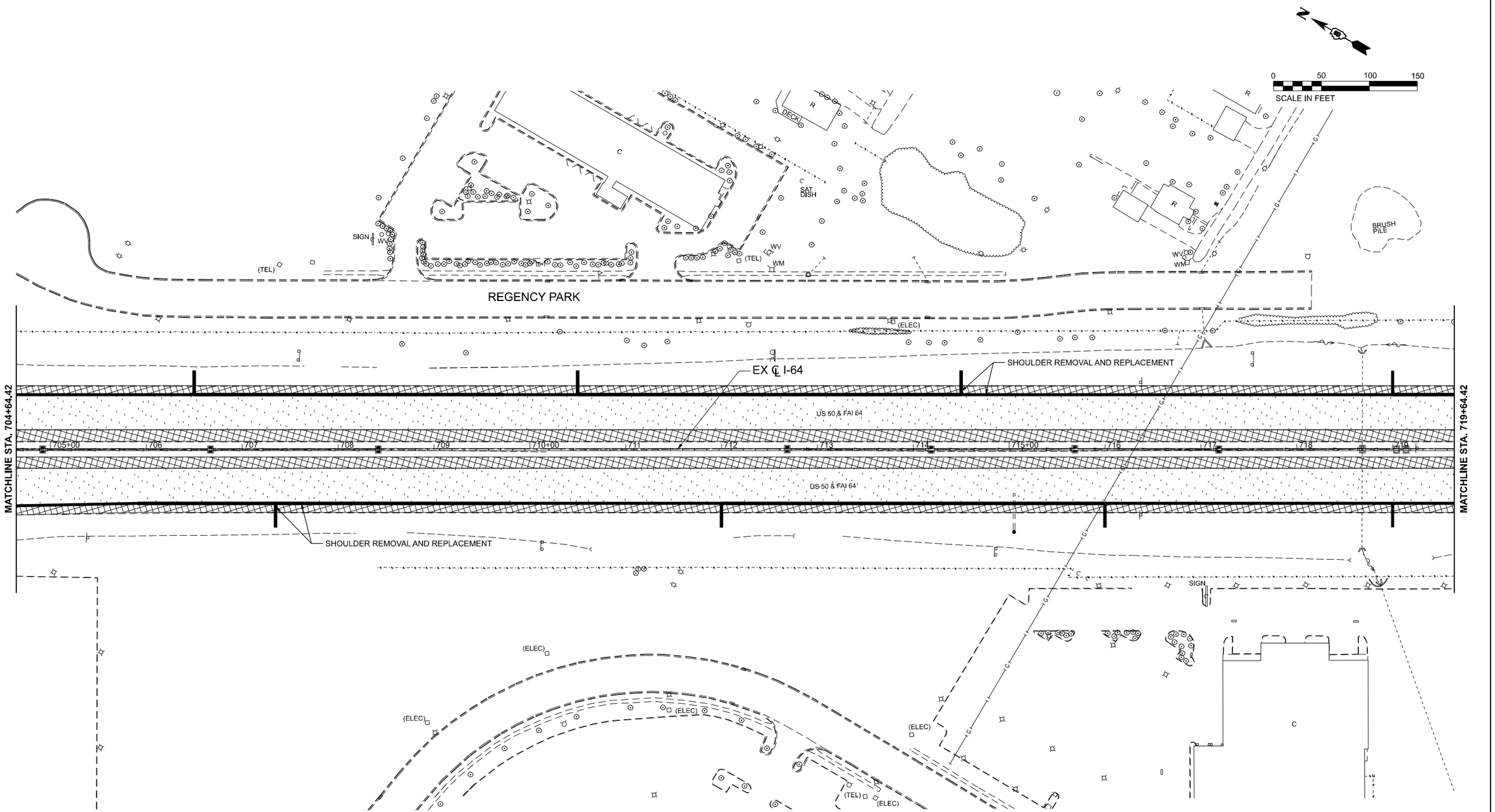

LEGEND

- ROADWAY - HOT-MIX ASPHALT SURFACE REMOVAL, 5"
- SHOULDER - HOT-MIX ASPHALT SURFACE REMOVAL, 5"
- PAVED SHOULDER REMOVAL
- LINEAR REMOVAL

MODEL: I64_CL-24 [Sheet]
FILE NAME: S:\2021\21IL007 - PTB 198-30 D8 - Willett Hofmann - Various Ph I-IIWO 4 I-64 Resurfacing\CADD\CADD Sheets\D876R99-sht-removal.dgn

QUIGG ENGINEERING INC

USER NAME = toverton	DESIGNED - RG	REVISED -	
	DRAWN - RG	REVISED -	
PLOT SCALE = 0.16666633 ' / in.	CHECKED - SMK	REVISED -	
PLOT DATE = 11/22/2024	DATE - 12/02/2024	REVISED -	

STATE OF ILLINOIS
DEPARTMENT OF TRANSPORTATION

REMOVAL PLANS
I-64

SCALE: 1"=50' | SHEET 24 OF 31 SHEETS | STA. 704+64.42 R2 | TO STA. 719+64.42 R2

F.A.I RTE.	SECTION	COUNTY	TOTAL SHEETS	SHEET NO.
64	82-(4,5,6,7)-1RS-2	ST. CLAIR	388	63
		CONTRACT NO. 76R99		
	ILLINOIS	FED. AID PROJECT		

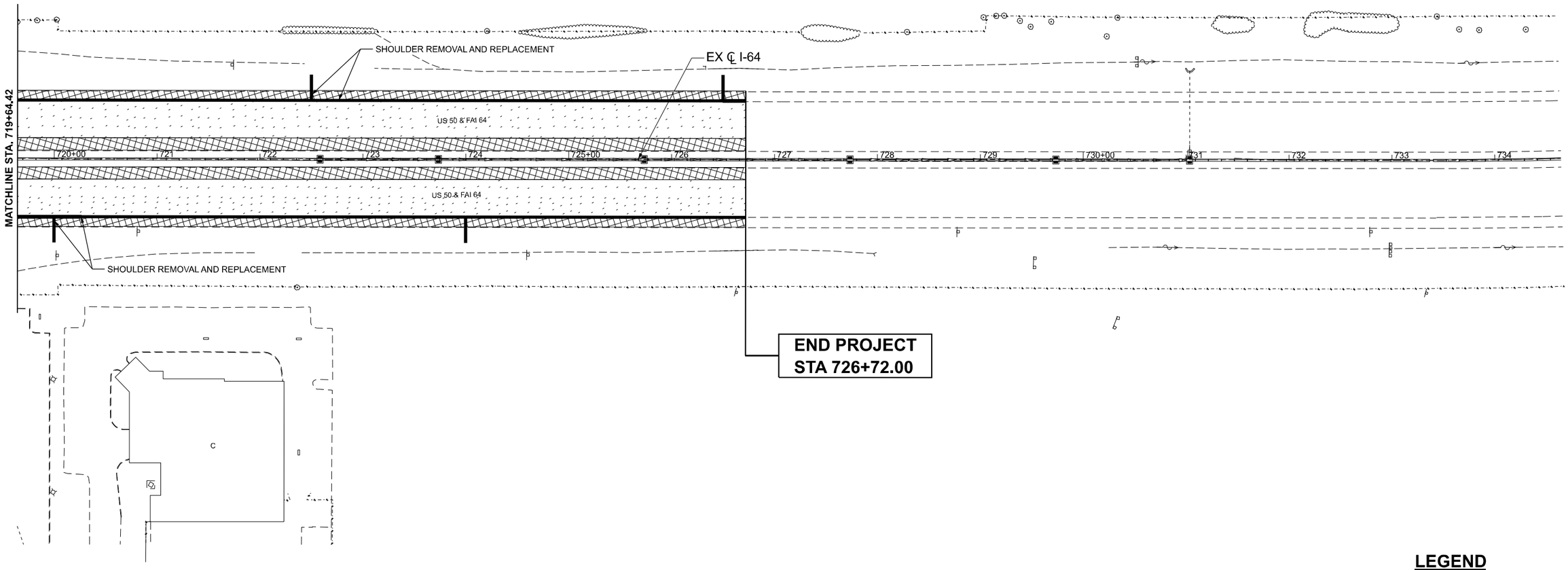

LEGEND

- ROADWAY - HOT-MIX ASPHALT SURFACE REMOVAL, 5"
- SHOULDER - HOT-MIX ASPHALT SURFACE REMOVAL, 5"
- PAVED SHOULDER REMOVAL
- LINEAR REMOVAL

MODEL: I64_CL-25 [Sheet]
FILE NAME: S:\2021\21L007 - PTB 199-30 D8 - Willett Hofmann - Various Ph I\IWO 4 I-64 Resurfacing\CADD\CADD Sheets\D876R99-sht-removal.dgn

QUIGG ENGINEERING INC

USER NAME = toverton		DESIGNED - RG		REVISED -	
		DRAWN - RG		REVISED -	
PLOT SCALE = 0.16666633 ' / in.		CHECKED - SMK		REVISED -	
PLOT DATE = 11/22/2024		DATE - 12/02/2024		REVISED -	

STATE OF ILLINOIS
DEPARTMENT OF TRANSPORTATION

REMOVAL PLANS
I-64

SCALE: 1"=50' | SHEET 25 OF 31 SHEETS | STA. 719+64.42 R2 | TO STA. 734+64.42 R2

F.A.I RTE.	SECTION	COUNTY	TOTAL SHEETS	SHEET NO.
64	82-(4,5,6,7)-1RS-2	ST. CLAIR	388	64
		CONTRACT NO. 76R99		
	ILLINOIS FED. AID PROJECT			

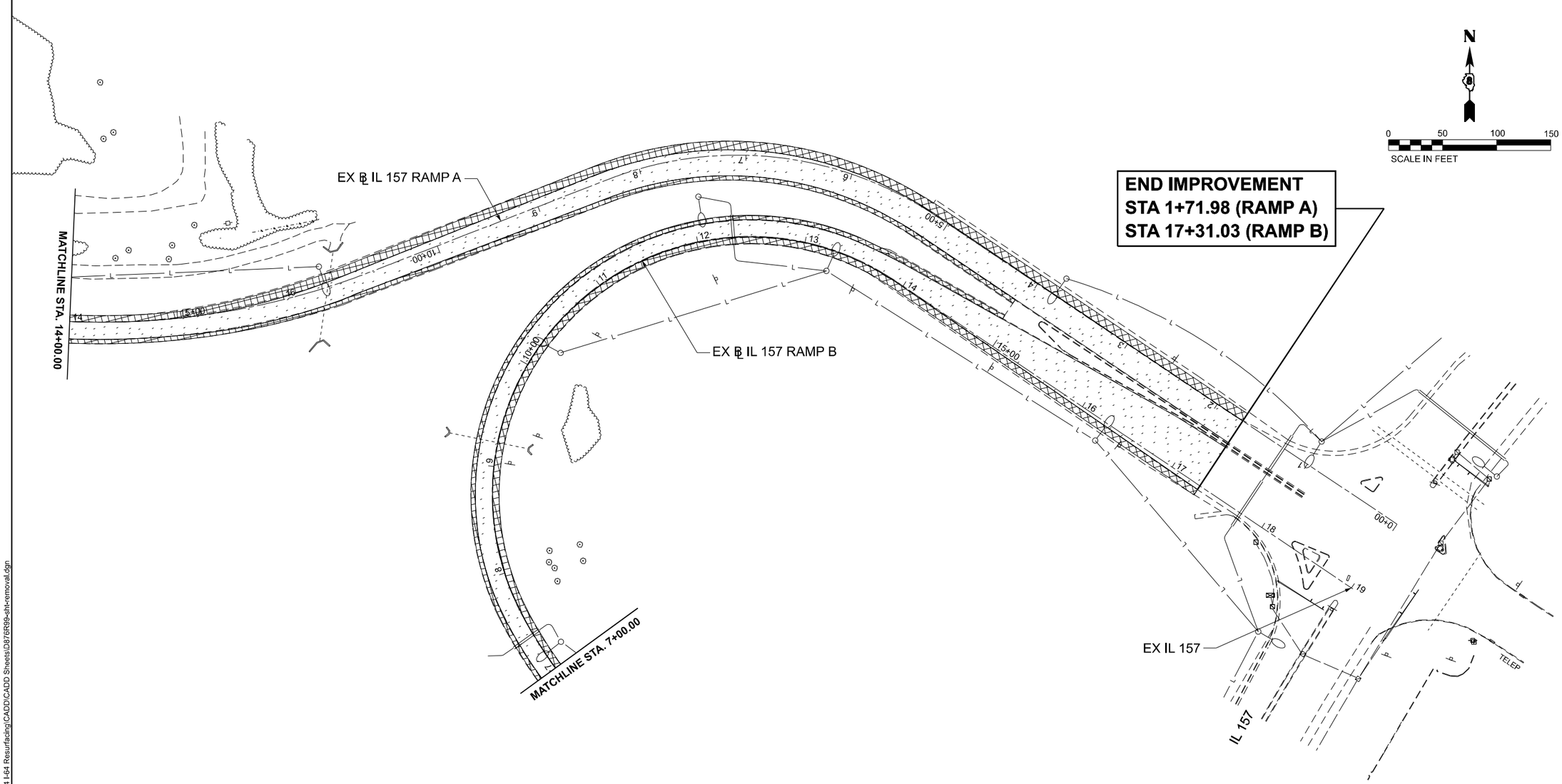

LEGEND

- ROADWAY - HOT-MIX ASPHALT SURFACE REMOVAL, 5"
- SHOULDER - HOT-MIX ASPHALT SURFACE REMOVAL, 5"
- PAVED SHOULDER REMOVAL
- LINEAR REMOVAL

QUIGG ENGINEERING INC

USER NAME = toverton	DESIGNED - RG	REVISED -
	DRAWN - RG	REVISED -
PLOT SCALE = 0.16666633 ' / in.	CHECKED - SMK	REVISED -
PLOT DATE = 11/22/2024	DATE - 12/02/2024	REVISED -

STATE OF ILLINOIS
DEPARTMENT OF TRANSPORTATION

REMOVAL PLANS
IL 157 RAMPS

SCALE: 1"=50' | SHEET 26 OF 31 SHEETS | STA. | TO STA.

F.A.I RTE.	SECTION	COUNTY	TOTAL SHEETS	SHEET NO.
64	82-(4,5,6,7)-1RS-2	ST. CLAIR	388	65
		CONTRACT NO. 76R99		
	ILLINOIS FED. AID PROJECT			

MODEL: IL 157 North [Sheet]
FILE NAME: S:\2021\21IL007 - PTB 189-30 D8 - Willett Hofmann - Various Ph I-IIWO 4 I-64 Resurfacing\CADD\CADD Sheets\D876R99-sht-removal.dgn

MATCHLINE STA. 10+00.00

MATCHLINE STA. 9+00.00

EX ℄ IL 157 RAMP D

EX ℄ IL 157 RAMP C

END IMPROVEMENT
STA 18+41.51

END IMPROVEMENT
STA 1+58.02

IL 157

ELECTRICAL LINE

SIGN

PHONE

GAS PIPE

GAS PIPE

GAS PIPE

N

0 50 100 150

SCALE IN FEET

LEGEND

- ROADWAY - HOT-MIX ASPHALT SURFACE REMOVAL, 5"
- SHOULDER - HOT-MIX ASPHALT SURFACE REMOVAL, 5"
- PAVED SHOULDER REMOVAL
- LINEAR REMOVAL

MODEL: IL 157 South [Sheet]
FILE NAME: S:\2021\21L007 - PTB 199-30 D8 - Willett Hofmann - Various Ph I,IIWO 4 I-64 Resurfacing\CADD\CADD Sheets\D876R99-sht-removal.dgn

QUIGG ENGINEERING INC

USER NAME = toverton	DESIGNED - RG	REVISED -	
	DRAWN - RG	REVISED -	
PLOT SCALE = 0.16666633 ' / in.	CHECKED - SMK	REVISED -	
PLOT DATE = 11/22/2024	DATE - 12/02/2024	REVISED -	

STATE OF ILLINOIS
DEPARTMENT OF TRANSPORTATION

REMOVAL PLANS
IL 157 RAMPS

SCALE: 1"=50' | SHEET 27 OF 31 SHEETS | STA. | TO STA.

F.A.I RTE.	SECTION	COUNTY	TOTAL SHEETS	SHEET NO.
64	82-(4,5,6,7)-1RS-2	ST. CLAIR	388	66
		CONTRACT NO. 76R99		
	ILLINOIS FED. AID PROJECT			

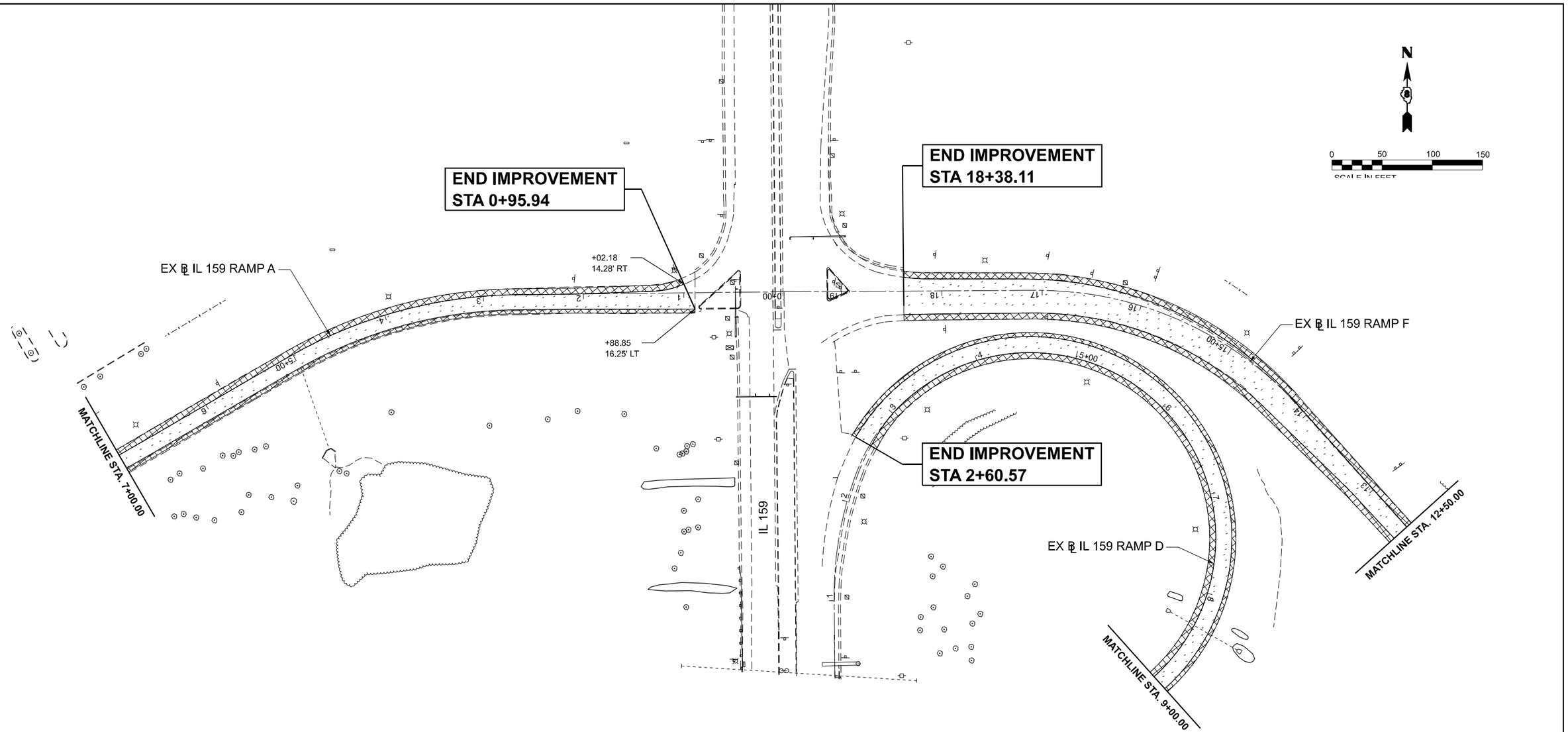

LEGEND

- ROADWAY - HOT-MIX ASPHALT SURFACE REMOVAL, 5"
- SHOULDER - HOT-MIX ASPHALT SURFACE REMOVAL, 5"
- PAVED SHOULDER REMOVAL
- LINEAR REMOVAL

MODEL: IL 159 North [Sheet]
FILE NAME: S:\2021211L007 - PTB 199-30 D8 - Willett Hofmann - Various Ph II\IWO 4 I-64 Resurfacing\CADD\CADD Sheets\D876R99-sht-removal.dgn

QUIGG ENGINEERING INC

USER NAME = toverton		DESIGNED - RG		REVISED -
		DRAWN - RG		REVISED -
PLOT SCALE = 0.16666633 ' / in.		CHECKED - SMK		REVISED -
PLOT DATE = 11/22/2024		DATE - 12/02/2024		REVISED -

STATE OF ILLINOIS
DEPARTMENT OF TRANSPORTATION

REMOVAL PLANS
IL 159 RAMPS

SCALE: 1"=50' | SHEET 28 OF 31 SHEETS | STA. | TO STA.

F.A.I RTE.	SECTION	COUNTY	TOTAL SHEETS	SHEET NO.
64	82-(4,5,6,7)-1RS-2	ST. CLAIR	388	67
		CONTRACT NO. 76R99		
	ILLINOIS FED. AID PROJECT			

MATCHLINE STA. 11+00.00

MATCHLINE STA. 10+00.00

EX ℄ IL 159 RAMP C

END IMPROVEMENT
STA 1+76.26

EX ℄ IL 159 RAMP B

EX ℄ IL 159 RAMP B

+56.54
36.73' LT

IL 159

+57.63
43.53' RT

END IMPROVEMENT
STA 19+65.24

EX ℄ IL 159 RAMP E

MATCHLINE STA. 6+00.00

END IMPROVEMENT
STA 2+00.00

N

0 50 100 150
SCALE IN FEET

LEGEND

- ROADWAY - HOT-MIX ASPHALT SURFACE REMOVAL, 5"
- SHOULDER - HOT-MIX ASPHALT SURFACE REMOVAL, 5"
- PAVED SHOULDER REMOVAL
- LINEAR REMOVAL

MODEL: IL 159 South [Sheet]
FILE NAME: S:\2021\21IL007 - PTB 198-30 D8 - Willett Hofmann - Various Ph I-IIWO 4 I-64 Resurfacing\CADD\CADD Sheets\D876R99-sht-removal.dgn

QUIGG ENGINEERING INC

USER NAME = toverton	DESIGNED - RG	REVISED -	
	DRAWN - RG	REVISED -	
PLOT SCALE = 0.16666633 ' / in.	CHECKED - SMK	REVISED -	
PLOT DATE = 11/22/2024	DATE - 12/02/2024	REVISED -	

STATE OF ILLINOIS
DEPARTMENT OF TRANSPORTATION

REMOVAL PLANS
IL 159 RAMPS

SCALE: 1"=50' | SHEET 29 OF 31 SHEETS | STA. | TO STA.

F.A.I RTE.	SECTION	COUNTY	TOTAL SHEETS	SHEET NO.
64	82-(4,5,6,7)-1RS-2	ST. CLAIR	388	68
		CONTRACT NO. 76R99		
	ILLINOIS	FED. AID PROJECT		

N

0 50 100 150

SCALE IN FEET

EX ℄ US 50 RAMP C

END IMPROVEMENT
STA 3+97.28

EX ℄ I-64

US 50

EX ℄ US 50 RAMP B

LEGEND

- ROADWAY - HOT-MIX ASPHALT SURFACE REMOVAL, 5"
- SHOULDER - HOT-MIX ASPHALT SURFACE REMOVAL, 5"
- PAVED SHOULDER REMOVAL
- LINEAR REMOVAL

MODEL: HWY 50 East [Sheet]
FILE NAME: S:\2021\21IL007 - PTB 199-30 D8 - Willett Hofmann - Various Ph III\WO 4 I-64 Resurfacing\CADD\CADD Sheets\D8776f699-shl-removal.dgn

QUIGG ENGINEERING INC

USER NAME = toverton		DESIGNED - RG		REVISED -	
		DRAWN - RG		REVISED -	
PLOT SCALE = 0.16666633 ' / In.		CHECKED - SMK		REVISED -	
PLOT DATE = 12/2/2024		DATE - 12/02/2024		REVISED -	

STATE OF ILLINOIS
DEPARTMENT OF TRANSPORTATION

REMOVAL PLANS
HIGHWAY 50 RAMPS

SCALE: 1"=50' | SHEET 30 OF 31 SHEETS | STA. | TO STA.

F.A.I RTE.	SECTION	COUNTY	TOTAL SHEETS	SHEET NO.
64	82-(4,5,6,7)-1RS-2	ST. CLAIR	388	69
		CONTRACT NO. 76R99		
	ILLINOIS FED. AID PROJECT			

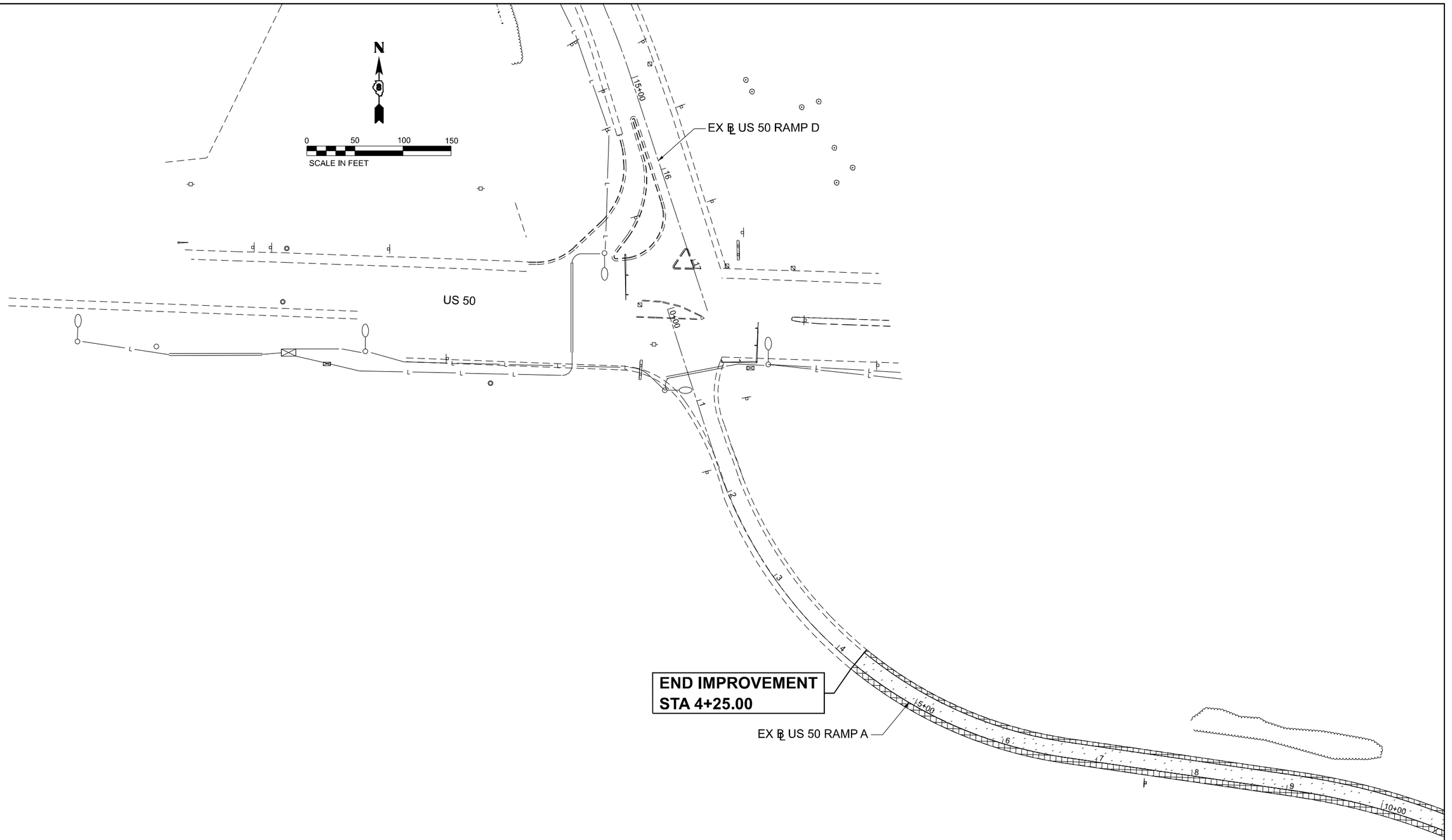

LEGEND

- ROADWAY - HOT-MIX ASPHALT SURFACE REMOVAL, 5"
- SHOULDER - HOT-MIX ASPHALT SURFACE REMOVAL, 5"
- PAVED SHOULDER REMOVAL
- LINEAR REMOVAL

MODEL: HWY 50 West [Sheet]
FILE NAME: S:\2021\21L007 - PTB 199-30 D8 - Willett Hofmann - Various Ph HIWO 4 I-64 Resurfacing\CADD\CADD Sheets\D876R99-slit-removal.dgn

QUIGG ENGINEERING INC

USER NAME = toverton		DESIGNED - RG	REVISED -	
		DRAWN - RG	REVISED -	
PLOT SCALE = 0.16666633 ' / In.		CHECKED - SMK	REVISED -	
PLOT DATE = 12/2/2024		DATE - 12/02/2024	REVISED -	

STATE OF ILLINOIS
DEPARTMENT OF TRANSPORTATION

REMOVAL PLANS
HIGHWAY 50 RAMPS

SCALE: 1"=50' | SHEET 31 OF 31 SHEETS | STA. | TO STA.

F.A.I RTE.	SECTION	COUNTY	TOTAL SHEETS	SHEET NO.
64	82-(4,5,6,7)-1RS-2	ST. CLAIR	388	70
		CONTRACT NO. 76R99		
	ILLINOIS	FED. AID PROJECT		

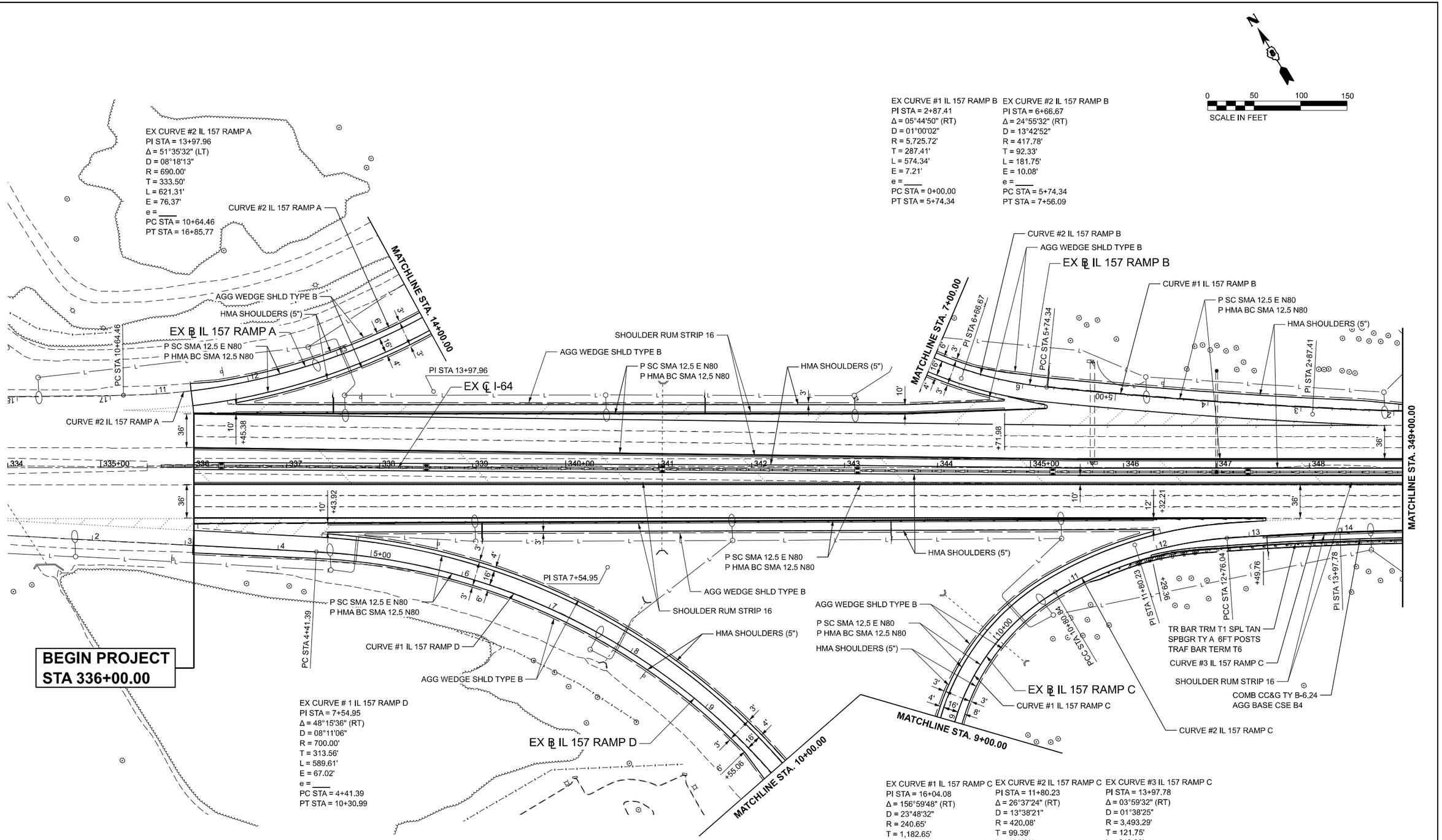

MODEL: I64_CL-1 [Sheet]
FILE NAME: S:\2021\21IL007 - PTB 198-30 D8 - Willett Hofmann - Various Ph I-IIWO 4 I-64 Resurfacing\CADD\CADD Sheets\D876R99-sht-plan.dgn

QUIGG ENGINEERING INC

USER NAME = rgoertz	DESIGNED - RG	REVISED -	
	DRAWN - RG	REVISED -	
PLOT SCALE = 0.16666633 ' / in.	CHECKED - SMK	REVISED -	
PLOT DATE = 11/25/2024	DATE - 12/02/2024	REVISED -	

STATE OF ILLINOIS
DEPARTMENT OF TRANSPORTATION

ROADWAY PLANS
I-64

SCALE: 1"=50' | SHEET 1 OF 31 SHEETS | STA. 334+00.00 | TO STA. 349+00.00

F.A.I RTE.	SECTION	COUNTY	TOTAL SHEETS	SHEET NO.
64	82-(4,5,6,7)-1RS-2	ST. CLAIR	388	71
		CONTRACT NO. 76R99		
	ILLINOIS FED. AID PROJECT			

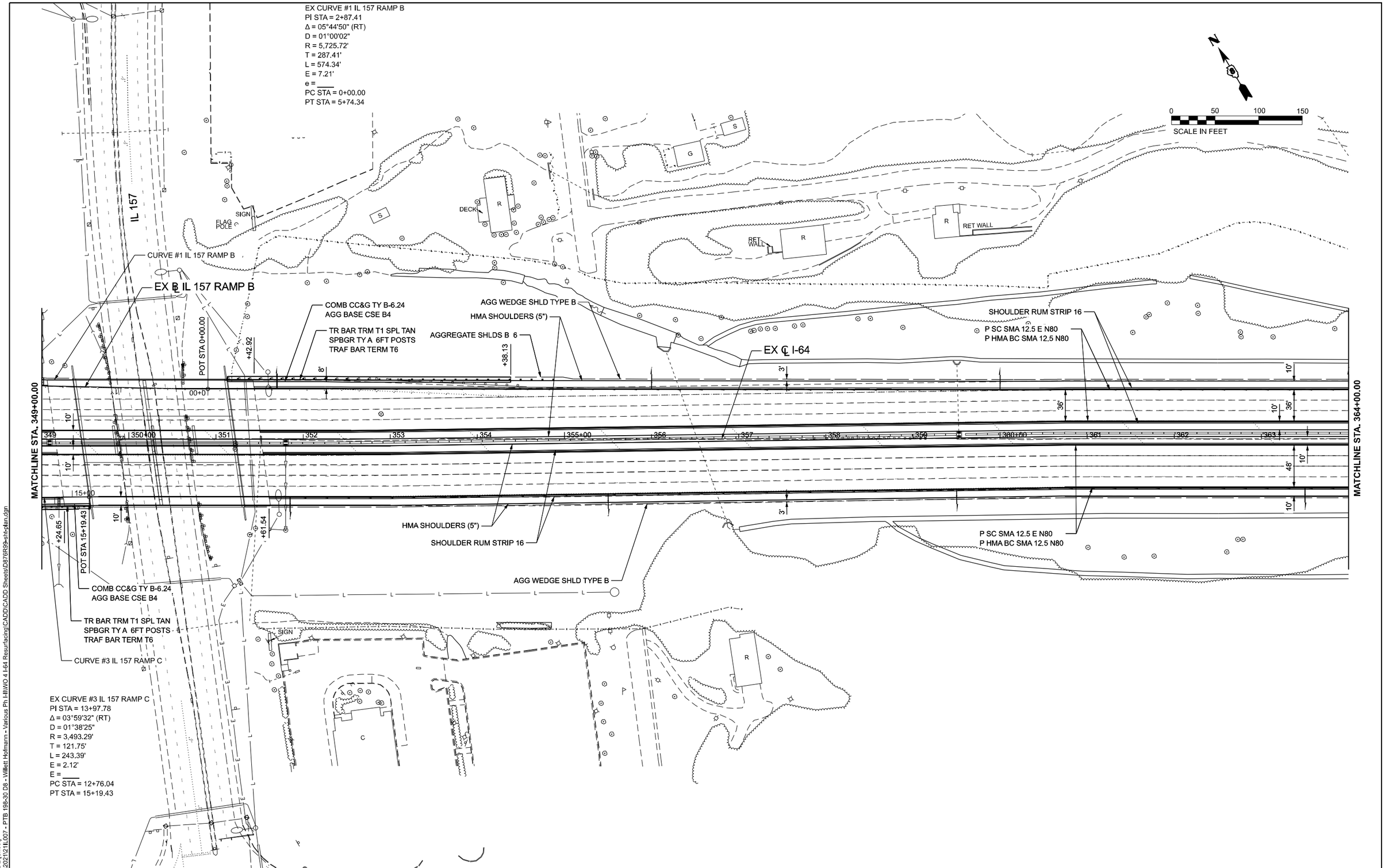

MODEL: I64_CL-2 [Sheet]
FILE NAME: S:\2021\21IL007 - PTB 198-30 D8 - Willett Hofmann - Various Ph I-II\WO 4 I-64 Resurfacing\CADD\CADD Sheets\D876R99-sht-plan.dgn

QUIGG ENGINEERING INC

USER NAME = rgoertz	DESIGNED - RG	REVISED -	
	DRAWN - RG	REVISED -	
PLOT SCALE = 0.16666633 ' / in.	CHECKED - SMK	REVISED -	
PLOT DATE = 11/22/2024	DATE - 12/02/2024	REVISED -	

STATE OF ILLINOIS
DEPARTMENT OF TRANSPORTATION

ROADWAY PLANS
I-64

SCALE: 1"=50' | SHEET 2 OF 31 SHEETS | STA. 349+00.00 TO STA. 364+00.00

F.A.I RTE.	SECTION	COUNTY	TOTAL SHEETS	SHEET NO.
64	82-(4,5,6,7)-1RS-2	ST. CLAIR	388	72
		CONTRACT NO. 76R99		
		ILLINOIS	FED. AID PROJECT	

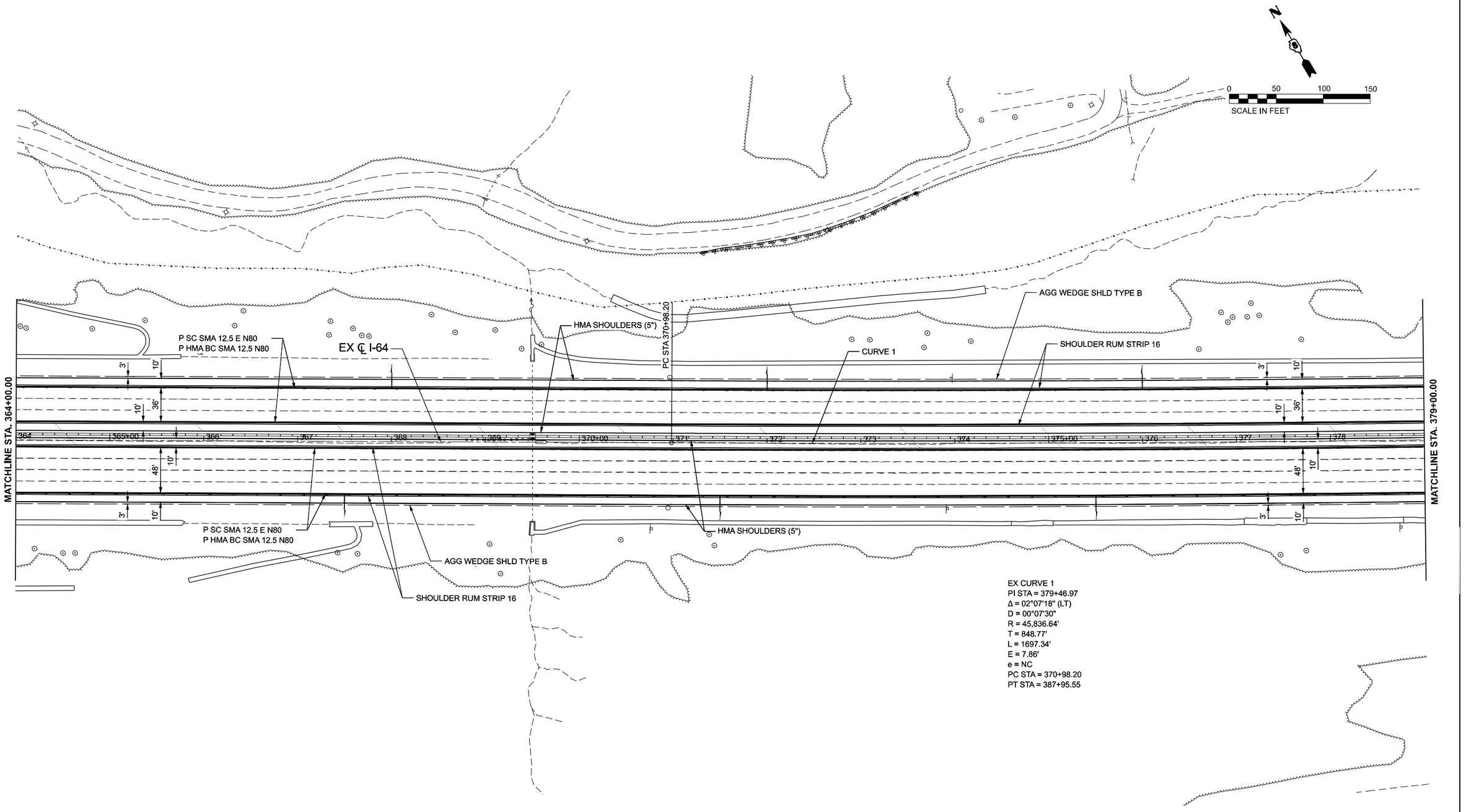

EX CURVE 1
PI STA = 379+46.97
Δ = 02°07'18" (LT)
D = 00°07'30"
R = 45,836.64'
T = 848.77'
L = 1697.34'
E = 7.86'
e = NC
PC STA = 370+98.20
PT STA = 387+95.55

MODEL: I64_CL-3 [Sheet]
FILE NAME: S:\2021\21IL007 - PTB 198-30 D8 - Willett Hofmann - Various Ph III\WO 4 I-64 Resurfacing\CADD\CADD Sheets\D876R99-sht-plan.dgn

QUIGG ENGINEERING INC

USER NAME = toverton	DESIGNED - RG	REVISED -	
	DRAWN - RG	REVISED -	
PLOT SCALE = 0.16666633 ' / in.	CHECKED - SMK	REVISED -	
PLOT DATE = 11/4/2024	DATE -	REVISED -	

STATE OF ILLINOIS
DEPARTMENT OF TRANSPORTATION

ROADWAY PLANS
I-64

SCALE: 1"=50' | SHEET 3 OF 31 SHEETS | STA. 364+00.00 | TO STA. 379+00.00

F.A.I RTE.	SECTION	COUNTY	TOTAL SHEETS	SHEET NO.
64	82-(4,5,6,7)-1RS-2	ST. CLAIR	388	73
		CONTRACT NO. 76R99		
	ILLINOIS FED. AID PROJECT			

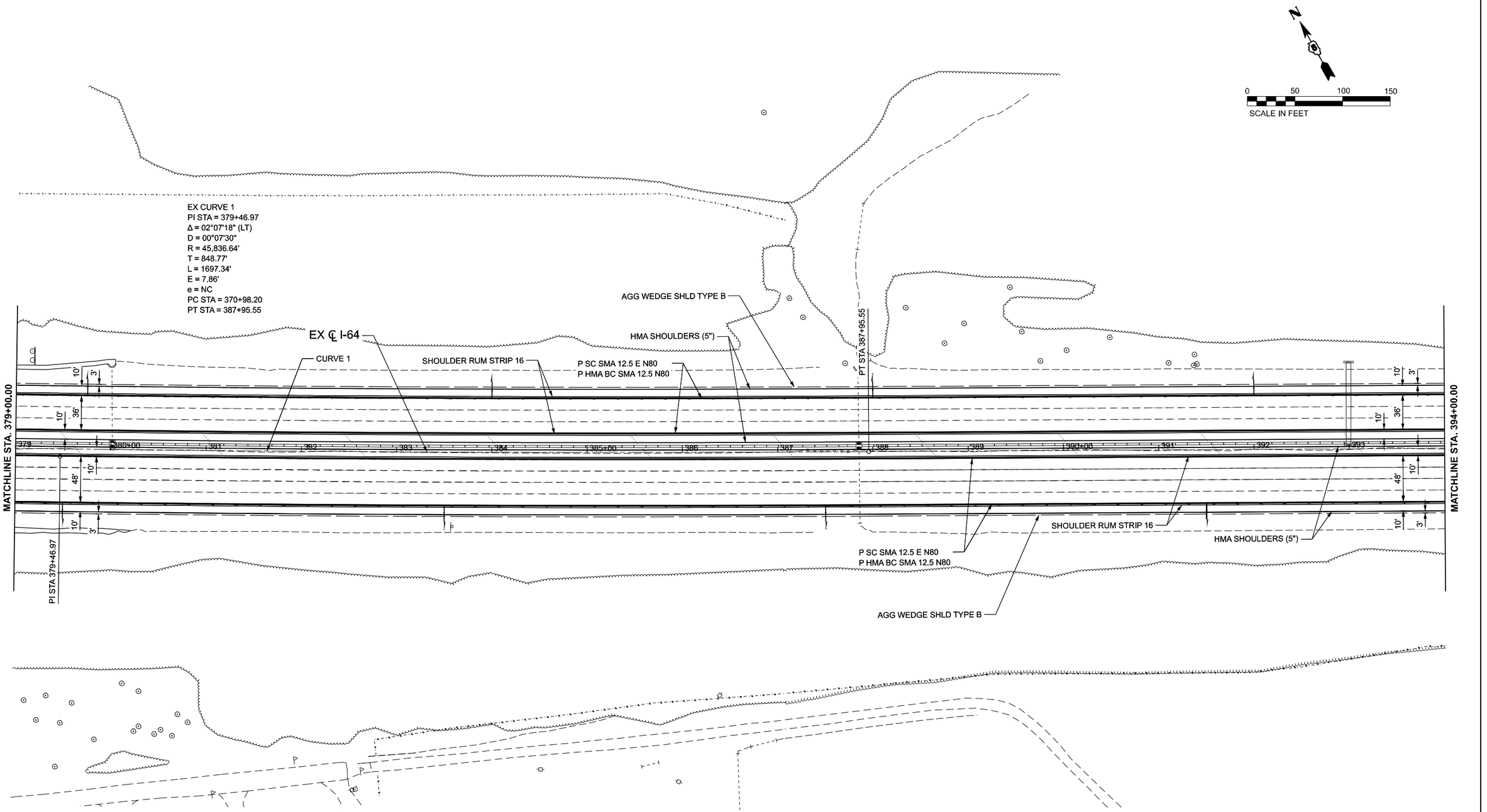

MODEL: I64_CL-4 [Sheet]
FILE NAME: S:\2021\21IL007 - PTB 198-30 D8 - Willett Hofmann - Various Ph III\WO 4 I-64 Resurfacing\CADD\CADD Sheets\D876f39-sht-plan.dgn

QUIGG ENGINEERING INC

USER NAME = toverton	DESIGNED - RG	REVISED -	
	DRAWN - RG	REVISED -	
PLOT SCALE = 0.16666633 ' / In.	CHECKED - SMK	REVISED -	
PLOT DATE = 11/27/2024	DATE - 12/02/2024	REVISED -	

STATE OF ILLINOIS
DEPARTMENT OF TRANSPORTATION

ROADWAY PLANS
I-64

SCALE: 1"=50' | SHEET 4 OF 31 SHEETS | STA. 379+00.00 | TO STA. 394+00.00

F.A.I RTE.	SECTION	COUNTY	TOTAL SHEETS	SHEET NO.
64	82-(4,5,6,7)-1RS-2	ST. CLAIR	388	74
		CONTRACT NO. 76R99		
	ILLINOIS FED. AID PROJECT			

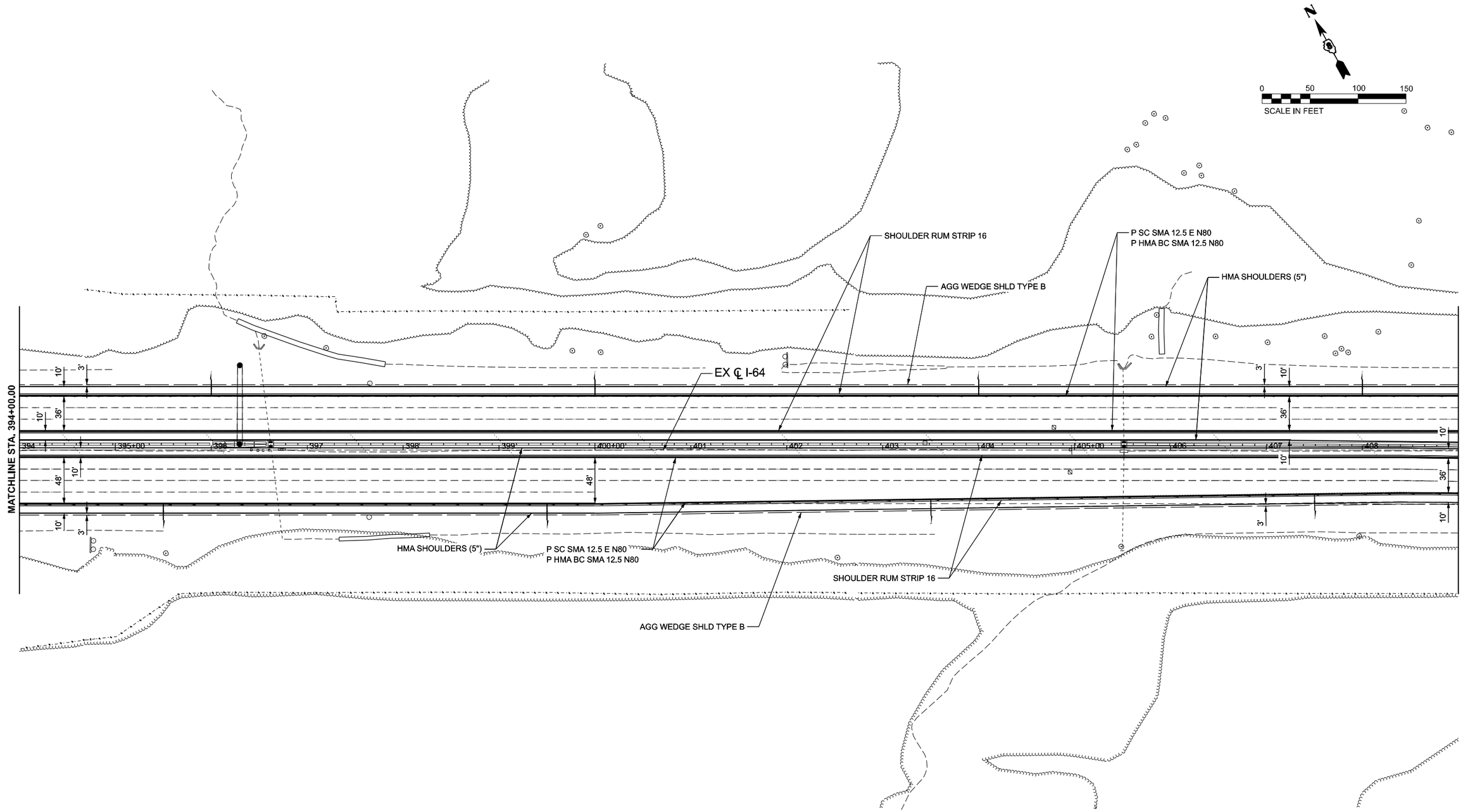

MODEL: I64_CL-5 [Sheet]
FILE NAME: S:\2021\21IL007 - PTB 198-30 D8 - Willett Hofmann - Various Ph III\WO 4 I-64 Resurfacing\CADD\CADD Sheets\D876f39-shl-plan.dgn

QUIGG ENGINEERING INC

USER NAME = toverton	DESIGNED - RG	REVISED -
	DRAWN - RG	REVISED -
PLOT SCALE = 0.16666633 ' / In.	CHECKED - SMK	REVISED -
PLOT DATE = 11/4/2024	DATE -	REVISED -

STATE OF ILLINOIS
DEPARTMENT OF TRANSPORTATION

ROADWAY PLANS
I-64

SCALE: 1"=50' | SHEET 5 OF 31 SHEETS | STA. 394+00.00 | TO STA. 409+00.00

F.A.I RTE.	SECTION	COUNTY	TOTAL SHEETS	SHEET NO.
64	82-(4,5,6,7)-1RS-2	ST. CLAIR	388	75
		CONTRACT NO. 76R99		
	ILLINOIS FED. AID PROJECT			

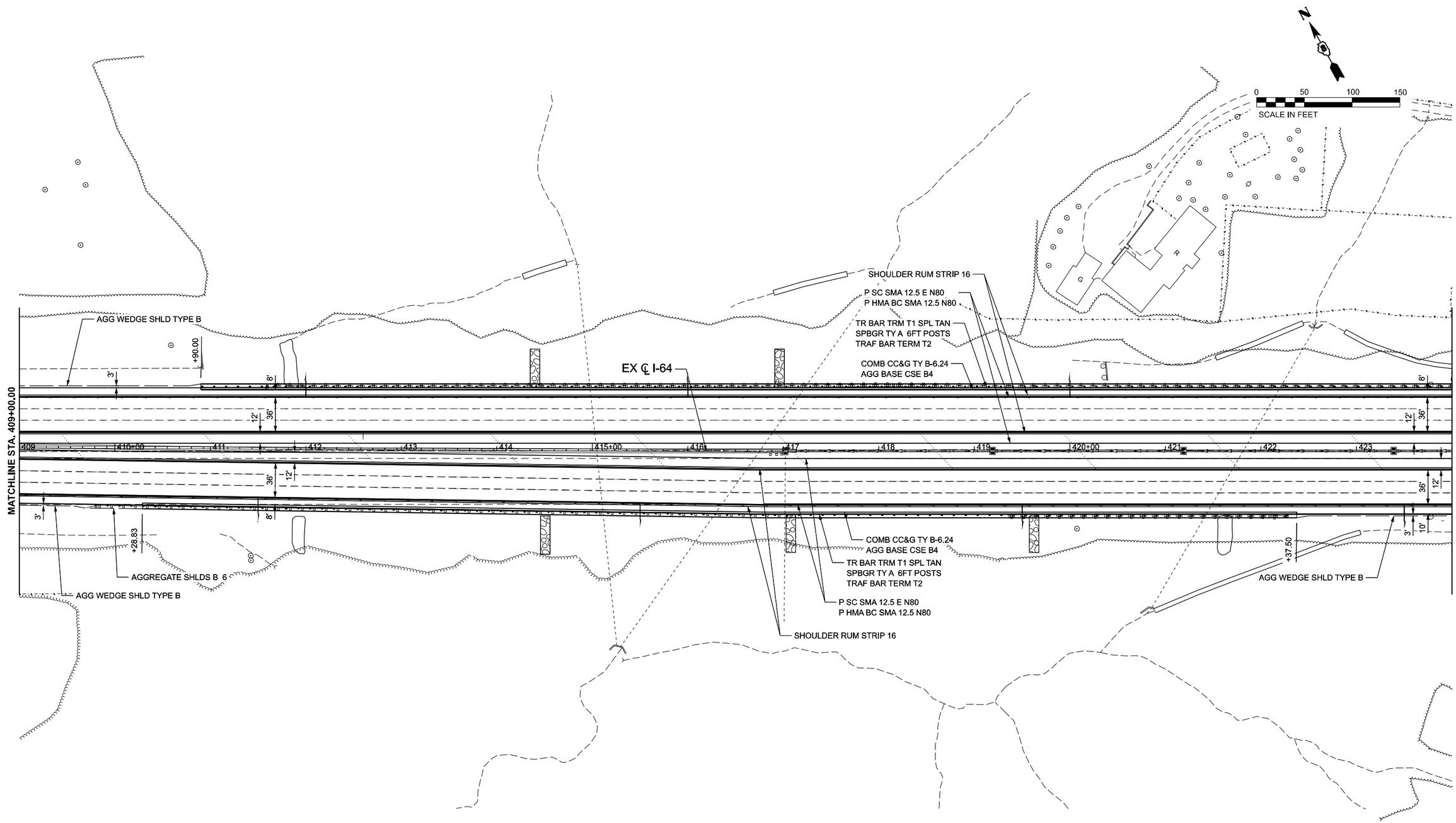

QUIGG ENGINEERING INC	USER NAME = toverton	DESIGNED - RG	REVISED -	**STATE OF ILLINOIS DEPARTMENT OF TRANSPORTATION**	**ROADWAY PLANS I-64**
		DRAWN - RG	REVISED -		
	PLOT SCALE = 0.16666833 ' / in.	CHECKED - SMK	REVISED -		SCALE: 1"=50' SHEET 6 OF 31 SHEETS STA. 409+00.00 TO STA. 424+00.00
	PLOT DATE = 11/4/2024	DATE -	REVISED -		

F.A.I RTE.	SECTION	COUNTY	TOTAL SHEETS	SHEET NO.
64	82-(4,5,6,7)-1RS-2	ST. CLAIR	388	76
		CONTRACT NO. 76R99		
	ILLINOIS FED. AID PROJECT			

MODEL: I64_CL-6 [Sheet]
FILE NAME: S:\2021\21IL007 - PTB 198-30 D8 - Willett Hofmann - Various Ph I-IIIWO 4 I-64 Resurfacing\CADD\CADD Sheets\D876R99-sht-plan.dgn

N

0 50 100 150
SCALE IN FEET

TR BAR TRM T1 SPL TAN
SPBGR TY A 6FT POSTS
TRAF BAR TERM T2
COMB CC&G TY B-6.24
AGG BASE CSE B4
+15.00
AGGREGATE SHLDS B 6
AGG WEDGE SHLD TYPE B
EX ℄ I-64
P SC SMA 12.5 E N80
P HMA BC SMA 12.5 N80
HMA SHOULDERS (5")
SHOULDER RUM STRIP 16
PC STA 436+77.22
8'
3'
12'
36'
10'

MATCHLINE STA. 424+00.00

424 425+00 426 427 428 429 430+00 431 432 433 434 435+00 436 437 438

MATCHLINE STA. 439+00.00

AGG WEDGE SHLD TYPE B
SHOULDER RUM STRIP 16
HMA SHOULDERS (5")
P SC SMA 12.5 E N80
P HMA BC SMA 12.5 N80
CURVE 2
HOLY CROSS RD

EX CURVE 2
PI STA = 451+30.19
Δ = 28°27'34" (LT)
D = 01°00'00"
R = 5,729.58'
T = 1,452.98'
L = 2845.96'
E = 181.36'
e = 2.8%
PC STA = 436+77.22
PT STA = 465+23.17

MODEL: I64_CL-7 [Sheet]
FILE NAME: S:\2021\21IL007 - PTB 198-30 D8 - Willett Hofmann - Various Ph I-II\WO 4 I-64 Resurfacing\CADD\CADD Sheets\D876R99-sht-plan.dgn

QUIGG ENGINEERING INC

USER NAME = toverton	DESIGNED - RG	REVISED -	
	DRAWN - RG	REVISED -	
PLOT SCALE = 0.16666633 ' / in.	CHECKED - SMK	REVISED -	
PLOT DATE = 11/4/2024	DATE -	REVISED -	

STATE OF ILLINOIS
DEPARTMENT OF TRANSPORTATION

ROADWAY PLANS
I-64

SCALE: 1"=50' | SHEET 7 OF 31 SHEETS | STA. 424+00.00 | TO STA. 439+00.00

F.A.I RTE.	SECTION	COUNTY	TOTAL SHEETS	SHEET NO.
64	82-(4,5,6,7)-1RS-2	ST. CLAIR	388	77
		CONTRACT NO. 76R99		
	ILLINOIS FED. AID PROJECT			

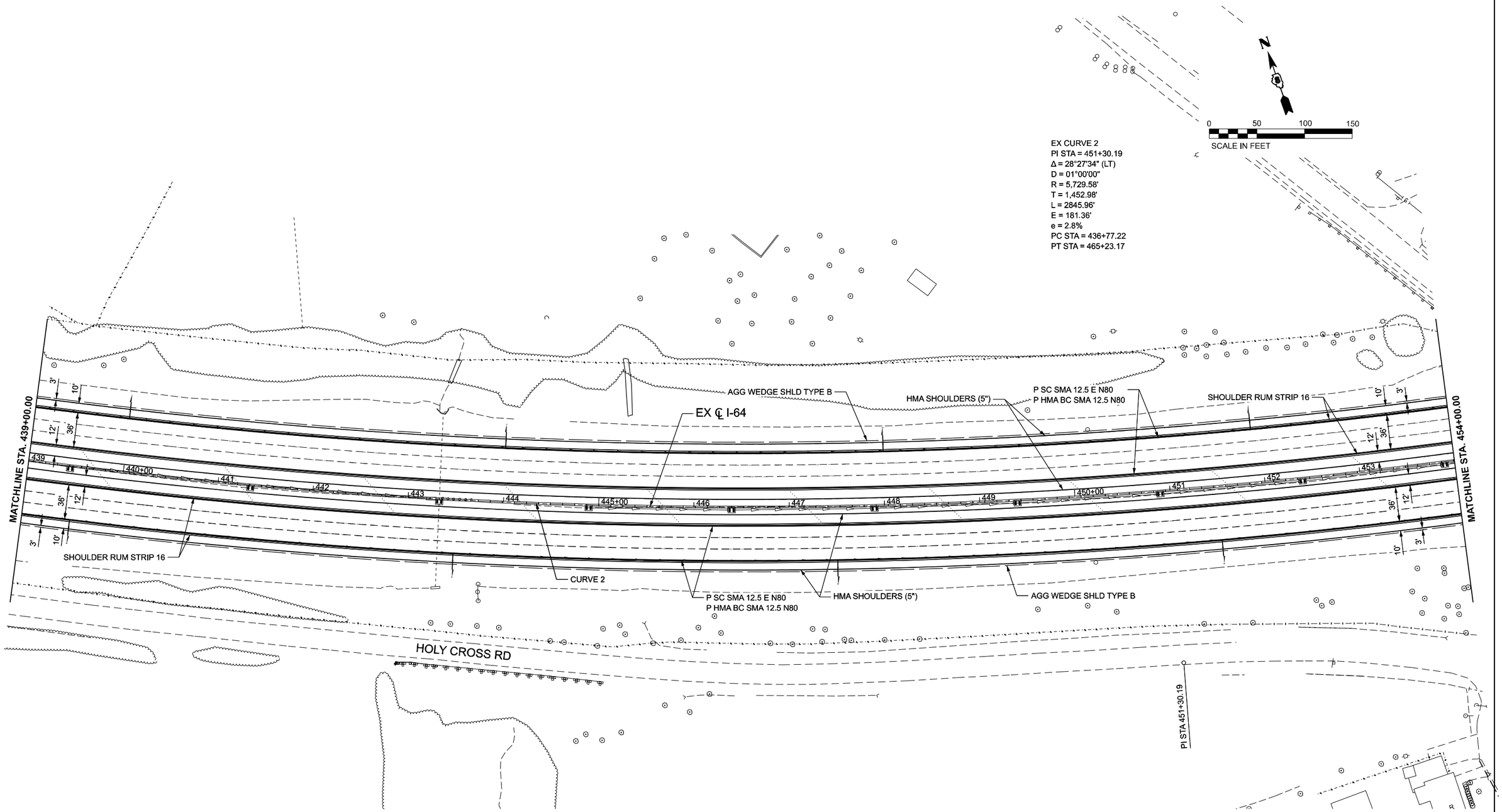

MODEL: I64_CL-8 [Sheet]
FILE NAME: S:\2021\21IL007 - PTB 198-30 D8 - Willett Hofmann - Various Ph I-HWO 4 I-64 Resurfacing\CADD\CADD Sheets\D876R99-sht-plan.dgn

QUIGG ENGINEERING INC

USER NAME = toverton	DESIGNED - RG	REVISED -
	DRAWN - RG	REVISED -
PLOT SCALE = 0.16666833 ' / in.	CHECKED - SMK	REVISED -
PLOT DATE = 11/4/2024	DATE -	REVISED -

STATE OF ILLINOIS
DEPARTMENT OF TRANSPORTATION

ROADWAY PLANS
I-64

SCALE: 1"=50' | SHEET 8 OF 31 SHEETS | STA. 439+00.00 | TO STA. 454+00.00

F.A.I RTE.	SECTION	COUNTY	TOTAL SHEETS	SHEET NO.
64	82-(4,5,6,7)-1RS-2	ST. CLAIR	388	78
		CONTRACT NO. 76R99		
	ILLINOIS FED. AID PROJECT			

N

0 50 100 150

SCALE IN FEET

EX CURVE 2
PI STA = 451+30.19
Δ = 28°27'34" (LT)
D = 01°00'00"
R = 5,729.58'
T = 1,452.98'
L = 2845.96'
E = 181.36'
e = 2.8%
PC STA = 436+77.22
PT STA = 465+23.17

MATCHLINE STA. 454+00.00

MATCHLINE STA. 469+00.00

PT STA 465+23.17

SHOULDER RUM STRIP 16

EX ℄ I-64

P SC SMA 12.5 E N80
P HMA BC SMA 12.5 N80

HMA SHOULDERS (5")

AGG WEDGE SHLD TYPE B

CURVE 2

BUNKUM RD

HOLY CROSS RD

DECK

10' 3' 12' 36'

454 455+00 456 457 458 459 460+00 461 462 463 464 465+00 466 467 468

MODEL: I64_CL-9 [Sheet]
FILE NAME: S:\2021\21IL007 - PTB 198-30 D8 - Willett Hofmann - Various Ph I\IWO 4 I-64 Resurfacing\CADD\CADD Sheets\D876R99-sht-plan.dgn

QUIGG ENGINEERING INC

USER NAME = toverton	DESIGNED - RG	REVISED -	
	DRAWN - RG	REVISED -	
PLOT SCALE = 0.16666633 ' / in.	CHECKED - SMK	REVISED -	
PLOT DATE = 11/4/2024	DATE -	REVISED -	

STATE OF ILLINOIS
DEPARTMENT OF TRANSPORTATION

ROADWAY PLANS
I-64

SCALE: 1"=50' | SHEET 9 OF 31 SHEETS | STA. 454+00.00 | TO STA. 469+00.00

F.A.I RTE.	SECTION	COUNTY	TOTAL SHEETS	SHEET NO.
64	82-(4,5,6,7)-1RS-2	ST. CLAIR	388	79
		CONTRACT NO. 76R99		
	ILLINOIS	FED. AID PROJECT		

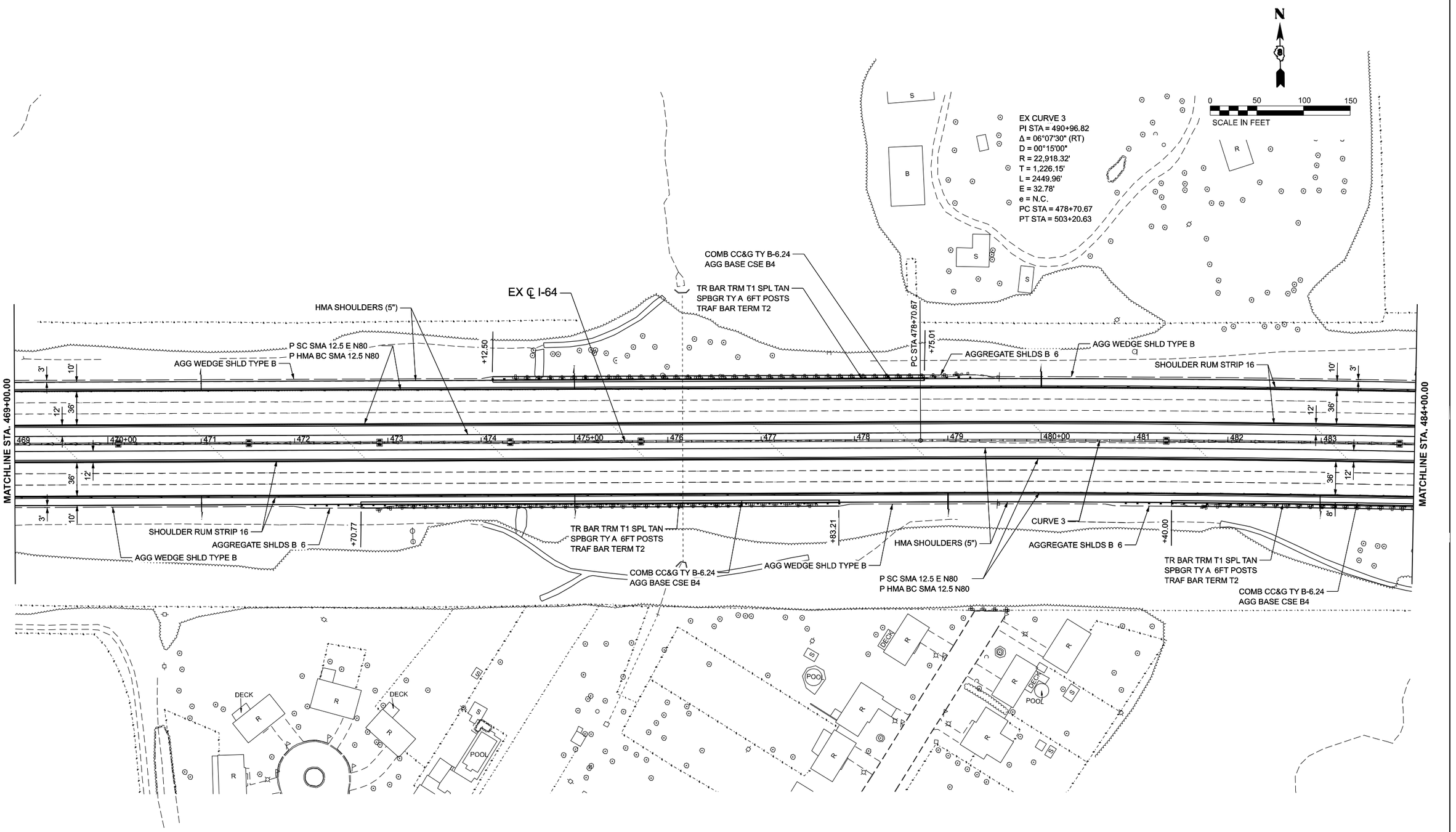

MODEL: I64_CL-10 [Sheet]
FILE NAME: S:\2021\21IL007 - PTB 198-30 D8 - Willett Hofmann - Various Ph III\WO 4 I-64 Resurfacing\CADD\CADD Sheets\D876R99-sht-plan.dgn

QUIGG ENGINEERING INC

USER NAME = toverton	DESIGNED - RG	REVISED -	
	DRAWN - RG	REVISED -	
PLOT SCALE = 0.16666633 ' / In.	CHECKED - SMK	REVISED -	
PLOT DATE = 11/4/2024	DATE -	REVISED -	

STATE OF ILLINOIS
DEPARTMENT OF TRANSPORTATION

ROADWAY PLANS
I-64

SCALE: 1"=50' | SHEET 10 OF 31 SHEETS | STA. 469+00.00 | TO STA. 484+00.00

F.A.I RTE.	SECTION	COUNTY	TOTAL SHEETS	SHEET NO.
64	82-(4,5,6,7)-1RS-2	ST. CLAIR	388	80
		CONTRACT NO. 76R99		
	ILLINOIS	FED. AID PROJECT		

EX CURVE 3
PI STA = 490+96.82
Δ = 06°07'30" (RT)
D = 00°15'00"
R = 22,918.32'
T = 1,226.15'
L = 2449.96'
E = 32.78'
e = N.C.
PC STA = 478+70.67
PT STA = 503+20.63

N

0 50 100 150
SCALE IN FEET

MATCHLINE STA. 484+00.00

AGG WEDGE SHLD TYPE B
+72.50
COMB CC&G TY B-6.24
AGG BASE CSE B4
TR BAR TRM T1 SPL TAN
SPBGR TY A 6FT POSTS
TRAF BAR TERM T2
P SC SMA 12.5 E N80
P HMA BC SMA 12.5 N80
HMA SHOULDERS (5")
PC STA 478+70.67
+97.64
AGGREGATE SHLDS B 6
AGG WEDGE SHLD TYPE B
EX ℄ I-64
+72.50
COMB CC&G TY B-6.24
AGG BASE CSE B4
TR BAR TRM T1 SPL TAN
SPBGR TY A 6FT POSTS
TRAF BAR TERM T2
SHOULDER RUM STRIP 16
10'
3'
8'
12'
36'
484
485+00
486
487
488
489
490+00
491
492
493
494
495+00
496
497
498

SHOULDER RUM STRIP 16
TR BAR TRM T1 SPL TAN
SPBGR TY A 6FT POSTS
TRAF BAR TERM T2
COMB CC&G TY B-6.24
AGG BASE CSE B4
CURVE 3
+90.00
AGG WEDGE SHLD TYPE B
AGGREGATE SHLDS B 6
+25.14
P SC SMA 12.5 E N80
P HMA BC SMA 12.5 N80
HMA SHOULDERS (5")
TR BAR TRM T1 SPL TAN
SPBGR TY A 6FT POSTS
TRAF BAR TERM T2
COMB CC&G TY B-6.24
AGG BASE CSE B4
+25.00
AGG WEDGE SHLD TYPE B
3'
10'
8'
12'
36'

MATCHLINE STA. 499+00.00

R
DECK
G
B

MODEL: I64_CL-11 [Sheet]
FILE NAME: S:\2021\21L007 - PTB 198-30 D8 - Willett Hofmann - Various Ph HIWO 4 I-64 Resurfacing\CADD\CADD Sheets\D876R99-sht-plan.dgn

QUIGG ENGINEERING INC

USER NAME = toverton	DESIGNED - RG	REVISED -	
	DRAWN - RG	REVISED -	
PLOT SCALE = 0.16666633 ' / In.	CHECKED - SMK	REVISED -	
PLOT DATE = 11/4/2024	DATE -	REVISED -	

STATE OF ILLINOIS
DEPARTMENT OF TRANSPORTATION

ROADWAY PLANS
I-64

SCALE: 1"=50' | SHEET 11 OF 31 SHEETS | STA. 484+00.00 | TO STA. 499+00.00

F.A.I RTE.	SECTION	COUNTY	TOTAL SHEETS	SHEET NO.
64	82-(4,5,6,7)-1RS-2	ST. CLAIR	388	81
		CONTRACT NO. 76R99		
	ILLINOIS	FED. AID PROJECT		

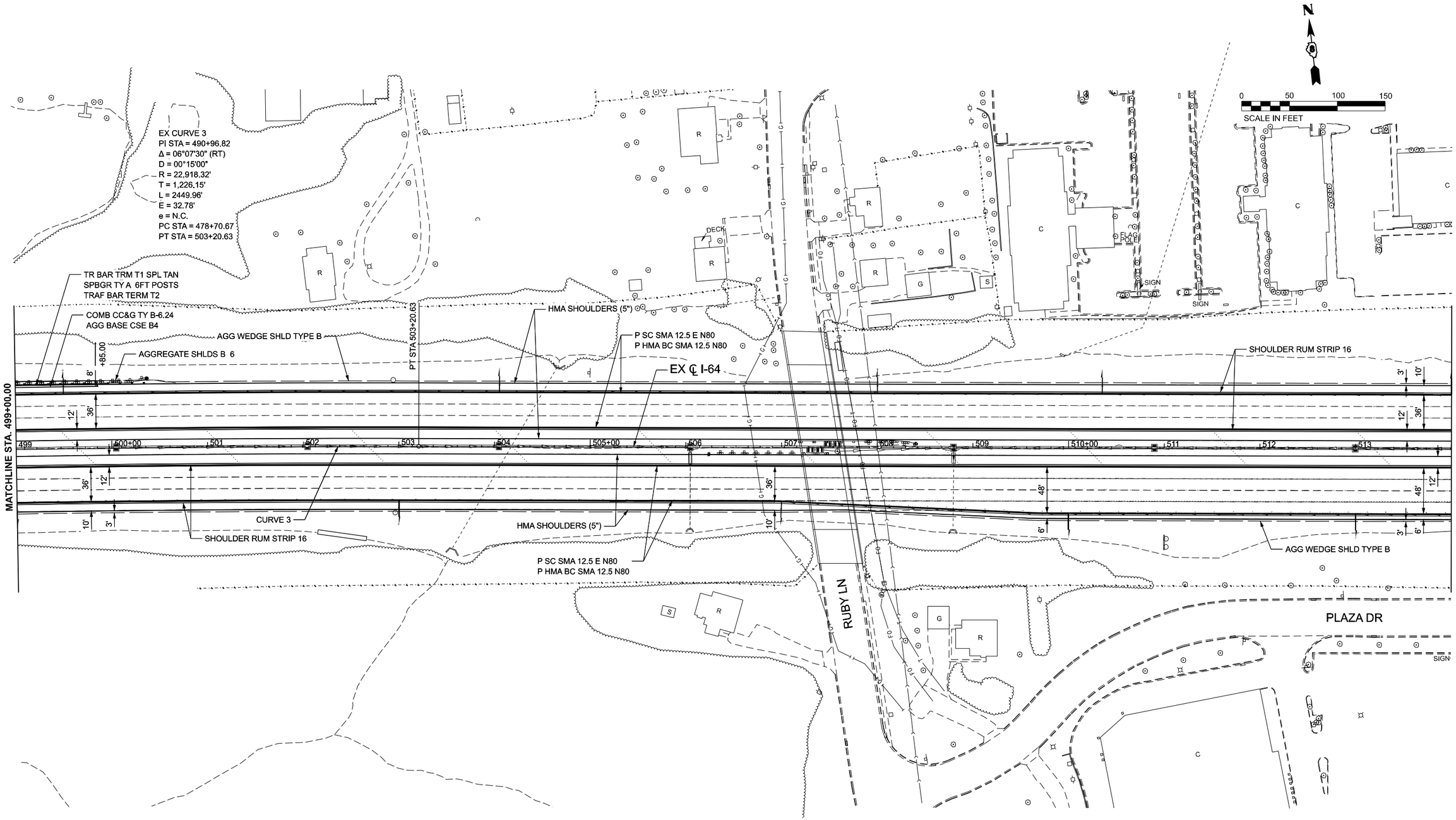

MODEL: I64_CL-12 [Sheet]
FILE NAME: S:\2021\21IL007 - PTB 198-30 D8 - Willett Hofmann - Various Ph I-II\WO 4 I-64 Resurfacing\CADD\CADD Sheets\D876R99-sht-plan.dgn

QUIGG ENGINEERING INC

USER NAME = toverton	DESIGNED - RG	REVISED -	
	DRAWN - RG	REVISED -	
PLOT SCALE = 0.16666633 ' / in.	CHECKED - SMK	REVISED -	
PLOT DATE = 11/4/2024	DATE -	REVISED -	

STATE OF ILLINOIS
DEPARTMENT OF TRANSPORTATION

ROADWAY PLANS
I-64

SCALE: 1"=50' | SHEET 12 OF 31 SHEETS | STA. 499+00.00 TO STA. 514+00.00

F.A.I RTE.	SECTION	COUNTY	TOTAL SHEETS	SHEET NO.
64	82-(4,5,6,7)-1RS-2	ST. CLAIR	388	82
		CONTRACT NO. 76R99		
		ILLINOIS	FED. AID PROJECT	

N

0 50 100 150
SCALE IN FEET

EX CURVE #2 IL 159 RAMP A
PI STA = 9+95.35
Δ = 35°31'32" (RT)
D = 07°29'23"
R = 765.00'
T = 245.07'
L = 474.33'
E = 38.30'
e = ____
PC STA = 7+50.29
PT STA = 12+24.62

MATCHLINE STA. 514+00.00

MATCHLINE STA. 529+00.00

SIGN
SIGN
TOWER
SIGN

POT STA 22+70.64
SHOULDER RUM STRIP 16
P SC SMA 12.5 E N80
P HMA BC SMA 12.5 N80
HMA SHOULDERS (5")
AGG WEDGE SHLD TYPE B
EX ℄ I-64
+14.91
EX ℄ IL 159 RAMP A
CLASS B PATCHES, TYPE II, 15 INCH
EXACT LOCATION TO BE DETERMINED
DURING CONSTRUCTION
PT STA 12+24.62
CURVE #2 IL 159 RAMP A
SHOULDER RUM STRIP 16
AGG WEDGE SHLD TYPE B
HMA SHOULDERS (5")
P SC SMA 12.5 E N80
P HMA BC SMA 12.5 N80
POT STA 22+70.32
PI STA 9+95.35
+64.58

SHOULDER RUM STRIP 16
P SC SMA 12.5 E N80
P HMA BC SMA 12.5 N80
HMA SHOULDERS (5")
POT STA 0+00.00
AGG WEDGE SHLD TYPE B
+14.09
EX ℄ IL 159 RAMP B
PC STA 6+62.42
+42.70
PI STA 9+40.06
CURVE #1 IL 159 RAMP B
HMA SHOULDERS (5")
AGG WEDGE SHLD TYPE B
P SC SMA 12.5 E N80
P HMA BC SMA 12.5 N80

PLAZA DR

SIGN
SIGN
SIGN
SIGN

EX CURVE #1 IL 159 RAMP B
PI STA = 9+40.06
Δ = 40°08'07" (RT)
D = 07°32'20"
R = 760.00'
T = 277.63'
L = 532.37'
E = 49.12'
e = ____
PC STA = 6+62.42
PT STA = 11+94.80

MODEL: I64_CL-13 [Sheet]
FILE NAME: S:\2021\21IL007 - PTB 198-30 D8 - Willett Hofmann - Various Ph III\WO 4 I-64 Resurfacing\CADD\CADD Sheets\D876f39-sht-plan.dgn

QUIGG ENGINEERING INC

USER NAME = toverton	DESIGNED - RG	REVISED -	
	DRAWN - RG	REVISED -	
PLOT SCALE = 0.16666633 ' / In.	CHECKED - SMK	REVISED -	
PLOT DATE = 11/22/2024	DATE - 12/02/2024	REVISED -	

STATE OF ILLINOIS
DEPARTMENT OF TRANSPORTATION

ROADWAY PLANS
I-64

SCALE: 1"=50' | SHEET 13 OF 31 SHEETS | STA. 514+00.00 | TO STA. 529+00.00

F.A.I RTE.	SECTION	COUNTY	TOTAL SHEETS	SHEET NO.
64	82-(4,5,6,7)-1RS-2	ST. CLAIR	388	83
		CONTRACT NO. 76R99		
	ILLINOIS FED. AID PROJECT			

EX CURVE #2 IL 159 RAMP A
PI STA = 9+95.35
Δ = 35°31'32" (RT)
D = 07°29'23"
R = 765.00'
T = 245.07'
L = 474.33'
E = 38.30'
e = ____
PC STA = 7+50.29
PT STA = 12+24.62

EX CURVE #2 IL 159 RAMP D
PI STA = 6+24.43
Δ = 230°09'28" (RT)
D = 30°57'58"
R = 185.03'
T = 395.37'
L = 743.26'
E = 251.50'
e = ____
PC STA = 2+29.06
PT STA = 9+72.32

EX CURVE #3 IL 159 RAMP D
PI STA = 10+45.88
Δ = 24°54'29" (RT)
D = 17°12'10"
R = 333.06'
T = 73.56'
L = 144.79'
E = 8.03'
e = ____
PC STA = 9+72.32
PT STA = 11+17.11

EX CURVE #2 IL 159 RAMP F
PI STA = 9+25.01
Δ = 38°54'20" (RT)
D = 07°23'35"
R = 775.00'
T = 273.72'
L = 526.25'
E = 46.92'
e = ____
PC STA = 6+51.28
PT STA = 11+77.53

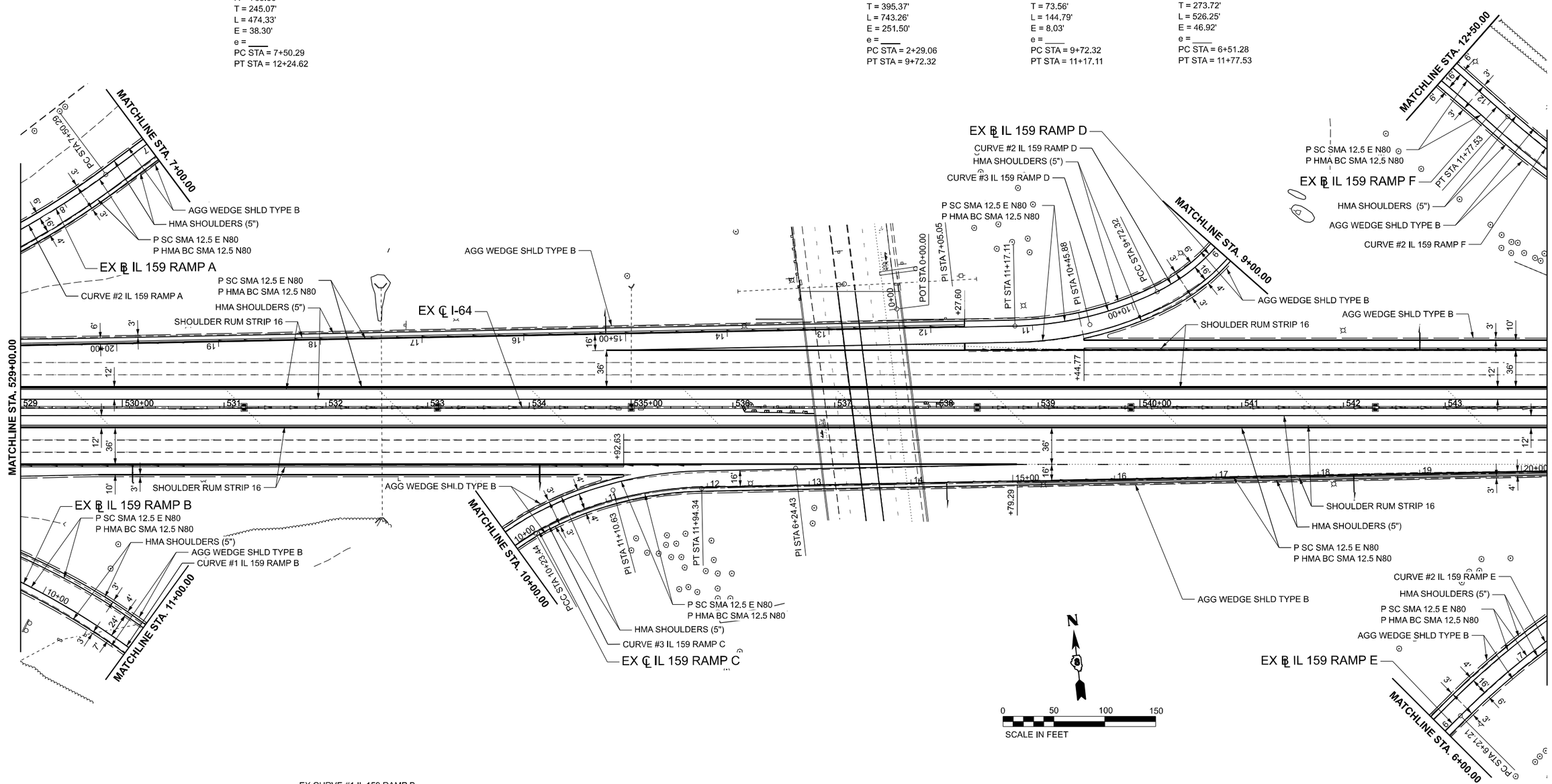

EX CURVE #1 IL 159 RAMP B
PI STA = 9+40.06
Δ = 40°08'07" (RT)
D = 07°32'20"
R = 760.00'
T = 277.63'
L = 532.37'
E = 49.12'
e = ____
PC STA = 6+62.42
PT STA = 11+94.80

EX CURVE #3 IL 159 RAMP C
PI STA = 11+10.63
Δ = 27°58'39" (RT)
D = 16°22'13"
R = 350.00'
T = 87.19'
L = 170.90'
E = 10.70'
e = ____
PC STA = 10+23.44
PT STA = 11+94.34

EX CURVE #2 IL 159 RAMP E
PI STA = 9+28.08
Δ = 43°46'13" (RT)
D = 07°30'00"
R = 763.94'
T = 306.87'
L = 583.60'
E = 59.33'
e = ____
PC STA = 6+21.21
PT STA = 12+04.81

MODEL: I64_CL-14 [Sheet]
FILE NAME: S:\2021\21L007 - PTB 198-30 D8 - Willett Hofmann - Various Ph I-IIWO 4 I-64 Resurfacing\CADD\CADD Sheets\D876R99-sht-plan.dgn

QUIGG ENGINEERING INC

USER NAME = toverton	DESIGNED - RG	REVISED -	
	DRAWN - RG	REVISED -	
PLOT SCALE = 0.16666633 ' / in.	CHECKED - SMK	REVISED -	
PLOT DATE = 11/27/2024	DATE - 12/02/2024	REVISED -	

STATE OF ILLINOIS
DEPARTMENT OF TRANSPORTATION

ROADWAY PLANS
I-64

SCALE: 1"=50' | SHEET 14 OF 31 SHEETS | STA. 529+00.00 | TO STA. 544+00.00

F.A.I RTE.	SECTION	COUNTY	TOTAL SHEETS	SHEET NO.
64	82-(4,5,6,7)-1RS-2	ST. CLAIR	388	84
		CONTRACT NO. 76R99		
	ILLINOIS	FED. AID PROJECT		

EX CURVE #1 IL 159 RAMP F
PI STA = 2+37.29
Δ = 04°47'52" (RT)
D = 01°00'42"
R = 5,664.07'
T = 237.29'
L = 474.30'
E = 4.97'
e = ____
PC STA = 0+00.00
PT STA = 4+74.30

EX CURVE #2 IL 159 RAMP F
PI STA = 9+25.01
Δ = 38°54'20" (RT)
D = 07°23'35"
R = 775.00'
T = 273.72'
L = 526.25'
E = 46.92'
e = ____
PC STA = 6+51.28
PT STA = 11+77.53

EX CURVE 4
PI STA = 554+07.09
Δ = 08°13'27" (LT)
D = 01°00'00"
R = 5,729.58'
T = 411.92'
L = 822.42'
E = 14.79'
e = 2.8%
PC STA = 549+95.17
PT STA = 558+17.60

N

0 50 100 150
SCALE IN FEET

P SC SMA 12.5 E N80
P HMA BC SMA 12.5 N80
CURVE #2 IL 159 RAMP F
EX ℄ IL 159 RAMP F
AGG WEDGE SHLD TYPE B
HMA SHOULDERS (5")
SHOULDER RUM STRIP 16
SALEM PL
CURVE #1 IL 159 RAMP F
CURVE 4
EX ℄ I-64
ETHAN ALLEN FURNITURE STORE
FLAG POLE
SIGN
MATCHLINE STA. 544+00.00
MATCHLINE STA. 559+00.00
PC STA 549+95.17
PT STA 4+74.30
PC STA 6+51.28
PI STA 9+25.01
PI STA 2+37.29
POT STA 0+00.00
PT STA 558+17.60
+50.00
+63.09
+36.26
POT STA 23+90.97
PT STA 12+04.81
PC STA 13+75.88
+38.71
PI STA 554+07.09
PI STA 18+18.07
CURVE #3 IL 159 RAMP E
P SC SMA 12.5 E N80
P HMA BC SMA 12.5 N80
AGG WEDGE SHLD TYPE B
HMA SHOULDERS (5")
EX ℄ IL 159 RAMP E
PI STA 9+28.08
POT STA 22+58.57
PLAZA DR
WATER TOWER

EX CURVE #2 IL 159 RAMP E
PI STA = 9+28.08
Δ = 43°46'13" (RT)
D = 07°30'00"
R = 763.94'
T = 306.87'
L = 583.60'
E = 59.33'
e = ____
PC STA = 6+21.21
PT STA = 12+04.81

EX CURVE #3 IL 159 RAMP E
PI STA = 18+18.07
Δ = 08°40'18" (LT)
D = 00°58'57"
R = 5,832.12'
T = 442.19'
L = 882.69'
E = 16.74'
e = ____
PC STA = 13+75.88
PT STA = 22+58.57

MODEL: I64_CL-15 [Sheet]
FILE NAME: S:\2021\21IL007 - PTB 198-30 D8 - Willett Hofmann - Various Ph II\WO 4 I-64 Resurfacing\CADD\CADD Sheets\D87ER99-int-plan.dgn

QUIGG ENGINEERING INC

USER NAME = toverton	DESIGNED - RG	REVISED -	
	DRAWN - RG	REVISED -	
PLOT SCALE = 0.16666633 ' / In.	CHECKED - SMK	REVISED -	
PLOT DATE = 11/5/2024	DATE -	REVISED -	

STATE OF ILLINOIS
DEPARTMENT OF TRANSPORTATION

ROADWAY PLANS
I-64

SCALE: 1"=50' | SHEET 15 OF 31 SHEETS | STA. 544+00.00 | TO STA. 559+00.00

F.A.I RTE.	SECTION	COUNTY	TOTAL SHEETS	SHEET NO.
64	82-(4,5,6,7)-1RS-2	ST. CLAIR	388	85
		CONTRACT NO. 76R99		
	ILLINOIS FED. AID PROJECT			

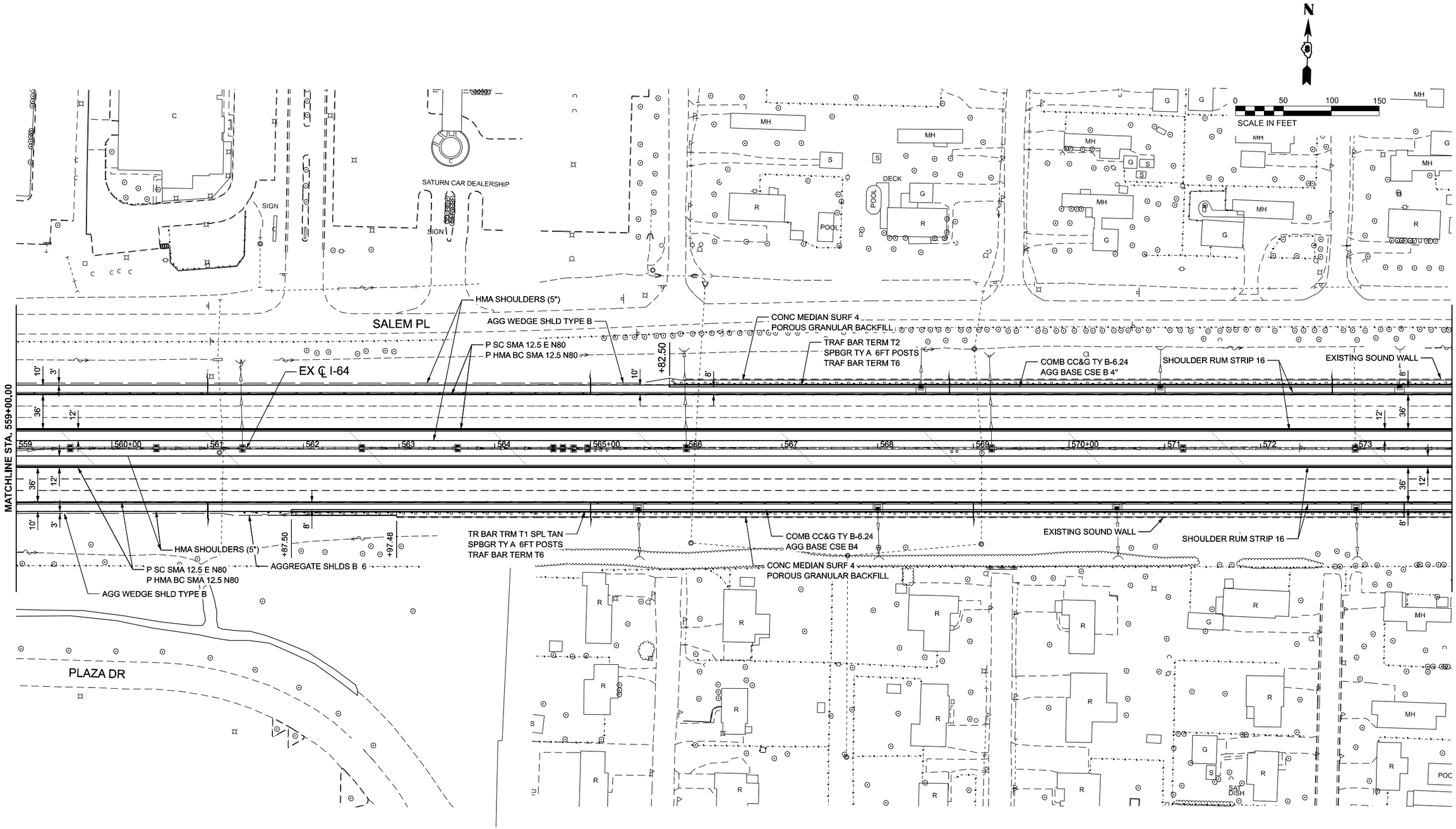

MODEL: I64_CL-16 [Sheet]
FILE NAME: S:\2021\21L007 - PTB 198-30 D8 - Willett Hofmann - Various Ph II\WO 4 I-64 Resurfacing\CADD\CADD Sheets\D876R99-sht-plan.dgn

QUIGG ENGINEERING INC	USER NAME = toverton	DESIGNED - RG	REVISED -	**STATE OF ILLINOIS** **DEPARTMENT OF TRANSPORTATION**
		DRAWN - RG	REVISED -	
	PLOT SCALE = 0.16666633 ' / In.	CHECKED - SMK	REVISED -	
	PLOT DATE = 11/4/2024	DATE -	REVISED -	

ROADWAY PLANS
I-64

SCALE: 1"=50' | SHEET 16 OF 31 SHEETS | STA. 559+00.00 | TO STA. 574+00.00

F.A.I RTE.	SECTION	COUNTY	TOTAL SHEETS	SHEET NO.
64	82-(4,5,6,7)-1RS-2	ST. CLAIR	388	86
		CONTRACT NO. 76R99		
	ILLINOIS FED. AID PROJECT			

N

0 50 100 150
SCALE IN FEET

SALEM PL

CONC MEDIAN SURF 4
POROUS GRANULAR BACKFILL

P SC SMA 12.5 E N80
P HMA BC SMA 12.5 N80

EXISTING SOUND WALL

EX ℄ I-64

TRAF BAR TERM T2
SPBGR TY A 6FT POSTS
TRAF BAR TERM T6

COMB CC&G TY B-6.24
AGG BASE CSE B4

SHOULDER RUM STRIP 16

PC STA 587+67.67

MATCHLINE STA. 574+00.00

MATCHLINE STA. 589+00,00

574 575+00 576 577 578 579 580+00 581 582 583 584 585+00 586 587 588

8' 12' 36'

SHOULDER RUM STRIP 16

CONC MEDIAN SURF 4
POROUS GRANULAR BACKFILL

P SC SMA 12.5 E N80
P HMA BC SMA 12.5 N80

EXISTING SOUND WALL

TR BAR TRM T1 SPL TAN
SPBGR TY A 6FT POSTS
TRAF BAR TERM T6

COMB CC&G TY B-6.24
AGG BASE CSE B4

EX CURVE 5
PI STA = 596+66.11
Δ = 17°49'25" (RT)
D = 01°00'00"
R = 5,729.58'
T = 898.44'
L = 1782.37'
E = 70.01'
e = 2.8%
PC STA = 587+67.67
PT STA = 605+50.04

CURVE 5

MODEL: I64_CL-17 [Sheet]
FILE NAME: S:\2021\21IL007 - PTB 198-30 D8 - Willett Hofmann - Various Ph I-IIWO 4 I-64 Resurfacing\CADD\CADD Sheets\D87R99-sht-plan.dgn

QUIGG ENGINEERING INC

USER NAME = toverton	DESIGNED - RG	REVISED -	
	DRAWN - RG	REVISED -	
PLOT SCALE = 0.16666633 ' / in.	CHECKED - SMK	REVISED -	
PLOT DATE = 11/4/2024	DATE -	REVISED -	

STATE OF ILLINOIS
DEPARTMENT OF TRANSPORTATION

ROADWAY PLANS
I-64

SCALE: 1"=50' | SHEET 17 OF 31 SHEETS | STA. 574+00.00 | TO STA. 589+00.00

F.A.I RTE.	SECTION	COUNTY	TOTAL SHEETS	SHEET NO.
64	82-(4,5,6,7)-1RS-2	ST. CLAIR	388	87
		CONTRACT NO. 76R99		
	ILLINOIS	FED. AID PROJECT		

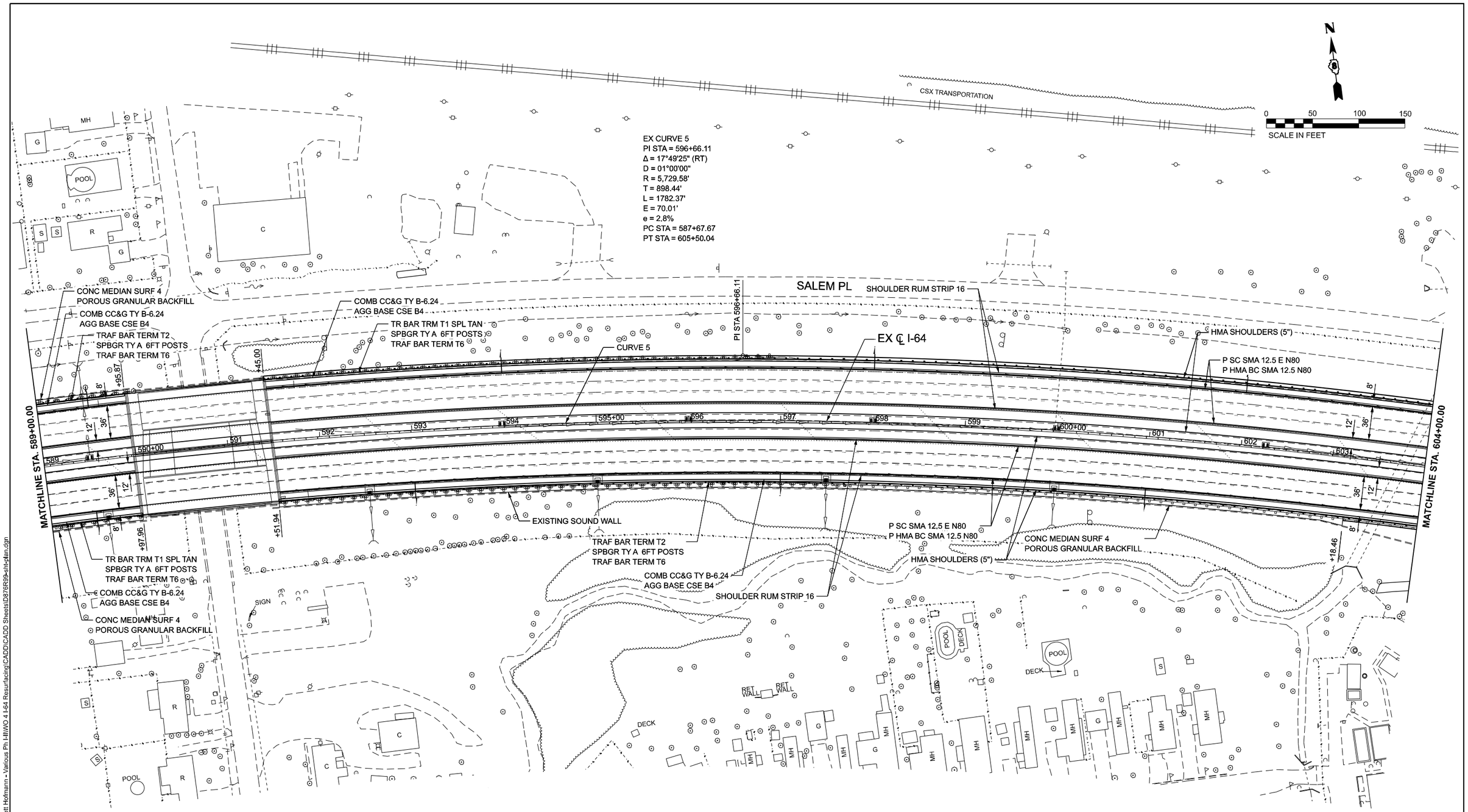

MODEL: I64_CL-18 [Sheet]
FILE NAME: S:\2021\21L007 - PTB 199-30 D8 - Willett Hofmann - Various Ph II\WO 4 I-64 Resurfacing\CADD\CADD Sheets\D876R99-sht-plan.dgn

QUIGG ENGINEERING INC

USER NAME = toverton	DESIGNED - RG	REVISED -	
	DRAWN - RG	REVISED -	
PLOT SCALE = 0.16666633 ' / In.	CHECKED - SMK	REVISED -	
PLOT DATE = 11/4/2024	DATE -	REVISED -	

STATE OF ILLINOIS
DEPARTMENT OF TRANSPORTATION

ROADWAY PLANS
I-64

SCALE: 1"=50' | SHEET 18 OF 31 SHEETS | STA. 589+00.00 | TO STA. 604+00.00

F.A.I RTE.	SECTION	COUNTY	TOTAL SHEETS	SHEET NO.
64	82-(4,5,6,7)-1RS-2	ST. CLAIR	388	88
		CONTRACT NO. 76R99		
	ILLINOIS FED. AID PROJECT			

EX CURVE 5
PI STA = 596+66.11
Δ = 17°49'25" (RT)
D = 01°00'00"
R = 5,729.58'
T = 898.44'
L = 1782.37'
E = 70.01'
e = 2.8%
PC STA = 587+67.67
PT STA = 605+50.04

CSX TRANSPORTATION

N

0 50 100 150
SCALE IN FEET

COMB CC&G TY B-6.24
AGG BASE CSE B4
TR BAR TRM T1 SPL TAN
SPBGR TY A 6FT POSTS
TRAF BAR TERM T6

SALEM PL

SIGN
SIGN

PT STA 605+50.04
AGGREGATE SHLDS B 6
AGG WEDGE SHLD TYPE B
P SC SMA 12.5 E N80
P HMA BC SMA 12.5 N80
HMA SHOULDERS (5")
SHOULDER RUM STRIP 16
EX ℄ I-64
PI STA 643+81.59

MATCHLINE STA. 604+00.00

604 605+00 606 607 608 609 610+00 611 612 613 614 615+00 616 617 618 644

MATCHLINE STA. 644+64.42

8' 3' 36' 12' +45.06

CURVE 5
+75.00
AGG WEDGE SHLD TYPE B
HMA SHOULDERS (5")
P SC SMA 12.5 E N80
P HMA BC SMA 12.5 N80
SHOULDER RUM STRIP 16
EQN: STA 618+17.17 BK = STA 643+81.59 AH

TRAF BAR TERM T2
SPBGR TY A 6FT POSTS
TRAF BAR TERM T6
COMB CC&G TY B-6.24
AGG BASE CSE B4
EXISTING SOUND WALL

SIGN

MODEL: I64_CL-19 [Sheet]
FILE NAME: S:\2021\21L007 - PTB 199-30 D8 - Willett Hofmann - Various Ph HIWO 4 I-64 Resurfacing\CADD\CADD Sheets\D876R99-sht-plan.dgn

QUIGG ENGINEERING INC

USER NAME = toverton	DESIGNED - RG	REVISED -	
	DRAWN - RG	REVISED -	
PLOT SCALE = 0.16666633 ' / in.	CHECKED - SMK	REVISED -	
PLOT DATE = 11/4/2024	DATE -	REVISED -	

STATE OF ILLINOIS
DEPARTMENT OF TRANSPORTATION

ROADWAY PLANS
I-64

SCALE: 1"=50' | SHEET 19 OF 31 SHEETS | STA. 604+00.00 | TO STA. 644+64.42 R2

F.A.I RTE.	SECTION	COUNTY	TOTAL SHEETS	SHEET NO.
64	82-(4,5,6,7)-1RS-2	ST. CLAIR	388	89
		CONTRACT NO. 76R99		
	ILLINOIS	FED. AID PROJECT		

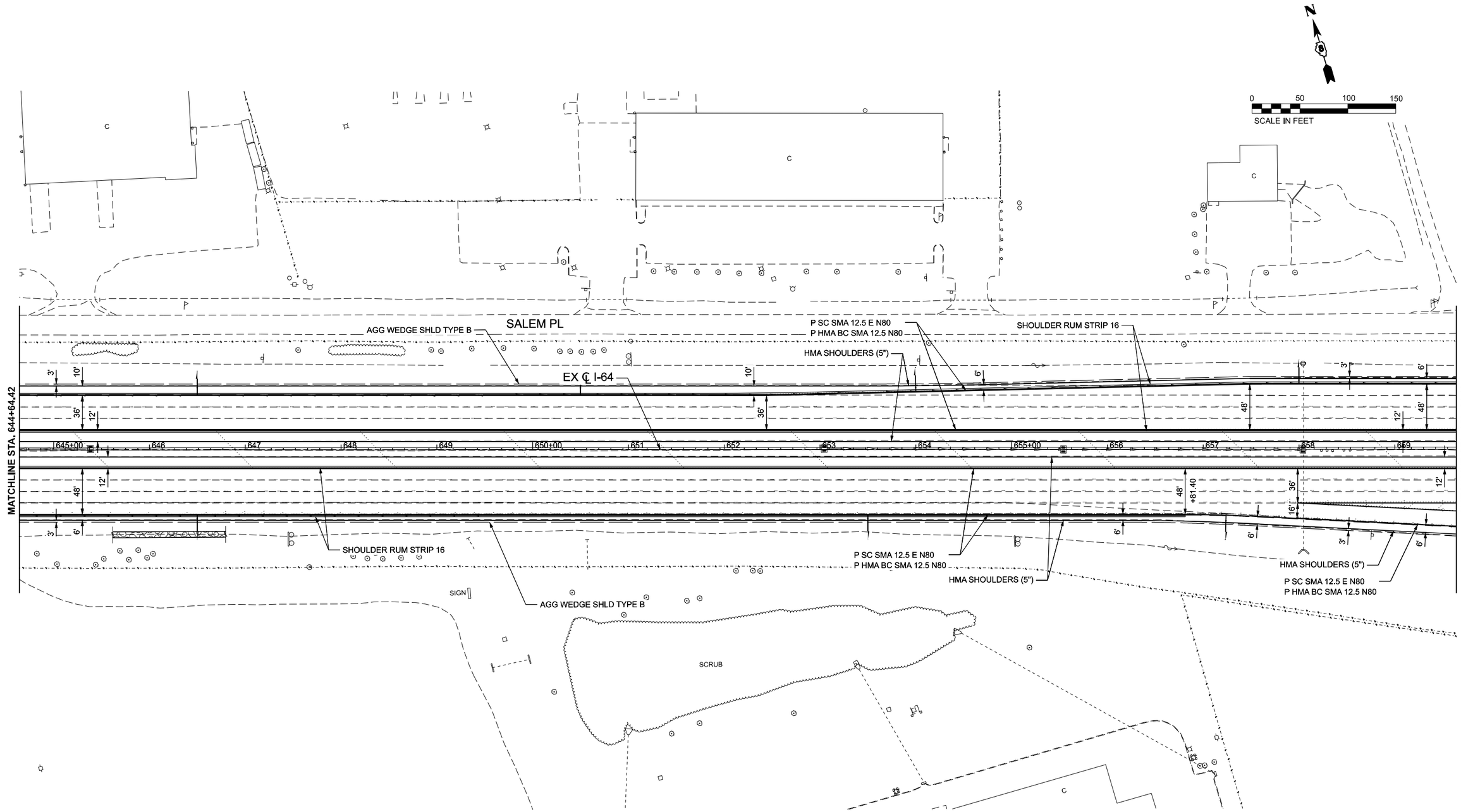

MODEL: I64_CL-20 [Sheet]
FILE NAME: S:\2021\21IL007 - PTB 198-30 D8 - Willett Hofmann - Various Ph III\WO 4 I-64 Resurfacing\CADD\CADD Sheets\D876R99-sht-plan.dgn

QUIGG ENGINEERING INC

USER NAME = toverton	DESIGNED - RG	REVISED -	
	DRAWN - RG	REVISED -	
PLOT SCALE = 0.16666633 ' / in.	CHECKED - SMK	REVISED -	
PLOT DATE = 11/4/2024	DATE -	REVISED -	

STATE OF ILLINOIS
DEPARTMENT OF TRANSPORTATION

ROADWAY PLANS
I-64

SCALE: 1"=50' | SHEET 20 OF 31 SHEETS | STA. 644+64.42 R2 | TO STA. 659+64.42 R2

F.A.I RTE.	SECTION	COUNTY	TOTAL SHEETS	SHEET NO.
64	82-(4,5,6,7)-1RS-2	ST. CLAIR	388	90
		CONTRACT NO. 76R99		
	ILLINOIS FED. AID PROJECT			

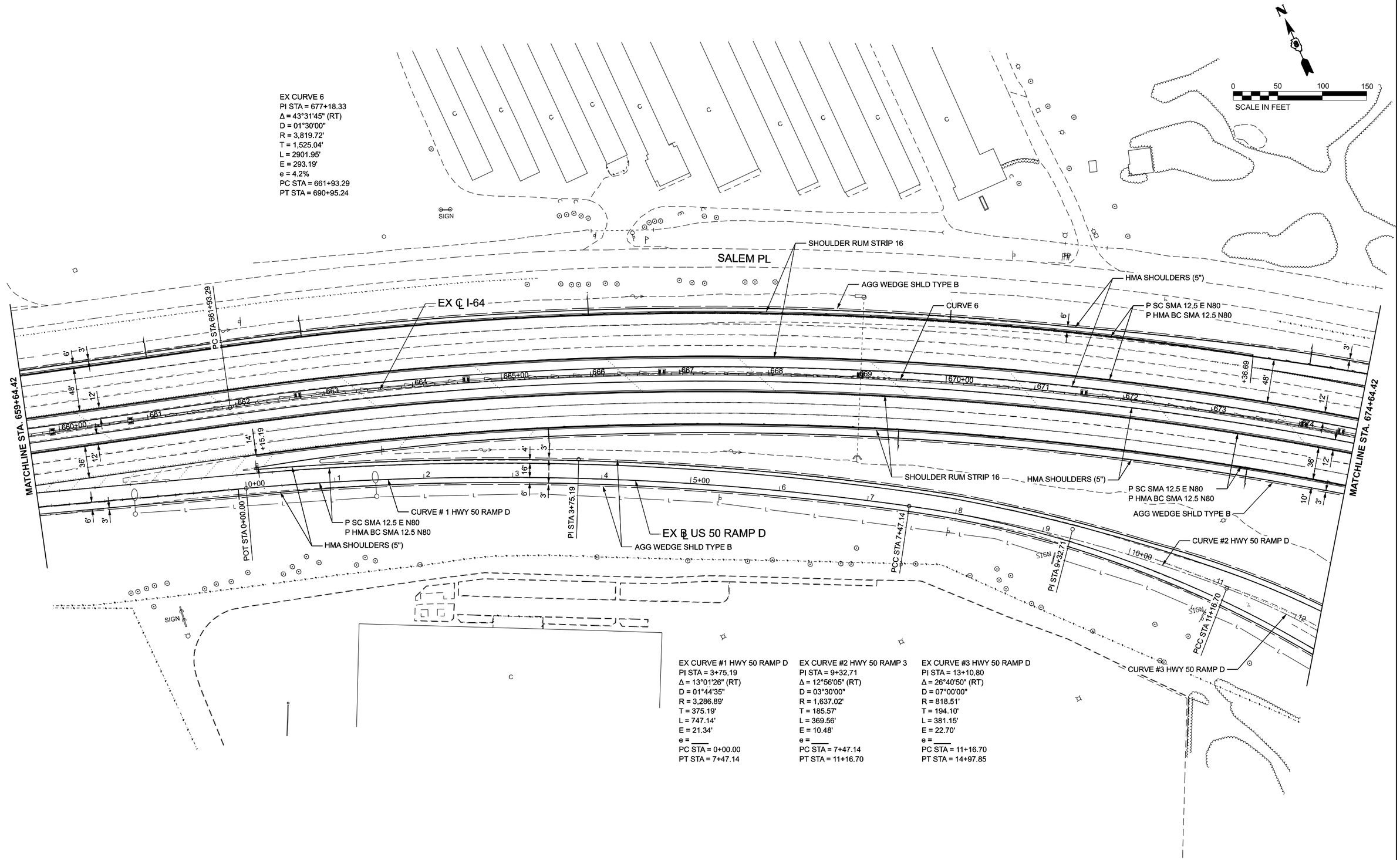

EX CURVE #1 HWY 50 RAMP D
PI STA = 3+75.19
Δ = 13°01'26" (RT)
D = 01°44'35"
R = 3,286.89'
T = 375.19'
L = 747.14'
E = 21.34'
e = ____
PC STA = 0+00.00
PT STA = 7+47.14

EX CURVE #2 HWY 50 RAMP 3
PI STA = 9+32.71
Δ = 12°56'05" (RT)
D = 03°30'00"
R = 1,637.02'
T = 185.57'
L = 369.56'
E = 10.48'
e = ____
PC STA = 7+47.14
PT STA = 11+16.70

EX CURVE #3 HWY 50 RAMP D
PI STA = 13+10.80
Δ = 26°40'50" (RT)
D = 07°00'00"
R = 818.51'
T = 194.10'
L = 381.15'
E = 22.70'
e = ____
PC STA = 11+16.70
PT STA = 14+97.85

MODEL: I64_CL-21 [Sheet]
FILE NAME: S:\2021\21IL007 - PTB 198-30 D8 - Willett Hofmann - Various Ph I-II\WO 4 I-64 Resurfacing\CADD\CADD Sheets\D876R99-sht-plan.dgn

QUIGG ENGINEERING INC

USER NAME = toverton	DESIGNED - RG	REVISED -	
	DRAWN - RG	REVISED -	
PLOT SCALE = 0.16666633 ' / in.	CHECKED - SMK	REVISED -	
PLOT DATE = 11/4/2024	DATE -	REVISED -	

STATE OF ILLINOIS
DEPARTMENT OF TRANSPORTATION

ROADWAY PLANS
I-64

SCALE: 1"=50' | SHEET 21 OF 31 SHEETS | STA. 659+64.42 R2 TO STA. 674+64.42 R2

F.A.I RTE.	SECTION	COUNTY	TOTAL SHEETS	SHEET NO.
64	82-(4,5,6,7)-1RS-2	ST. CLAIR	388	91
		CONTRACT NO. 76R99		
		ILLINOIS	FED. AID PROJECT	

EX CURVE #2 HWY 50 RAMP C
PI STA = 11+39.72
Δ = 26°39'44" (RT)
D = 08°18'13"
R = 690.00'
T = 163.50'
L = 321.09'
E = 19.11'
e = ____
PC STA = 9+76.21
PT STA = 12+97.30

EX CURVE 6
PI STA = 677+18.33
Δ = 43°31'45" (RT)
D = 01°30'00"
R = 3,819.72'
T = 1,525.04'
L = 2901.95'
E = 293.19'
e = 4.2%
PC STA = 661+93.29
PT STA = 690+95.24

EX CURVE #3 HWY 50 RAMP D
PI STA = 13+10.80
Δ = 26°40'50" (RT)
D = 07°00'00"
R = 818.51'
T = 194.10'
L = 381.15'
E = 22.70'
e = ____
PC STA = 11+16.70
PT STA = 14+97.85

END IMPROVEMENT
STA 13+44.03

SCALE IN FEET: 0 50 100 150

MATCHLINE STA. 674+64.42

MATCHLINE STA. 689+64.42

QUIGG ENGINEERING INC	USER NAME = rgoertz	DESIGNED - RG	REVISED -	
		DRAWN - RG	REVISED -	
	PLOT SCALE = 0.16666833 ' / in.	CHECKED - SMK	REVISED -	
	PLOT DATE = 11/25/2024	DATE - 12/02/2024	REVISED -	

STATE OF ILLINOIS
DEPARTMENT OF TRANSPORTATION

ROADWAY PLANS
I-64

SCALE: 1"=50' | SHEET 22 OF 31 SHEETS | STA. 674+64.42 R2 | TO STA. 689+64.42 R2

F.A.I RTE.	SECTION	COUNTY	TOTAL SHEETS	SHEET NO.
64	82-(4,5,6,7)-1RS-2	ST. CLAIR	388	92
		CONTRACT NO. 76R99		
	ILLINOIS FED. AID PROJECT			

MODEL: I64_CL-22 [Sheet]
FILE NAME: S:\2021\21IL007 - PTB 198-30 D8 - Willett Hofmann - Various Ph I-IIWO 4 I-64 Resurfacing\CADD\CADD Sheets\D876R99-sht-plan.dgn

END IMPROVEMENT
STA 5+49.31

N

0 50 100 150
SCALE IN FEET

EX CURVE 6
PI STA = 677+18.33
Δ = 43°31'45" (RT)
D = 01°30'00"
R = 3,819.72'
T = 1,525.04'
L = 2901.95'
E = 293.19'
e = 4.2%
PC STA = 661+93.29
PT STA = 690+95.24

EX CURVE #1 HWY 50 RAMP B
PI STA = 2+00.50
Δ = 29°11'26" (RT)
D = 07°26'28"
R = 770.00'
T = 200.50'
L = 392.29'
E = 25.68'
e = ____
PC STA = 0+00.00
PT STA = 3+92.29

EX ℄ US 50 RAMP B
AGG WEDGE SHLD TYPE B
P SC SMA 12.5 E N80
P HMA BC SMA 12.5 N80
PT STA 3+92.29
PI STA 2+00.50
POT STA 0+00.00
CURVE 6
CURVE #1 HWY 50 RAMP B
SHOULDER RUM STRIP 16
HMA SHOULDERS (5")
SHOULDER RUMBLE STRIP 16
EX ℄ I-64
PT STA 690+95.24
MATCHLINE STA. 689+64.42
MATCHLINE STA. 704+64.42
+33.59
+94.19
+06.93
PT STA 15+07.55
POT STA 17+08.23
+94.03
MATCHLINE STA. 11+00.00
PT STA 12+29.20
EX ℄ US 50 RAMP A
CURVE #2 HWY 50 RAMP A

EX CURVE #2 HWY 50 RAMP A
PI STA = 12+29.20
Δ = 50°10'21" (RT)
D = 08°23'20"
R = 683.00'
T = 319.74'
L = 598.09'
E = 71.14'
e = ____
PC STA = 9+09.46
PT STA = 15+07.55

MODEL: I64_CL-23 [Sheet]
FILE NAME: S:\2021\21L007 - PTB 198-30 D8 - Willett Hofmann - Various Ph HIWO 4 I-64 Resurfacing\CADD\CADD Sheets\D876R99-sht-plan.dgn

QUIGG ENGINEERING INC

USER NAME = toverton	DESIGNED - RG	REVISED -	
	DRAWN - RG	REVISED -	
PLOT SCALE = 0.16666633 ' / in.	CHECKED - SMK	REVISED -	
PLOT DATE = 11/20/2024	DATE - 12/02/2024	REVISED -	

STATE OF ILLINOIS
DEPARTMENT OF TRANSPORTATION

ROADWAY PLANS
I-64

SCALE: 1"=50' | SHEET 23 OF 31 SHEETS | STA. 689+64.42 R2 | TO STA. 704+64.42 R2

F.A.I RTE.	SECTION	COUNTY	TOTAL SHEETS	SHEET NO.
64	82-(4,5,6,7)-1RS-2	ST. CLAIR	388	93
		CONTRACT NO. 76R99		
	ILLINOIS	FED. AID PROJECT		

N

0 50 100 150

SCALE IN FEET

REGENCY PARK

SIGN

DECK

SAT DISH

BRUSH PILE

MATCHLINE STA. 704+64.42

MATCHLINE STA. 719+64.42

AGG WEDGE SHLD TYPE B

EX ℄ I-64

P SC SMA 12.5 E N80
P HMA BC SMA 12.5 N80

HMA SHOULDERS (5")

SHOULDER RUM STRIP 16

705+00 706 707 708 709 710+00 711 712 713 714 715+00 716 717 718 719

3' 10' 12' 36'

MODEL: I64_CL-24 [Sheet]
FILE NAME: S:\2021\21L007 - PTB 198-30 D8 - Willett Hofmann - Various Ph HIWO 4 I-64 Resurfacing\CADD\CADD Sheets\D876R99-sht-plan.dgn

QUIGG ENGINEERING INC	USER NAME = toverton	DESIGNED - RG	REVISED -	**STATE OF ILLINOIS DEPARTMENT OF TRANSPORTATION**
		DRAWN - RG	REVISED -	
	PLOT SCALE = 0.16666633 ' / in.	CHECKED - SMK	REVISED -	
	PLOT DATE = 9/20/2024	DATE -	REVISED -	

ROADWAY PLANS
I-64

SCALE: 1"=50' | SHEET 24 OF 31 SHEETS | STA. 704+64.42 R2 | TO STA. 719+64.42 R2

F.A.I RTE.	SECTION	COUNTY	TOTAL SHEETS	SHEET NO.
64	82-(4,5,6,7)-1R-2	ST. CLAIR	388	94
		CONTRACT NO. 76R99		
	ILLINOIS	FED. AID PROJECT		

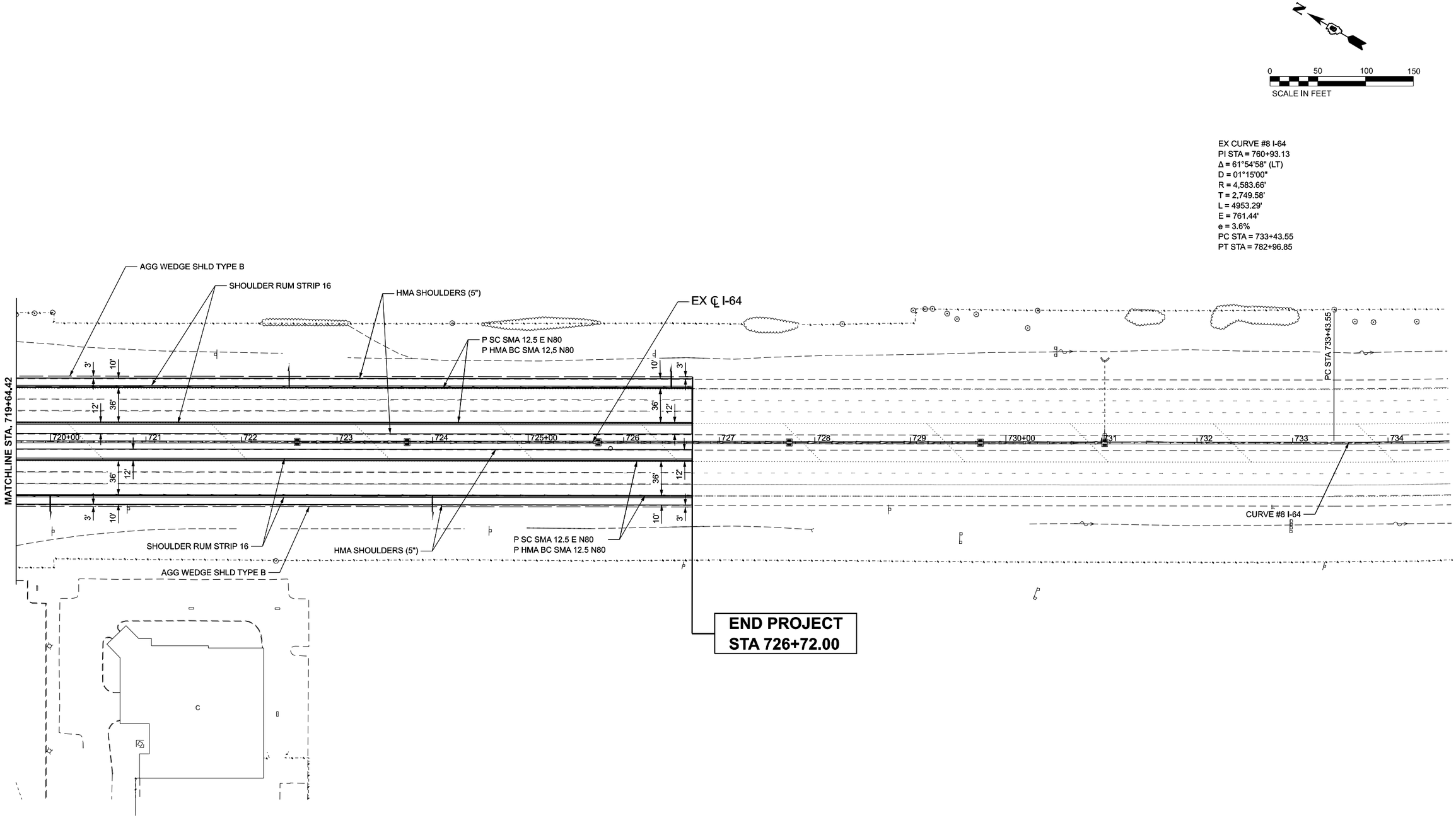

MODEL: I64_CL-25 [Sheet]
FILE NAME: S:\2021\21L007 - PTB 198-30 D8 - Willett Hofmann - Various Ph HIWO 4 I-64 Resurfacing\CADD\CADD Sheets\D876R99-sht-plan.dgn

QUIGG ENGINEERING INC

USER NAME = toverton		DESIGNED - RG	REVISED -	
		DRAWN - RG	REVISED -	
PLOT SCALE = 0.16666633 ' / in.		CHECKED - SMK	REVISED -	
PLOT DATE = 9/20/2024		DATE -	REVISED -	

STATE OF ILLINOIS
DEPARTMENT OF TRANSPORTATION

ROADWAY PLANS
I-64

SCALE: 1"=50' | SHEET 25 OF 31 SHEETS | STA. 719+64.42 R2 | TO STA. 734+64.42 R2

F.A.I RTE.	SECTION	COUNTY	TOTAL SHEETS	SHEET NO.
64	82-(4,5,6,7)-1R-2	ST. CLAIR	388	95
		CONTRACT NO. 76R99		
	ILLINOIS FED. AID PROJECT			

EX CURVE #2 IL 157 RAMP A
PI STA = 13+97.96
Δ = 51°35'32" (LT)
D = 08°18'13"
R = 690.00'
T = 333.50'
L = 621.31'
E = 76.37'
E = ____
PC STA = 10+64.46
PT STA = 16+85.77

EX CURVE #1 IL 157 RAMP A
PI STA = 6+85.86
Δ = 55°02'59" (LT)
D = 17°24'54"
R = 329.00'
T = 171.45'
L = 316.10'
E = 41.99'
E = ____
PC STA = 5+14.41
PT STA = 8+30.52

N

0 50 100 150
SCALE IN FEET

END IMPROVEMENT
STA 1+71.98 (RAMP A)
STA 17+31.03 (RAMP B)

EX CURVE #1 IL 157 RAMP B
PI STA = 2+87.41
Δ = 05°44'50" (RT)
D = 01°00'02"
R = 5,725.72'
T = 287.41'
L = 574.34'
E = 7.21'
E = ____
PC STA = 0+00.00
PT STA = 5+74.34

EX CURVE #2 IL 157 RAMP B
PI STA = 6+66.67
Δ = 24°55'32" (RT)
D = 13°42'52"
R = 417.78'
T = 92.33'
L = 181.75'
E = 10.08'
E = ____
PC STA = 5+74.34
PT STA = 7+56.09

EX CURVE #3 IL 157 RAMP B
PI STA = 17+22.37
Δ = 152°14'02" (RT)
D = 23°59'25"
R = 238.83'
T = 966.29'
L = 634.56'
E = 756.53'
E = ____
PC STA = 7+56.09
PT STA = 13+90.65

MODEL: IL 157 North [Sheet]
FILE NAME: S:\2021\21IL007 - PTB 198-30 D8 - Willett Hofmann - Various Ph II\WO 4 I-64 Resurfacing\CADD\CADD Sheets\D876R99-sht-plan.dgn

QUIGG ENGINEERING INC

USER NAME = toverton	DESIGNED - RG	REVISED -	
	DRAWN - RG	REVISED -	
PLOT SCALE = 0.16666633 ' / in.	CHECKED - SMK	REVISED -	
PLOT DATE = 11/27/2024	DATE - 12/02/2024	REVISED -	

STATE OF ILLINOIS
DEPARTMENT OF TRANSPORTATION

ROADWAY PLANS
IL 157 RAMPS

SCALE: 1"=50' | SHEET 26 OF 31 SHEETS | STA. | TO STA.

F.A.I RTE.	SECTION	COUNTY	TOTAL SHEETS	SHEET NO.
64	82-(4,5,6,7)-1RS-2	ST. CLAIR	388	96
		CONTRACT NO. 76R99		
	ILLINOIS FED. AID PROJECT			

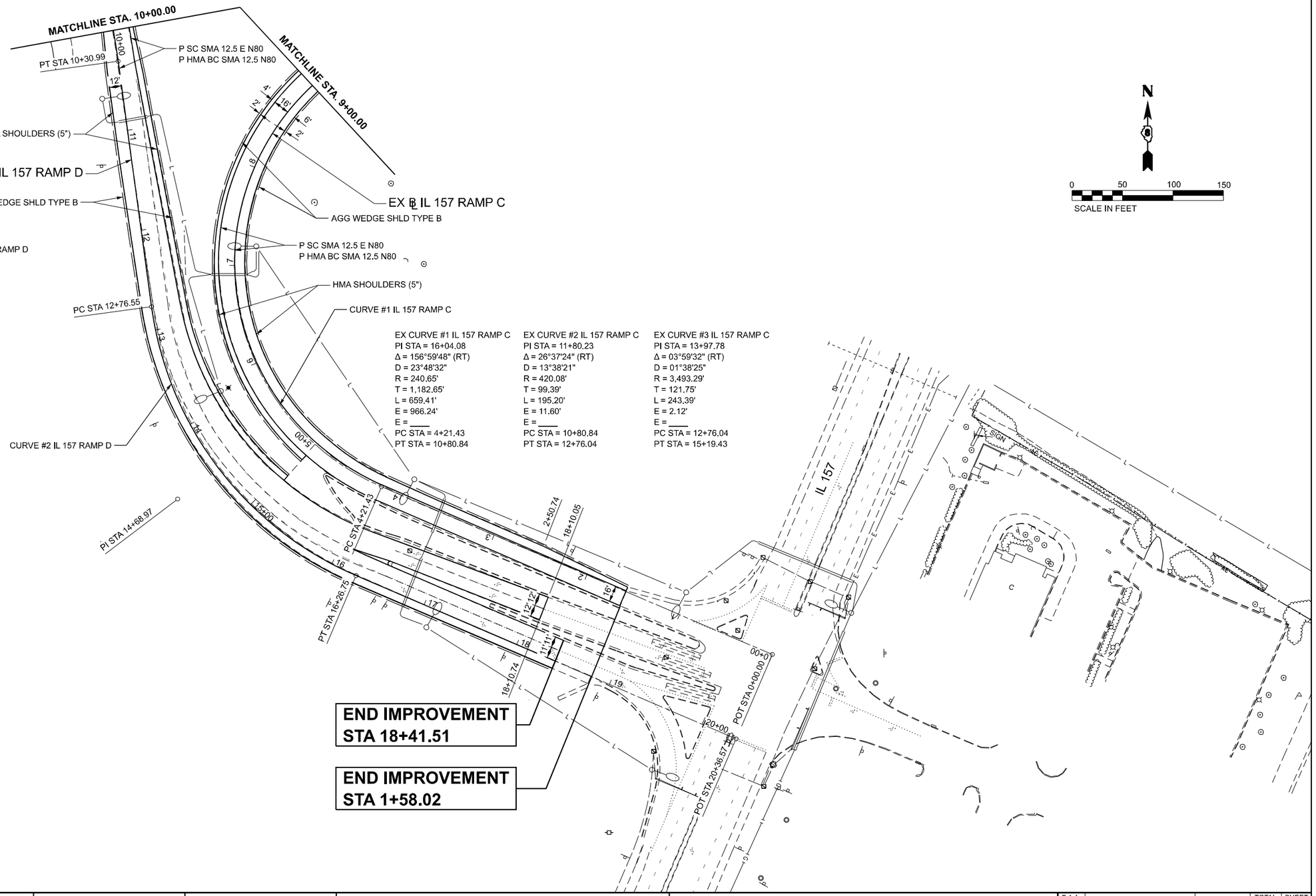

EX CURVE # 1 IL 157 RAMP D
PI STA = 7+54.95
Δ = 48°15'36" (RT)
D = 08°11'06"
R = 700.00'
T = 313.56'
L = 589.61'
E = 67.02'
e = ____
PC STA = 4+41.39
PT STA = 10+30.99

EX CURVE # 2 IL 157 RAMP D
PI STA = 14+68.97
Δ = 59°00'52" (LT)
D = 16°51'06"
R = 340.00'
T = 192.42'
L = 350.20'
E = 50.67'
e = ____
PC STA = 12+76.55
PT STA = 16+26.75

EX CURVE #1 IL 157 RAMP C
PI STA = 16+04.08
Δ = 156°59'48" (RT)
D = 23°48'32"
R = 240.65'
T = 1,182.65'
L = 659.41'
E = 966.24'
E = ____
PC STA = 4+21.43
PT STA = 10+80.84

EX CURVE #2 IL 157 RAMP C
PI STA = 11+80.23
Δ = 26°37'24" (RT)
D = 13°38'21"
R = 420.08'
T = 99.39'
L = 195.20'
E = 11.60'
E = ____
PC STA = 10+80.84
PT STA = 12+76.04

EX CURVE #3 IL 157 RAMP C
PI STA = 13+97.78
Δ = 03°59'32" (RT)
D = 01°38'25"
R = 3,493.29'
T = 121.75'
L = 243.39'
E = 2.12'
E = ____
PC STA = 12+76.04
PT STA = 15+19.43

END IMPROVEMENT STA 18+41.51

END IMPROVEMENT STA 1+58.02

MODEL: IL 157 South [Sheet]
FILE NAME: S:\2021\21IL007 - PTB 198-30 D8 - Willett Hofmann - Various Ph I-IIWO 4 I-64 Resurfacing\CADD\CADD Sheets\D876R99-sht-plan.dgn

QUIGG ENGINEERING INC

USER NAME = toverton	DESIGNED - RG	REVISED -	
	DRAWN - RG	REVISED -	
PLOT SCALE = 0.16666833 ' / in.	CHECKED - SMK	REVISED -	
PLOT DATE = 11/22/2024	DATE - 12/02/2024	REVISED -	

STATE OF ILLINOIS
DEPARTMENT OF TRANSPORTATION

ROADWAY PLANS
IL 157 RAMPS

SCALE: 1"=50' | SHEET 27 OF 31 SHEETS | STA. | TO STA.

F.A.I RTE.	SECTION	COUNTY	TOTAL SHEETS	SHEET NO.
64	82-(4,5,6,7)-1RS-2	ST. CLAIR	388	97
		CONTRACT NO. 76R99		
	ILLINOIS FED. AID PROJECT			

EX CURVE #2 IL 159 RAMP A
PI STA = 9+95.35
Δ = 35°31'32" (RT)
D = 07°29'23"
R = 765.00'
T = 245.07'
L = 474.33'
E = 38.30'
e = ____
PC STA = 7+50.29
PT STA = 12+24.62

EX CURVE #1 IL 159 RAMP A
PI STA = 3+89.19
Δ = 29°24'39" (LT)
D = 12°19'18"
R = 465.00'
T = 122.04'
L = 238.69'
E = 15.75'
e = ____
PC STA = 2+67.15
PT STA = 5+05.84

EX CURVE #3 IL 159 RAMP F
PI STA = 15+67.43
Δ = 48°27'18" (LT)
D = 16°22'13"
R = 350.00'
T = 157.50'
L = 296.00'
E = 33.80'
e = ____
PC STA = 14+09.94
PT STA = 17+05.93

EX CURVE #2 IL 159 RAMP F
PI STA = 9+25.01
Δ = 38°54'20" (RT)
D = 07°23'35"
R = 775.00'
T = 273.72'
L = 526.25'
E = 46.92'
e = ____
PC STA = 6+51.28
PT STA = 11+77.53

N

0 50 100 150
SCALE IN FEET

END IMPROVEMENT STA 0+95.94

END IMPROVEMENT STA 18+38.11

END IMPROVEMENT STA 2+60.57

EX ℄ IL 159 RAMP A
CURVE #1 IL 159 RAMP A
PI STA 3+89.19
PC STA 2+67.15
PT STA 5+05.84
+02.18
14.28' RT
+88.85
16.25' LT
HMA SHOULDERS (5")
P SC SMA 12.5 E N80
P HMA BC SMA 12.5 N80
AGG WEDGE SHLD TYPE B
MATCHLINE STA. 7+00.00

EX CURVE #1 IL 159 RAMP D
PI STA = 1+65.93
Δ = 20°54'11" (RT)
D = 16°22'13"
R = 350.00'
T = 64.56'
L = 127.69'
E = 5.90'
e = ____
PC STA = 1+01.37
PT STA = 2+29.06

EX CURVE #2 IL 159 RAMP D
PI STA = 6+24.43
Δ = 230°09'28" (RT)
D = 30°57'58"
R = 185.03'
T = 395.37'
L = 743.26'
E = 251.50'
e = ____
PC STA = 2+29.06
PT STA = 9+72.32

EX CURVE #3 IL 159 RAMP D
PI STA = 10+45.88
Δ = 24°54'29" (RT)
D = 17°12'10"
R = 333.06'
T = 73.56'
L = 144.79'
E = 8.03'
e = ____
PC STA = 9+72.32
PT STA = 11+17.11

IL 159
POT STA 19+57.28
POT STA 0+00.00
12" CMP

CURVE #3 IL 159 RAMP F
PT STA 17+05.93
PI STA 15+67.43
EX ℄ IL 159 RAMP F
P SC SMA 12.5 E N80
P HMA BC SMA 12.5 N80
PC STA 14+09.94
AGG WEDGE SHLD TYPE B
HMA SHOULDERS (5")
MATCHLINE STA. 12+50.00

EX ℄ IL 159 RAMP D
CURVE #2 IL 159 RAMP D
PCC STA 2+29.06
CURVE #1 IL 159 RAMP D
PI STA 1+65.93
HMA SHOULDERS (5")
P SC SMA 12.5 E N80
P HMA BC SMA 12.5 N80
PC STA 1+01.37
POT STA 0+00.00
AGG WEDGE SHLD TYPE B
MATCHLINE STA. 9+00.00

MODEL: IL 159 North [Sheet]
FILE NAME: S:\2021\21IL007 - PTB 198-30 D8 - Willett Hofmann - Various Ph I-IIWO 4 I-64 Resurfacing\CADD\CADD Sheets\D876R99-sht-plan.dgn

QUIGG ENGINEERING INC

USER NAME = rgoertz	DESIGNED - RG	REVISED -		
	DRAWN - RG	REVISED -		
PLOT SCALE = 0.16666633 ' / in.	CHECKED - SMK	REVISED -		
PLOT DATE = 11/22/2024	DATE - 12/02/2024	REVISED -		

STATE OF ILLINOIS
DEPARTMENT OF TRANSPORTATION

ROADWAY PLANS
IL 159 RAMPS

SCALE: 1"=50' | SHEET 28 OF 31 SHEETS | STA. | TO STA.

F.A.I RTE.	SECTION	COUNTY	TOTAL SHEETS	SHEET NO.
64	82-(4,5,6,7)-1RS-2	ST. CLAIR	388	98
		CONTRACT NO. 76R99		
	ILLINOIS	FED. AID PROJECT		

MATCHLINE STA. 11+00.00

MATCHLINE STA. 10+00.00

EX ℄ IL 159 RAMP C

CURVE #1 IL 159 RAMP B

EX ℄ IL 159 RAMP B

CURVE #1 IL 159 RAMP C

P SC SMA 12.5 E N80
P HMA BC SMA 12.5 N80

PC STA 1+00.00

PI STA 1+68.03

END IMPROVEMENT
STA 1+76.26

AGG WEDGE SHLD TYPE B

CURVE #1 IL 159 RAMP C

HMA SHOULDERS (5")

PCC STA 2+34.39

PT STA 11+94.80

AGG WEDGE SHLD TYPE B

HMA SHOULDERS (5")

P SC SMA 12.5 E N80
P HMA BC SMA 12.5 N80

CURVE #2 IL 159 RAMP C

PC STA 14+42.62

EX ℄ IL 159 RAMP B

IL 159

+56.54
36.73' LT

PI STA 15+89.11

PT STA 17+26.45

+47.33

CURVE #2 IL 159 RAMP B

POT STA 20+21.24

POT STA 0+00.00

DETECTOR LOOP REPLACEMENT
SEE SPECIAL PROVISIONS

+57.63
43.53' RT

END IMPROVEMENT
STA 19+65.24

EX CURVE #1 IL 159 RAMP B
PI STA = 9+40.06
Δ = 40°08'07" (RT)
D = 07°32'20"
R = 760.00'
T = 277.63'
L = 532.37'
E = 49.12'
e = ____
PC STA = 6+62.42
PT STA = 11+94.80

EX CURVE #2 IL 159 RAMP B
PI STA = 15+89.11
Δ = 34°58'21" (LT)
D = 12°19'18"
R = 465.00'
T = 146.49'
L = 283.83'
E = 22.53'
e = ____
PC STA = 14+42.62
PT STA = 17+26.45

EX CURVE #1 IL 159 RAMP C
PI STA = 1+68.03
Δ = 22°00'00" (RT)
D = 16°22'13"
R = 350.00'
T = 68.03'
L = 134.39'
E = 6.55'
e = ____
PC STA = 1+00.00
PT STA = 2+34.39

EX CURVE #2 IL 159 RAMP C
PI STA = 7+05.05
Δ = 226°02'42" (RT)
D = 28°38'52"
R = 200.00'
T = 470.66'
L = 789.05'
E = 311.39'
e = ____
PC STA = 2+34.39
PT STA = 10+23.44

EX CURVE #3 IL 159 RAMP C
PI STA = 11+10.63
Δ = 27°58'39" (RT)
D = 16°22'13"
R = 350.00'
T = 87.19'
L = 170.90'
E = 10.70'
e = ____
PC STA = 10+23.44
PT STA = 11+94.34

MATCHLINE STA. 6+00.00

AGG WEDGE SHLD TYPE B

P SC SMA 12.5 E N80
P HMA BC SMA 12.5 N80

HMA SHOULDERS (5")

EX ℄ IL 159 RAMP E

PT STA 3+89.26

PI STA 3+18.33

PC STA 2+45.52

CURVE # 1 IL 159 RAMP E

CLASS B PATCHES, TYPE II, 15 INCH
EXACT LOCATION TO BE DETERMINED
DURING CONSTRUCTION

END IMPROVEMENT
STA 2+00.00

EX CURVE #2 IL 159 RAMP E
PI STA = 9+28.08
Δ = 43°46'13" (RT)
D = 07°30'00"
R = 763.94'
T = 306.87'
L = 583.60'
E = 59.33'
e = ____
PC STA = 6+21.21
PT STA = 12+04.81

EX CURVE #1 IL 159 RAMP E
PI STA = 3+18.33
Δ = 22°33'51" (LT)
D = 15°41'51"
R = 365.00'
T = 72.82'
L = 143.74'
E = 7.19'
e = ____
PC STA = 2+45.52
PT STA = 3+89.26

N

0 50 100 150
SCALE IN FEET

MODEL: IL 159 South [Sheet]
FILE NAME: S:\2021\21IL007 - PTB 198-30 D8 - Willett Hofmann - Various Ph I-IIWO 4 I-64 Resurfacing\CADD\CADD Sheets\D876R99-sht-plan.dgn

QUIGG ENGINEERING INC

USER NAME = toverton	DESIGNED - RG	REVISED -	
	DRAWN - RG	REVISED -	
PLOT SCALE = 0.16666633 ' / in.	CHECKED - SMK	REVISED -	
PLOT DATE = 11/22/2024	DATE - 12/02/2024	REVISED -	

STATE OF ILLINOIS
DEPARTMENT OF TRANSPORTATION

ROADWAY PLANS
IL 159 RAMPS

SCALE: 1"=50' | SHEET 29 OF 31 SHEETS | STA. | TO STA.

F.A.I RTE.	SECTION	COUNTY	TOTAL SHEETS	SHEET NO.
64	82-(4,5,6,7)-1RS-2	ST. CLAIR	388	99
		CONTRACT NO. 76R99		
	ILLINOIS FED. AID PROJECT			

EX CURVE #2 HWY 50 RAMP C
PI STA = 11+39.72
Δ = 26°39'44" (RT)
D = 08°18'13"
R = 690.00'
T = 163.50'
L = 321.09'
E = 19.11'
e = ____
PC STA = 9+76.21
PT STA = 12+97.30

N

0 50 100 150
SCALE IN FEET

EX CURVE #1 HWY 50 RAMP C
PI STA = 2+94.56
Δ = 53°14'19" (LT)
D = 23°52'24"
R = 240.00'
T = 120.28'
L = 223.01'
E = 28.46'
e = ____
PC STA = 1+74.28
PT STA = 3+97.28

END IMPROVEMENT STA 3+97.28

SALEM PL
PT STA 12+97.30
PI STA 11+39.72
PC STA 9+76.21
CURVE #2 HWY 50 RAMP C
EX ℄ US 50 RAMP C
SHOULDER RUM STRIP 16
AGG WEDGE SHLD TYPE B
HMA SHOULDERS (5")
P SC SMA 12.5 E N80
P HMA BC SMA 12.5 N80
PT STA 3+97.28
CURVE #1 HWY 50 RAMP C
PI STA 2+94.56
PC STA 1+74.28
EX ℄ I-64
POT STA 9+88.30
POT STA 0+00.00
EX ℄ US 50 RAMP B

MODEL: HWY 50 East [Sheet]
FILE NAME: S:\2021\21IL007 - PTB 198-30 D8 - Willett Hofmann - Various Ph I-IIWO 4 I-64 Resurfacing\CADD\CADD Sheets\D876R99-sht-plan.dgn

QUIGG ENGINEERING INC

USER NAME = rgoertz	DESIGNED - RG	REVISED -	
	DRAWN - RG	REVISED -	
PLOT SCALE = 0.16666633 ' / in.	CHECKED - SMK	REVISED -	
PLOT DATE = 11/17/2024	DATE -	REVISED -	

STATE OF ILLINOIS
DEPARTMENT OF TRANSPORTATION

ROADWAY PLANS
HIGHWAY 50 RAMPS

SCALE: 1"=50' | SHEET 30 OF 31 SHEETS | STA. | TO STA.

F.A.I RTE.	SECTION	COUNTY	TOTAL SHEETS	SHEET NO.
64	82-(4,5,6,7)-1RS-2	ST. CLAIR	388	100
		CONTRACT NO. 76R99		
	ILLINOIS FED. AID PROJECT			

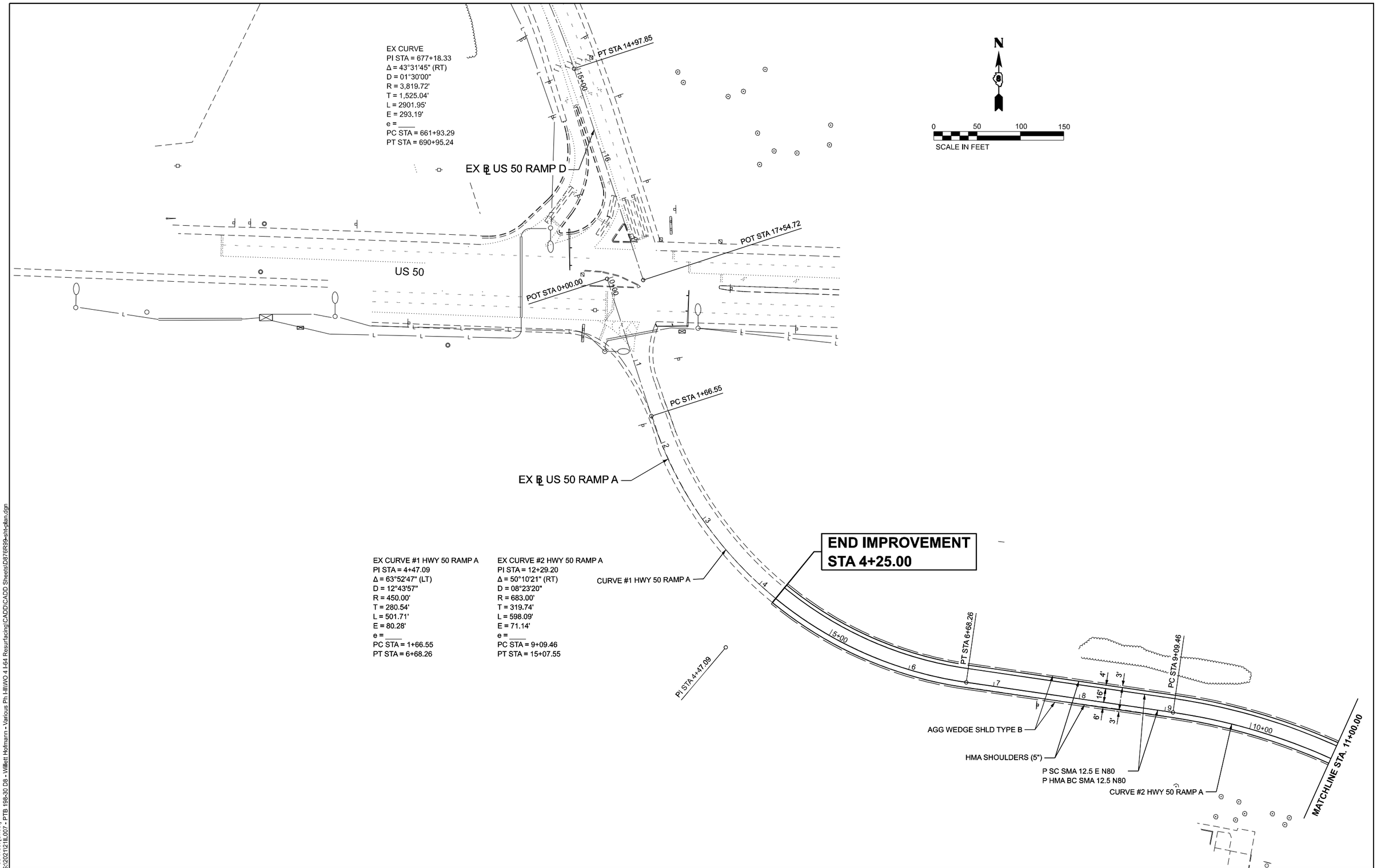

EX CURVE #1 HWY 50 RAMP A
PI STA = 4+47.09
Δ = 63°52'47" (LT)
D = 12°43'57"
R = 450.00'
T = 280.54'
L = 501.71'
E = 80.28'
e = ____
PC STA = 1+66.55
PT STA = 6+68.26

EX CURVE #2 HWY 50 RAMP A
PI STA = 12+29.20
Δ = 50°10'21" (RT)
D = 08°23'20"
R = 683.00'
T = 319.74'
L = 598.09'
E = 71.14'
e = ____
PC STA = 9+09.46
PT STA = 15+07.55

MODEL: HWY 50 West [Sheet]
FILE NAME: S:\2021\21L007 - PTB 198-30 D8 - Willett Hofmann - Various Ph I\HWO 4 I-64 Resurfacing\CADD\CADD Sheets\D876R99-sht-plan.dgn

QUIGG ENGINEERING INC

USER NAME = toverton	DESIGNED - RG	REVISED -	
	DRAWN - RG	REVISED -	
PLOT SCALE = 0.16666633 ' / in.	CHECKED - SMK	REVISED -	
PLOT DATE = 11/5/2024	DATE -	REVISED -	

STATE OF ILLINOIS
DEPARTMENT OF TRANSPORTATION

ROADWAY PLANS
HIGHWAY 50 RAMPS

SCALE: 1"=50' | SHEET 31 OF 31 SHEETS | STA. | TO STA.

F.A.I RTE.	SECTION	COUNTY	TOTAL SHEETS	SHEET NO.
64	82-(4,5,6,7)-1RS-2	ST. CLAIR	388	101
		CONTRACT NO. 76R99		
	ILLINOIS FED. AID PROJECT			

MAINTENANCE OF TRAFFIC GENERAL NOTES

1. THE CONTRACTOR MUST COORDINATE ALL LANE CLOSURES WITH THE ENGINEER.
2. ALL TRAFFIC CONTROL DEVICES AND SIGNAGE REQUIRED ON I-64, IL 157, IL 159 (ILLINOIS ST), HWY 50, RAMPS, AND GREENMOUNT ROAD IN ACCORDANCE WITH APPLICABLE IDOT HIGHWAY STANDARDS AND THIS CONTRACTS DRAWINGS IS INCLUDED IN THE COST OF "TRAFFIC CONTROL AND PROTECTION (SPECIAL)".
3. LANE CLOSURES, RAMP CLOSURES, SIGNING, PAVEMENT MARKING AND BARRICADE PLACEMENT SHALL BE IN ACCORDANCE WITH THE LATEST HIGHWAY STANDARD DRAWINGS.
4. EXISTING PAVEMENT MARKINGS THAT CONFLICT WITH TEMPORARY PAVEMENT MARKINGS SHALL BE REMOVED, AS DIRECTED BY THE ENGINEER. THE REMOVAL WILL BE MEASURED IN SQUARE FEET AND PAID FOR AS "PAVEMENT MARKING REMOVAL".
5. ALL DRUMS, VERTICAL PANELS, AND BARRICADES IMMEDIATELY ADJACENT TO THE EDGE OF TRAVELED WAY SHALL BE EQUIPPED WITH BIDIRECTIONAL STEADY BURN LIGHTS. CONES WILL NOT BE ALLOWED, UNLESS NOTED. DRUM SPACING SHALL BE 50' CENTER TO CENTER ALONG THE I-64 AND 25' C-C AT ALL RAMP LOCATIONS. DRUM SHALL BE PLACED AT 100' C-C AT LOCATIONS OF FULL SHOULDER WIDTH. THIS WORK WILL BE INCLUDED IN THE CONTRACT UNIT PRICE FOR "TRAFFIC CONTROL AND PROTECTION (SPECIAL)",
6. ANY EXISTING SIGNS DENOTED WITHIN THE PLAN SET THAT DO NOT APPLY TO THE REVISED TRAFFIC PATTERNS SHALL BE REMOVED OR COVERED, AS DIRECTED BY THE ENGINEER. THE COVERING OR REMOVAL OF GROUND MOUNTED/ OVERHEAD SIGNS SHALL BE NON-DESTRUCTIVE IN NATURE AND WILL NOT BE MEASURED FOR PAYMENT BUT IS CONSIDERED INCLUDED IN THE CONTRACT UNIT PRICE FOR "TRAFFIC CONTROL AND PROTECTION (SPECIAL)".
7. TEMPORARY CONCRETE BARRIER MUST BE CONTINUOUSLY PINNED ALONG THE TRAFFIC SIDE WHERE HAZARD EXISTS WITHIN 3.5 FEET OF BEHIND OF THE TEMPORARY CONCRETE BARRIER; THE BARRIER SHALL BE ANCHORED TO THE PAVEMENT.
8. ADVANCED SIGNING AND/OR CHANGEABLE MESSAGE SIGNS SHALL BE USED IN ADVANCE OF ROAD WORK IN BOTH DIRECTIONS ALONG I-64, IL 157, IL 159 (ILLINOIS ST), HWY 50, AND GREENMOUNT ROAD. CHANGEABLE MESSAGE SIGNS SHALL BE USED IN ADVANCE OF RAMP WORK. ADVANCED SIGNING WILL BE PAID FOR AT THE CONTRACT UNIT PRICE FOR "TEMPORARY SIGNING" CHANGEABLE MESSAGE SIGNS WILL BE PAID AT THE CONTRACT UNIT PRICE FOR "CHANGEABLE MESSAGE SIGN".
9. ALL TEMPORARY PAVEMENT MARKINGS SHALL BE PAVEMENT MARKING TAPE, TYPE IV OF THE LINE WIDTH SPECIFIED.
10. THE CONTRACTOR IS RESPONSIBLE FOR COORDINATING AND PROVIDING ACCESS POINTS TO THE WORK ZONE. ACCESS POINTS MUST BE APPROVED BY THE ENGINEER PRIOR TO INSTALLATION. ANY SIGNING OR ADDITIONAL TRAFFIC CONTROL DEVICES REQUIRED TO PROVIDE CONTRACTOR ACCESS TO THE WORK ZONE IS INCLUDED IN THE COST OF "TRAFFIC CONTROL AND PROTECTION (SPECIAL)".
11. THERE ARE NO DRAWINGS FOR MAINLINE PAVING STAGING PROVIDED. WORK ZONE SHALL BE IN ACCORDANCE WITH APPLICABLE IDOT HIGHWAY STANDARDS 701401, 701411, 701446, 701451, & 701456.
12. THE CONTRACTOR IS RESPONSIBLE FOR COORDINATING THE PLACEMENT AND MESSAGES FOR ALL CHANGEABLE MESSAGE SIGNS WITH THE ENGINEER.

MAINTENANCE OF TRAFFIC GENERAL NOTES, CONTINUED

13. STRUCTURAL WORK FOR OVERHEAD STRUCTURES THAT IS REQUIRED TO BE COMPLETED FROM BELOW WILL NEED LANE CLOSURES ON I-64 WITH IDOT DISTRICT MOVABLE BARRIER. CONTACT CRAIG POETTKER AT 618-346-3279 TEN WORKING DAYS PRIOR TO ANTICIPATED LANE CLOSURS. ADDITIONAL SIGNING REQUIRED BY THE DISTRICT FOR THE MOVABLE BARRIER WILL BE INCLUDED IN THE LUMP SUM COST FOR "TRAFFIC CONTROL AND PROTECTION (SPECIAL)".
14. LANE CLOSURES REQUIRED ON OVERHEAD BRIDGES WILL REQUIRE TEMPORARY CONCRETE BARRIER WALL, ATTENUATORS AND TEMPORARY BRIDGE TRAFFIC SIGNALS AS SHOWN ON HIGHWAY STANDARD 701321. THE WORK SHOWN ON THE HIGHWAY STANDARD 701321 INCLUDING REQUIRED RELOCATIONS FOR ADDITIONAL STAGES WILL BE INCLUDED IN THE LUMP SUM COST FOR "TRAFFIC CONTROL AND PROTECTION (SPECIAL)".

PRE-STAGE

WORK DURING THIS STAGE WILL INCLUDE ALL WORK THAT IS REQUIRED TO PLACE TRAFFIC IN STAGE 1 INCLUDING BUT NOT LIMITED TO SIGNING, PAVEMENT MARKING AND INLET AND PIPE PROTECTION.

PROPOSED BRIDGE REPAIR ON STRUCTURES. CONSTRUCTION ALLOWED ON ONE STRUCTURE AT A TIME IN EACH DIRECTION.

I-64 (I-255 TO IL 159)

SEE PEAK HOUR SCHEDULE BELOW

I-64 (IL 159 TO GREENMOUNT ROAD)

SEE PEAK HOUR SCHEDULE BELOW

PEAK HOUR SCHEDULE

I-64 (I-255 to GREENMOUNT RD)

	12:00 AM	1:00 AM	2:00 AM	3:00 AM	4:00 AM	5:00 AM	6:00 AM	7:00 AM	8:00 AM	9:00 AM	10:00 AM	11:00 AM	12:00 PM	1:00 PM	2:00 PM	3:00 PM	4:00 PM	5:00 PM	6:00 PM	7:00 PM	8:00 PM	9:00 PM	10:00 PM	11:00 PM
I-64 W OF IL 159																								
WB BRIDGE (ONE LANE CLOSED CONC BARRIER)	Y	Y	Y	Y	Y	Y	Y	Y	Y	Y	Y	Y	Y	Y	Y	Y	Y	Y	Y	Y	Y	Y	Y	Y
WB ONE LANE CLOSED REPAVING	Y	Y	Y	Y	Y	Y	N	N	N	N	N	N	N	N	N	N	N	N	N	Y	Y	Y	Y	Y
WB TWO LANE CLOSED REPAVING	Y	Y	Y	Y	Y	N	N	N	N	N	N	N	N	N	N	N	N	N	N	N	N	Y	Y	Y
I-64 W OF IL 159																								
EB BRIDGE (ONE LANE CLOSED CONC BARRIER)	Y	Y	Y	Y	Y	Y	Y	Y	Y	Y	Y	Y	Y	Y	Y	Y	Y	Y	Y	Y	Y	Y	Y	Y
EB ONE LANE CLOSED REPAVING	Y	Y	Y	Y	Y	Y	Y	N	N	N	N	N	N	N	N	N	N	N	N	Y	Y	Y	Y	Y
EB TWO LANE CLOSED REPAVING	Y	Y	Y	Y	Y	Y	N	N	N	N	N	N	N	N	N	N	N	N	N	N	N	N	Y	Y
I-64 E OF IL 159																								
WB BRIDGE (ONE LANE CLOSED CONC BARRIER)	Y	Y	Y	Y	Y	Y	Y	Y	Y	Y	Y	Y	Y	Y	Y	Y	Y	Y	Y	Y	Y	Y	Y	Y
WB ONE LANE CLOSED REPAVING	Y	Y	Y	Y	Y	Y	N	N	N	N	N	N	N	N	N	N	N	N	Y	Y	Y	Y	Y	Y
WB TWO LANE CLOSED REPAVING	Y	Y	Y	Y	Y	N	N	N	N	N	N	N	N	N	N	N	N	N	N	N	N	Y	Y	Y
I-64 E OF IL 159																								
EB BRIDGE (ONE LANE CLOSED CONC BARRIER)	Y	Y	Y	Y	Y	Y	Y	Y	Y	Y	Y	Y	Y	Y	Y	Y	Y	Y	Y	Y	Y	Y	Y	Y
EB ONE LANE CLOSED REPAVING	Y	Y	Y	Y	Y	Y	Y	Y	Y	N	N	N	N	N	N	N	N	N	Y	Y	Y	Y	Y	Y
EB TWO LANE CLOSED REPAVING	Y	Y	Y	Y	Y	Y	N	N	N	N	N	N	N	N	N	N	N	N	N	N	N	N	Y	Y

MODEL: Typ1
FILE NAME: c:\bms\dog-pw-01\new user\dms27\5\5ID876R99-sht-MOT_Typ.dgn

Kaskaskia Engineering Group, LLC
209 E. Main St., Suite 101, Salem, Illinois 62881
618.233.5877 phone
618.233.5877 fax
www.kaskaskiaeng.com
PROFESSIONAL ASSOCIATION LICENSE NO. 184.006995
Illinois Professional Design Firm - Professional Engineering Group
LICENSE NO. 20-3500591

USER NAME = rjo	DESIGNED -	REVISED -	
	DRAWN -	REVISED -	
	CHECKED -	REVISED -	
PLOT DATE = 1/14/2025	DATE -	REVISED -	

STATE OF ILLINOIS
DEPARTMENT OF TRANSPORTATION

SUGGESTED MAINTENANCE OF TRAFFIC & GENERAL NOTES
I-64 (I-255 TO GREENMOUNT RD)

SCALE: | SHEET OF SHEETS | STA. | TO STA.

F.A.I. RTE.	SECTION	COUNTY	TOTAL SHEETS	SHEET NO.
64	82-(4,5,6,7)-1R-2	ST CLAIR		
		CONTRACT NO. 76R99		
	ILLINOIS FED. AID PROJECT			

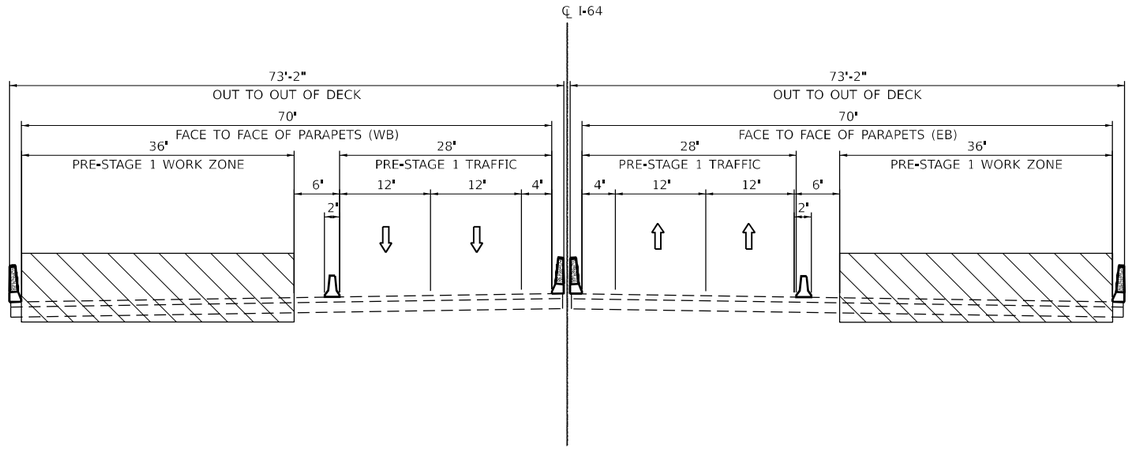

INTERSTATE 64
PRE-STAGE 1 TYPICAL SECTION
S.N. 082-0306 (EB) & S.N. 082-0307 (WB)

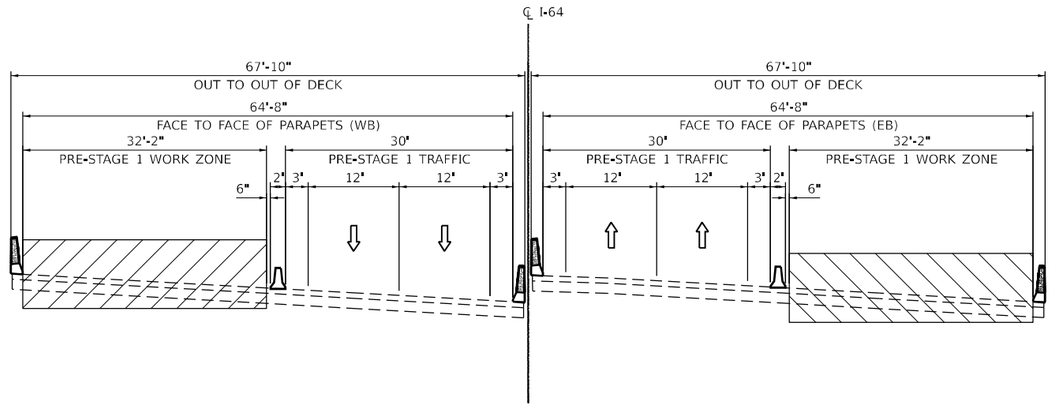

INTERSTATE 64
PRE-STAGE 1 TYPICAL SECTION
S.N. 082-0308 (EB) & S.N. 082-0309 (WB)

MODEL: Typ2
FILE NAME: c:\bms\keg-pw-01\new user\dms27575\D876R99-sht-MOT_Typ.dgn

Kaskaskia Engineering Group, LLC
204 E. Main St., Suite 100
Belleville, Illinois 62220
618.233.5977 phone
618.233.5977 fax
www.kaskaskiaeng.com
PROFESSIONAL REGISTRATIONS
Illinois Professional Design Firm
Professional Engineering Group
EXPIRATION DATE
184.004793
20-5000586

USER NAME = rjo	DESIGNED -	REVISED -	
	DRAWN -	REVISED -	
	CHECKED -	REVISED -	
PLOT DATE = 11/26/2024	DATE -	REVISED -	

STATE OF ILLINOIS
DEPARTMENT OF TRANSPORTATION

SUGGESTED MAINTENANCE OF TRAFFIC - PRE-STAGE 1
TYPICAL SECTIONS

SCALE: | SHEET 1 OF 2 SHEETS | STA. | TO STA.

F.A.I. RTE.	SECTION	COUNTY	TOTAL SHEETS	SHEET NO.
64	82-(4,5,6,7)-1RS-2	ST CLAIR	388	103

CONTRACT NO. 76R99

ILLINOIS | FED. AID PROJECT

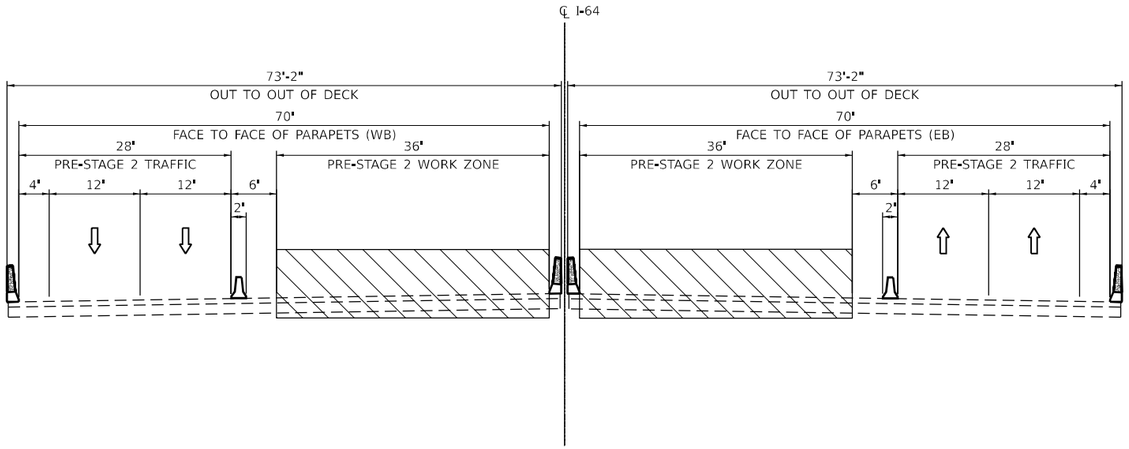

INTERSTATE 64
PRE-STAGE 2 TYPICAL SECTION
S.N. 082-0306 (EB) & S.N. 082-0307 (WB)

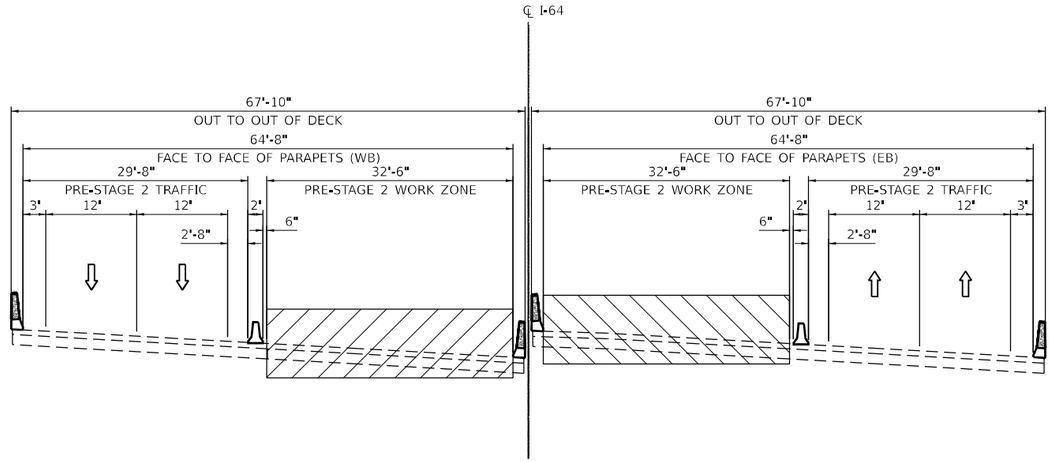

INTERSTATE 64
PRE-STAGE 2 TYPICAL SECTION
S.N. 082-0308 (EB) & S.N. 082-0309 (WB)

MODEL: Typ3
FILE NAME: c:\bms\keg-pw-01\new user\dms27575\D876R99-sht-MOT_Typ.dgn

Kaskaskia Engineering Group, LLC
204 E. Main St., Suite 100
Belleville, Illinois 62220
618.233.5977 phone
618.233.5977 fax
www.kaskaskiaeng.com
PROFESSIONAL REGISTRATIONS
Illinois Professional Design Firm
Professional Engineering Group
EXPIRES 2025
184.004793
20-5000586

USER NAME = rjo	DESIGNED -	REVISED -	
	DRAWN -	REVISED -	
	CHECKED -	REVISED -	
PLOT DATE = 11/26/2024	DATE -	REVISED -	

STATE OF ILLINOIS
DEPARTMENT OF TRANSPORTATION

SUGGESTED MAINTENANCE OF TRAFFIC - PRE-STAGE 2
TYPICAL SECTIONS

SCALE: | SHEET 2 OF 2 SHEETS | STA. | TO STA.

F.A.I. RTE.	SECTION	COUNTY	TOTAL SHEETS	SHEET NO.
64	82-(4,5,6,7)-1RS-2	ST CLAIR	388	103A

CONTRACT NO. 76R99

ILLINOIS | FED. AID PROJECT

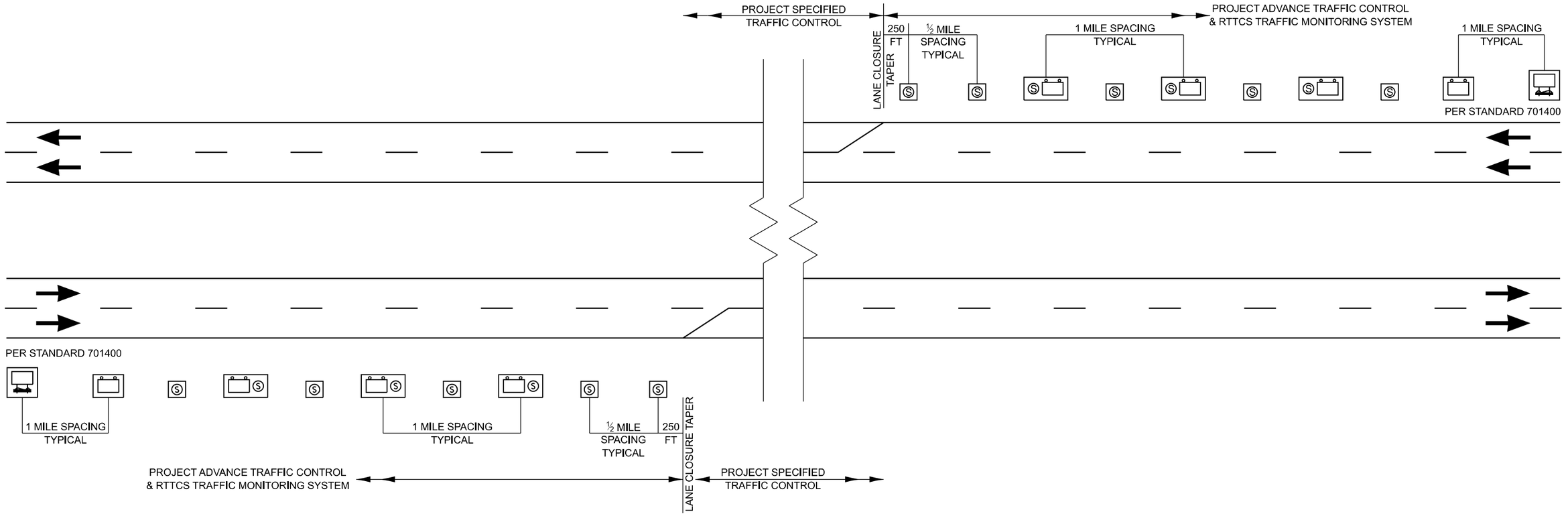

LEGEND

REAL-TIME TRAFFIC CONTROL WARNING SIGN
PROJECT SIGN SHALL BE A 48" X 96" (1200MM X 2400MM)
SIGN THAT SAYS:
"STOPPED TRAFFIC NEXT MILE WHEN FLASHING".

STOPPED TRAFFIC
NEXT MILE
WHEN FLASHING

SINGLE PORTABLE CHANGEABLE MESSAGE SIGN PLACED 1 MILE
IN ADVANCE OF THE REAL-TIME TRAFFIC CONTROL WARNING SIGN.
IT SHALL READ: "RIGHT/LEFT LANE CLOSED // X MILES AHEAD"
THIS PORTABLE CHANGEABLE MESSAGE SIGN IS INCLUDED IN STANDARD 701400

S REAL-TIME TRAFFIC MONITORING SENSOR UNIT

NOTES:

1. THE NUMBER OF REAL-TIME TRAFFIC CONTROL WARNINGS SIGNS MAY BE CHANGED AS DIRECTED BY THE ENGINEER. RELOCATION OF REAL-TIME TRAFFIC CONTROL STATIC WARNING SIGNS IS INCLUDED IN THE REAL-TIME TRAFFIC CONTROL PAY ITEMS.
2. REAL-TIME TRAFFIC CONTROL MONITORING SENSOR UNITS SPACED APPROXIMATELY EVERY 1/2 MILE AND REAL-TIME TRAFFIC CONTROL WARNING SIGNS SPACED EVERY 1 MILE OR AS DIRECTED BY THE ENGINEER.
3. THE FIRST REAL-TIME TRAFFIC MONITORING SENSORS UNIT IS TO BE PLACED 250 FOOT UPSTREAM OF THE TAPER.
4. THE SECOND REAL-TIME SPEED TRAFFIC MONITORING SENSOR UNIT IS TO BE PLACED 250 FOOT IN ADVANCE OF THE RIGHT LANE/LEFT LANE CLOSED 1/2 MILE SIGN (STD. 701400).
5. THE FIRST REAL-TIME TRAFFIC CONTROL WARNINGS SIGN SHOULD BE PLACED 500 FOOT IN ADVANCE OF THE RIGHT/LEFT LANE CLOSED 1 MILE SIGN (STD. 701400)
6. THE NUMBER OF RTTCS DEVICES MAY BE REDUCED BASED ON THE LOCATION OF THE PORTABLE CHANGEABLE MESSAGE SIGN PER (STD. 701400) AS DIRECTED BY THE ENGINEER.

Note: All dimensions are in INCHES (millimeters) unless otherwise shown.

MODEL: D876R99-sht-RTTC
FILE NAME: c:\bms\keg-pw-01\new user\dms27575\D876R99-sht-RTTC.dgn

Kaskaskia Engineering Group, LLC
PROFESSIONAL REGISTRATIONS
Illinois Professional Design Firm
Professional Engineering Group

USER NAME = rjo	DESIGNED - RJO	REVISED -	STATE OF ILLINOIS DEPARTMENT OF TRANSPORTATION
	DRAWN - RJO	REVISED -	
PLOT SCALE = $SCALE$	CHECKED - EJL	REVISED -	
PLOT DATE = 11/25/2024	DATE -	REVISED -	

REAL-TIME TRAFFIC CONTROL SYSTEM

SCALE: SHEET 1 OF 1 SHEETS STA. TO STA.

F.A.I. RTE.	SECTION	COUNTY	TOTAL SHEETS	SHEET NO.
64	82-(4,5,6,7)-1RS-2	ST. CLAIR	388	104
		CONTRACT NO. 76R99		
		ILLINOIS FED. AID PROJECT		

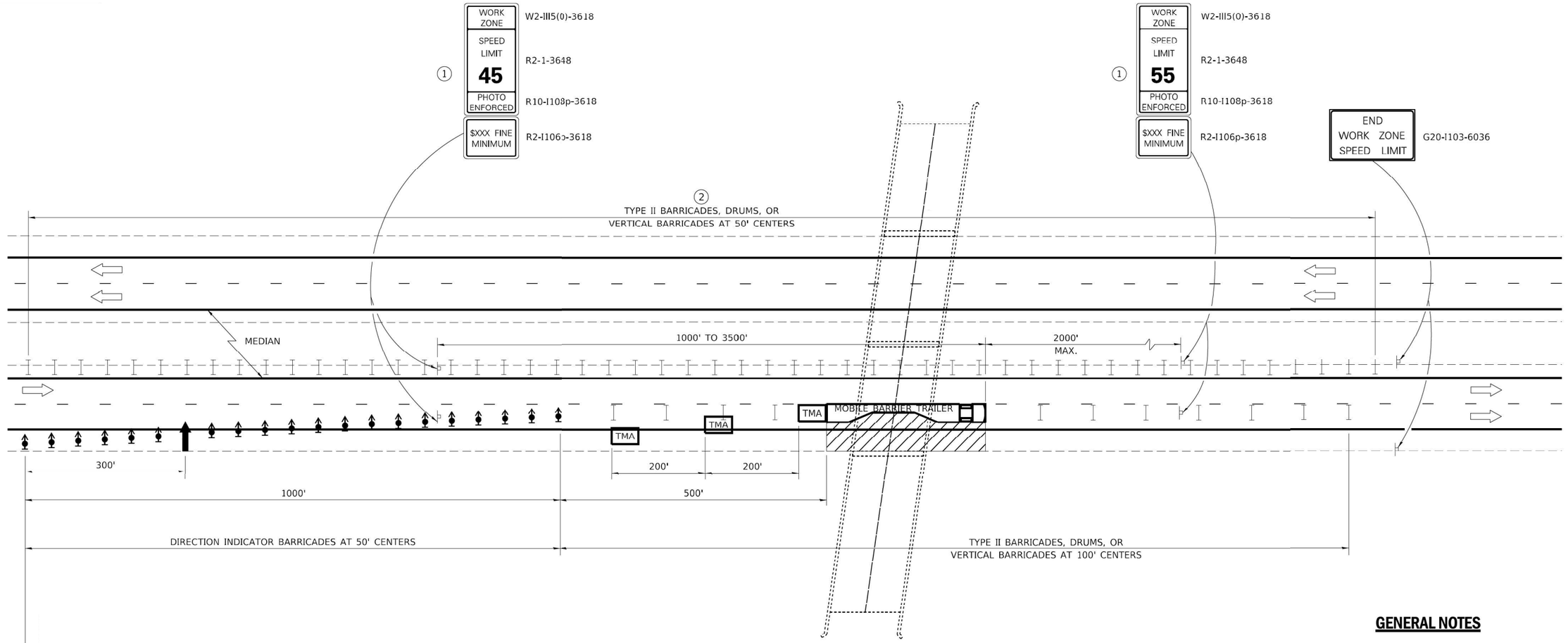

GENERAL NOTES

THIS DETAIL IS USED WHERE AT ANY TIME ANY VEHICLE, EQUIPMENT, WORKERS OR THEIR ACTIVITIES WILL ENCROACH ON THE LANE ADJACENT TO THE SHOULDER, OR ON THE SHOULDER WITHIN 2' OF THE EDGE OF PAVEMENT.

THIS DETAIL MUST BE USED IN COMBINATION WITH STANDARD 701400.

THIS DETAIL ALSO APPLIES WHEN WORK IS BEING PERFORMED IN THE LEFT LANE. UNDER THESE CONDITIONS, THE SETUP WOULD BE A MIRROR IMAGE TO WHAT IS SHOWN.

A CHECK BARRICADE SHALL BE PLACED IN THE MIDDLE OF THE CLOSED LANE AND AT THE SHOULDER AT 1000' CENTERS.

ALL DIMENSIONS ARE IN INCHES UNLESS OTHERWISE SHOWN.

LEGEND

- ARROW BOARD
- WORK AREA
- TMA — TRUCK/TRAILER MOUNTED ATTENUATOR
- SIGN
- DIRECTION INDICATOR BARRICADE WITH STEADY BURN MONODIRECTIONAL LIGHT
- TYPE II BARRICADE, DRUM, OR VERTICAL BARRICADE
- MOBILE BARRIER TRAILER — MOBILE BARRIER TRAILER

1. WORK ZONE SPEED LIMIT SIGNS SHALL BE MOVED AS NECESSARY TO MAINTAIN THE REQUIRED SPACING BETWEEN THE SIGNS AND THE WORKERS IN EACH SEPARATE WORK ACTIVITY. WORK ZONE SPEED LIMIT 55 PHOTO ENFORCED SIGN SHALL BE OMITTED WHEN THE WORK AREA DICTATES PLACEMENT OF THE SIGN ARRAY WITHIN 500' OF THE END WORK ZONE SPEED LIMIT SIGN.
2. TYPE II BARRICADES SHALL BE PLACED WHERE CABLE MEDIAN BARRIER IS TEMPORARILY REMOVED, WHEN ADJACENT LANE HAS BEEN OPENED TO TRAFFIC. PLACEMENT OF DEVICES ARE SUBJECT TO DISCRETION OF RESIDENT ENGINEER.

NOT TO SCALE

LANE CLOSURE, FREEWAY / EXPRESSWAY DETAIL

MODEL: D876R99-sht-701401 SPECIAL
FILE NAME: c:\bms\keg-pw-01\new user\dms27575\D876R99-sht-RTTC.dgn

Kaskaskia Engineering Group, LLC
208 E. Main St., Suite 100
Belleville, Illinois 62220
618.233.5977 phone
618.233.5977 fax
www.kaskaskiaeng.com
PROFESSIONAL REGISTRATIONS
Illinois Professional Design Firm
Professional Engineering Group
LICENSE NO.
184.004793
20-5005586

USER NAME = rjo	DESIGNED - RJO	REVISED -	
	DRAWN - RJO	REVISED -	
PLOT SCALE = $SCALE$	CHECKED - EJL	REVISED -	
PLOT DATE = 11/26/2024	DATE -	REVISED -	

STATE OF ILLINOIS
DEPARTMENT OF TRANSPORTATION

MOBILE BARRIER TRAILER DETAIL

SCALE: | SHEET 1 OF 1 SHEETS | STA. | TO STA.

F.A.I. RTE.	SECTION	COUNTY	TOTAL SHEETS	SHEET NO.
64	82-(4,5,6,7)-1RS-2	ST. CLAIR	388	105

CONTRACT NO. 76R99

ILLINOIS | FED. AID PROJECT

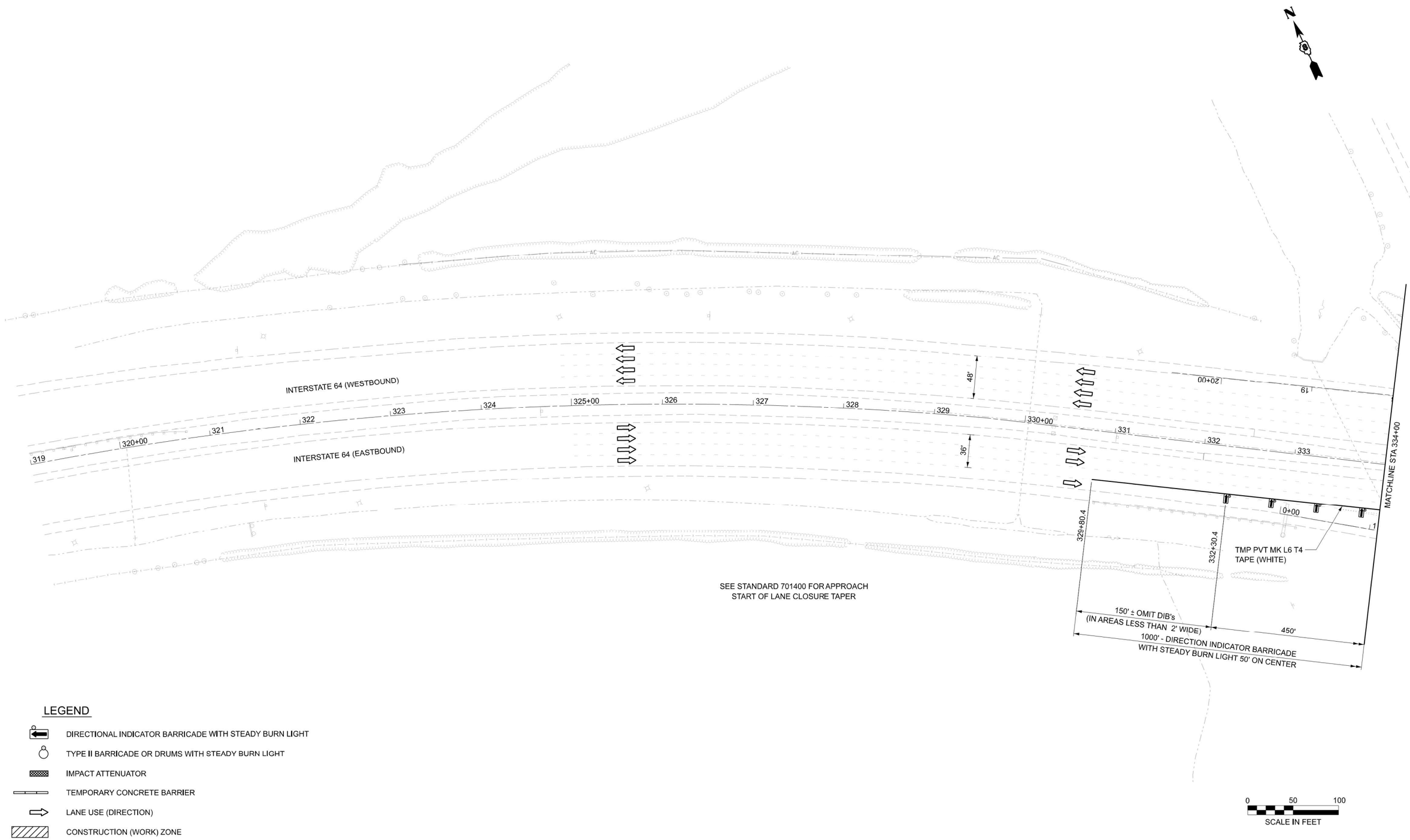

LEGEND

- DIRECTIONAL INDICATOR BARRICADE WITH STEADY BURN LIGHT
- TYPE II BARRICADE OR DRUMS WITH STEADY BURN LIGHT
- IMPACT ATTENUATOR
- TEMPORARY CONCRETE BARRIER
- LANE USE (DIRECTION)
- CONSTRUCTION (WORK) ZONE

MODEL: I64_CL - IL64_MOT-1 [Sheet]
FILE NAME: c:\bmskeg-pw-01\new user\3ms27575\D876R99-sht-MOT.dgn

Kaskaskia Engineering Group, LLC
PROFESSIONAL REGISTRATIONS
Illinois Professional Design Firm
Professional Engineering Group
LICENSE NOS.
184.006773
20-5008306

USER NAME = rjo	DESIGNED - RJO	REVISED -	
	DRAWN - RJO	REVISED -	
	CHECKED - EJL	REVISED -	
PLOT DATE = 11/25/2024	DATE -	REVISED -	

STATE OF ILLINOIS
DEPARTMENT OF TRANSPORTATION

SUGGESTED MAINTENANCE OF TRAFFIC - PRE-STAGE 1
S.N. 082-0306 (EB) & S.N. 082-0307 (WB)

SCALE: | SHEET 1 OF 4 SHEETS | STA. | TO STA.

F.A.I. RTE.	SECTION	COUNTY	TOTAL SHEETS	SHEET NO.
64	82-(4,5,6,7)-1RS-2	ST. CLAIR	388	106
		CONTRACT NO. 79R99		
	ILLINOIS	FED. AID PROJECT		

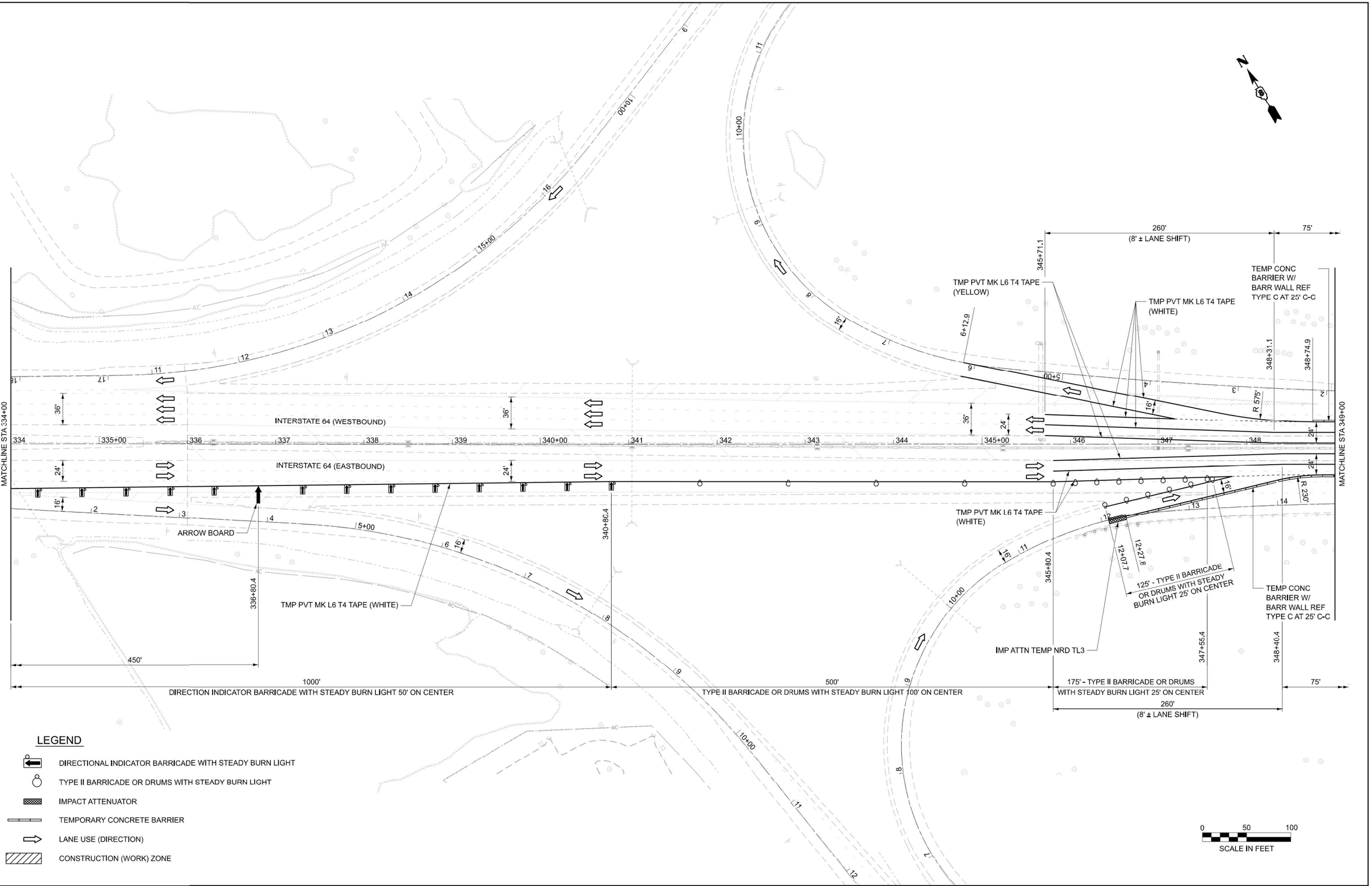

LEGEND

- DIRECTIONAL INDICATOR BARRICADE WITH STEADY BURN LIGHT
- TYPE II BARRICADE OR DRUMS WITH STEADY BURN LIGHT
- IMPACT ATTENUATOR
- TEMPORARY CONCRETE BARRIER
- LANE USE (DIRECTION)
- CONSTRUCTION (WORK) ZONE

MODEL: I64_CL - IL64_MOT-2 [Sheet]
FILE NAME: c:\bms\esg-pw-01\new user\dms27575\D876R99-eht-MOT.dgn

Kaskaskia Engineering Group, LLC
200 E. Main St., Suite 300, Belleville, Illinois 62220
618.233.5077 phone 618.233.5077 fax www.kaskaskiaeng.com
PROFESSIONAL REGISTRATIONS
Illinois Professional Design Firm 184.004773
Professional Engineering Group 20.5008186

USER NAME = rjo	DESIGNED - RJO	REVISED -	
	DRAWN - RJO	REVISED -	
	CHECKED - EJL	REVISED -	
PLOT DATE = 11/25/2024	DATE -	REVISED -	

STATE OF ILLINOIS
DEPARTMENT OF TRANSPORTATION

SUGGESTED MAINTENANCE OF TRAFFIC - PRE-STAGE 1
S.N. 082-0306 (EB) & S.N. 082-0307 (WB)

SCALE: | SHEET 2 OF 4 SHEETS | STA. | TO STA.

F.A.I. RTE.	SECTION	COUNTY	TOTAL SHEETS	SHEET NO.
64	82-(4,5,6,7)-1RS-2	ST. CLAIR	388	107
		CONTRACT NO. 76R99		
	ILLINOIS	FED. AID PROJECT		

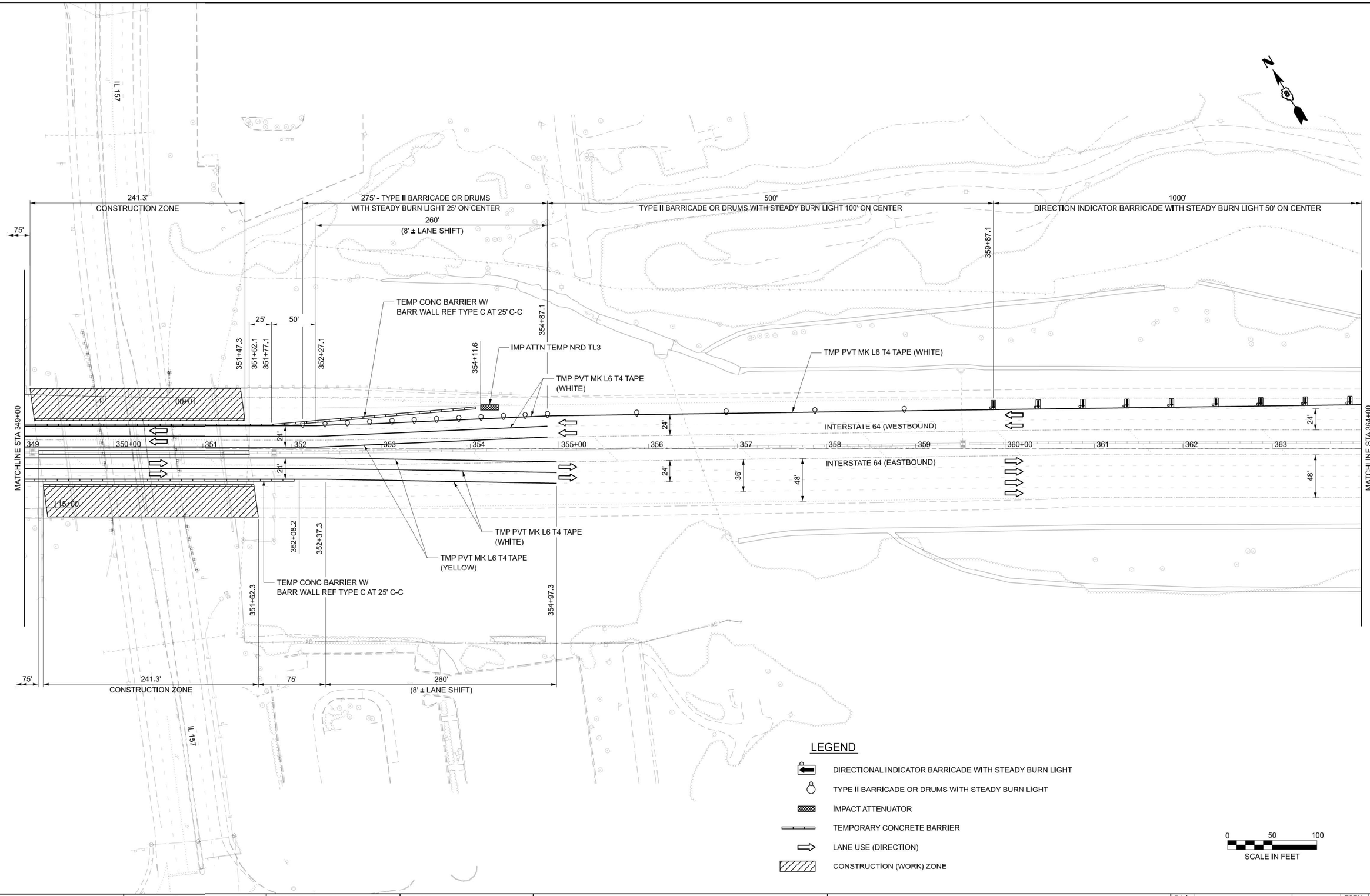

MODEL: I64_CL - IL64_MOT-3 [Sheet]
FILE NAME: c:\bms\keg-pw-01\new user\dms27575\D876R99-sht-MOT.dgn

Kaskaskia Engineering Group, LLC
PROFESSIONAL REGISTRATIONS
Illinois Professional Design Firm
Professional Engineering Group

USER NAME = rjo	DESIGNED - RJO	REVISED -	
	DRAWN - RJO	REVISED -	
	CHECKED - EJL	REVISED -	
PLOT DATE = 11/25/2024	DATE -	REVISED -	

STATE OF ILLINOIS
DEPARTMENT OF TRANSPORTATION

SUGGESTED MAINTENANCE OF TRAFFIC - PRE-STAGE 1
S.N. 082-0306 (EB) & S.N. 082-0307 (WB)

SCALE: SHEET 3 OF 4 SHEETS STA. TO STA.

F.A.I. RTE.	SECTION	COUNTY	TOTAL SHEETS	SHEET NO.
64	82-(4,5,6,7)-1RS-2	ST. CLAIR	388	108
		CONTRACT NO. 76R99		
		ILLINOIS	FED. AID PROJECT	

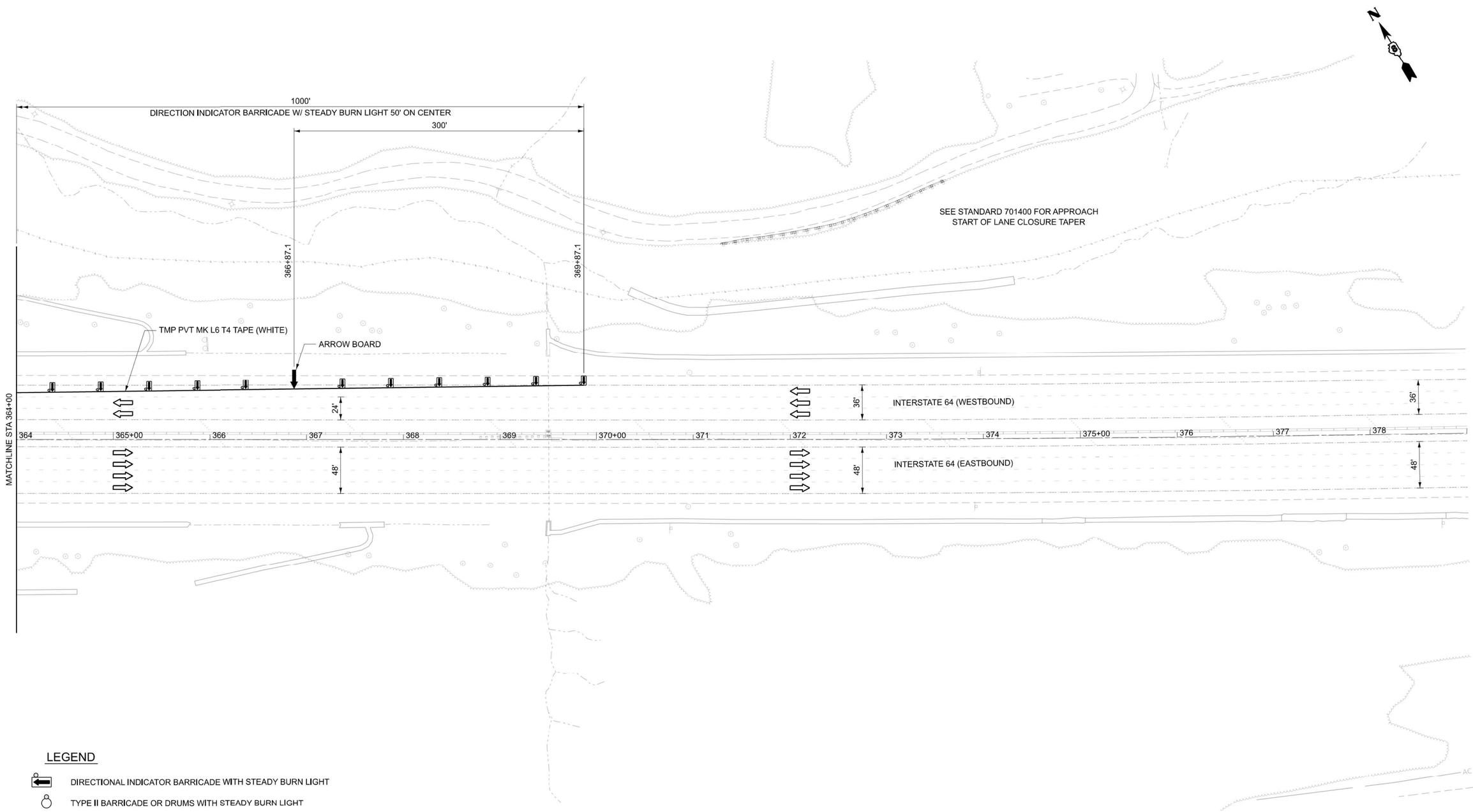

LEGEND

- DIRECTIONAL INDICATOR BARRICADE WITH STEADY BURN LIGHT
- TYPE II BARRICADE OR DRUMS WITH STEADY BURN LIGHT
- IMPACT ATTENUATOR
- TEMPORARY CONCRETE BARRIER
- LANE USE (DIRECTION)
- CONSTRUCTION (WORK) ZONE

0 50 100
SCALE IN FEET

MODEL: I64_CL - IL64_MOT-4 [Sheet]
FILE NAME: c:\bmskeg-pw-01\new user\dms27575\D876R89-sht-MOT.dgn

Kaskaskia Engineering Group, LLC
PROFESSIONAL REGISTRATIONS
Illinois Professional Design Firm 184.006710
Professional Engineering Group 20-5656586
200 E. Main St., Suite 300
Belleville, Illinois 62220
618.233.5077 phone
618.233.5977 fax
www.kaskaskieng.com

USER NAME = rjo	DESIGNED - RJO	REVISED -	
	DRAWN - RJO	REVISED -	
	CHECKED - EJL	REVISED -	
PLOT DATE = 11/25/2024	DATE -	REVISED -	

STATE OF ILLINOIS
DEPARTMENT OF TRANSPORTATION

SUGGESTED MAINTENANCE OF TRAFFIC - PRE-STAGE 1
S.N. 082-0306 (EB) & S.N. 082-0307 (WB)

SCALE: | SHEET 4 OF 4 SHEETS | STA. | TO STA.

F.A.I. RTE.	SECTION	COUNTY	TOTAL SHEETS	SHEET NO.
64	82-(4,5,6,7)-1RS-2	ST. CLAIR	388	109
		CONTRACT NO. 76R99		
	ILLINOIS	FED. AID PROJECT		

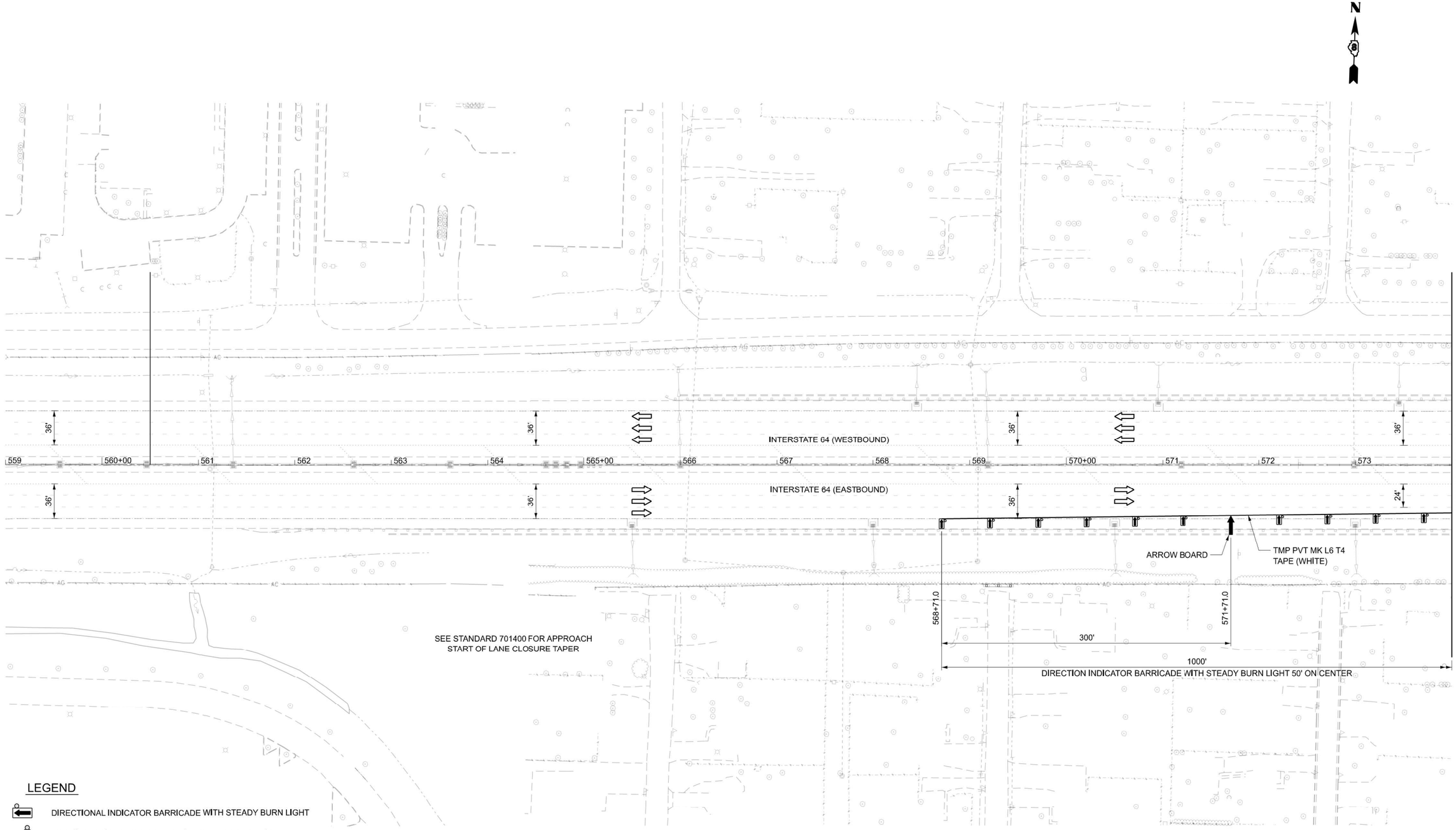

LEGEND

- DIRECTIONAL INDICATOR BARRICADE WITH STEADY BURN LIGHT
- TYPE II BARRICADE OR DRUMS WITH STEADY BURN LIGHT
- IMPACT ATTENUATOR
- TEMPORARY CONCRETE BARRIER
- LANE USE (DIRECTION)
- CONSTRUCTION (WORK) ZONE

0 50 100
SCALE IN FEET

MODEL: I64_CL - IL64_MOT-5 [Sheet]
FILE NAME: c:\bms\kesg-pw-01\new user\dms27575\D876R99-sht-MOT.dgn

Kaskaskia Engineering Group, LLC
200 E. Main St., Suite 300, Belleville, Illinois 62220
618.233.5077 phone
618.233.1977 fax
www.kaskaskiaeng.com
PROFESSIONAL REGISTRATIONS
Illinois Professional Design Firm 184.006773
Professional Engineering Group 20-5080186

USER NAME = rjo	DESIGNED - RJO	REVISED -
	DRAWN - RJO	REVISED -
	CHECKED - EJL	REVISED -
PLOT DATE = 11/25/2024	DATE -	REVISED -

STATE OF ILLINOIS
DEPARTMENT OF TRANSPORTATION

SUGGESTED MAINTENANCE OF TRAFFIC - PRE-STAGE 1
S.N. 082-0308 (EB) & S.N. 082-0309 (WB)

SCALE: | SHEET 1 OF 4 SHEETS | STA. | TO STA.

F.A.I. RTE.	SECTION	COUNTY	TOTAL SHEETS	SHEET NO.
64	82-(4,5,6,7)-1RS-2	ST. CLAIR	388	110
		CONTRACT NO. 76R99		
	ILLINOIS	FED. AID PROJECT		

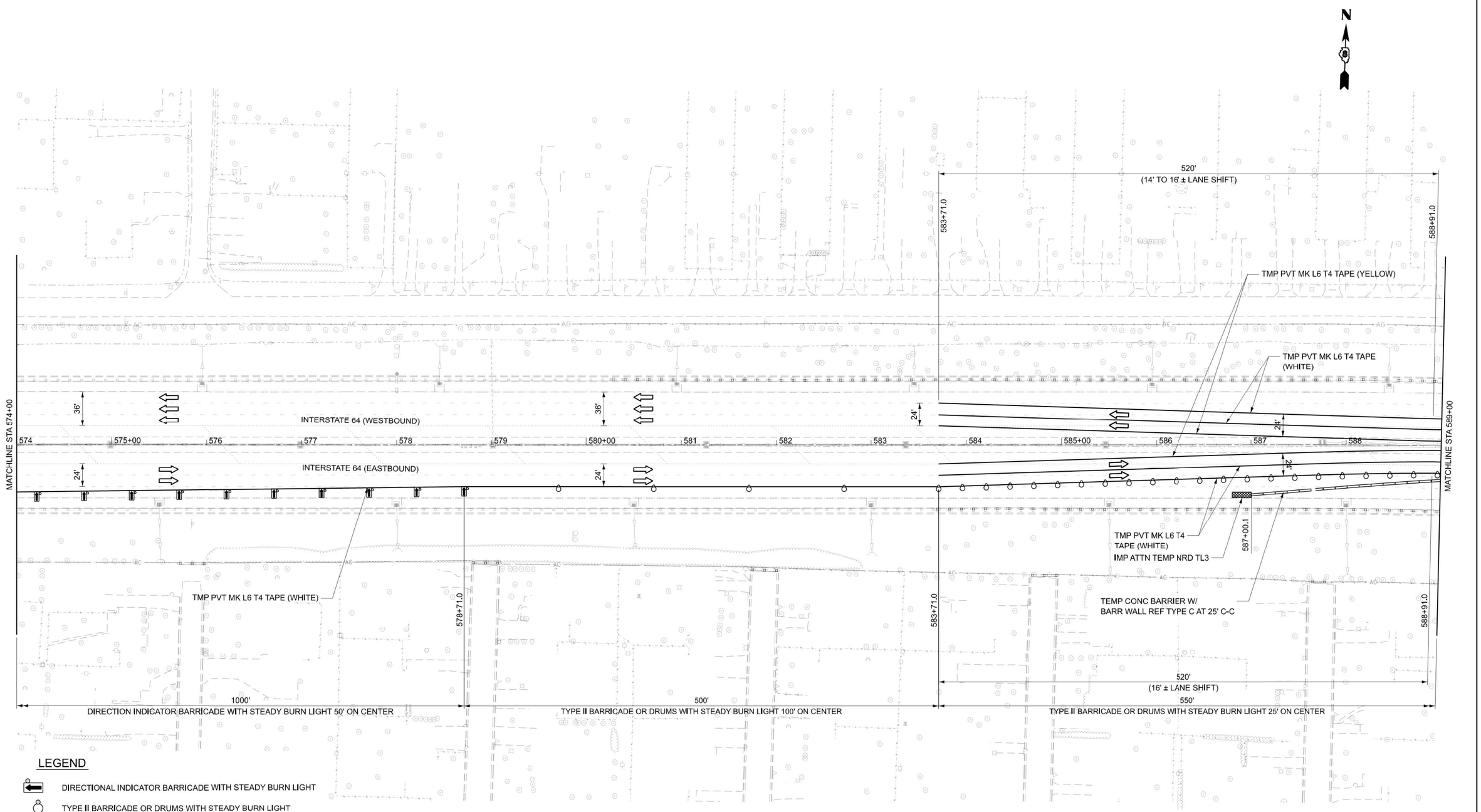

MODEL: I64_CL - IL64_MOT-6 [Sheet]
FILE NAME: c:\bms\kog-pw-01\new user\dms27575\D676R99-sht-MOT.dgn

Kaskaskia Engineering Group, LLC
PROFESSIONAL REGISTRATIONS: Illinois Professional Design Firm, Professional Engineering Group
LICENSE NO.: 184.006772, 20-5080586
200 E. Main St., Suite 300, Belleville, Illinois 62220
618.233.5077 phone, 618.233.1977 fax
www.kaskaskiaeng.com

USER NAME = rjo	DESIGNED - RJO	REVISED -	
	DRAWN - RJO	REVISED -	
	CHECKED - EJL	REVISED -	
PLOT DATE = 11/25/2024	DATE -	REVISED -	

STATE OF ILLINOIS
DEPARTMENT OF TRANSPORTATION

SUGGESTED MAINTENANCE OF TRAFFIC - PRE-STAGE 1
S.N. 082-0308 (EB) & S.N. 082-0309 (WB)

SCALE: | SHEET 2 OF 4 SHEETS | STA. | TO STA.

F.A.I. RTE.	SECTION	COUNTY	TOTAL SHEETS	SHEET NO.
64	82-(4,5,6,7)-1RS-2	ST. CLAIR	388	111
		CONTRACT NO. 76R99		
	ILLINOIS	FED. AID PROJECT		

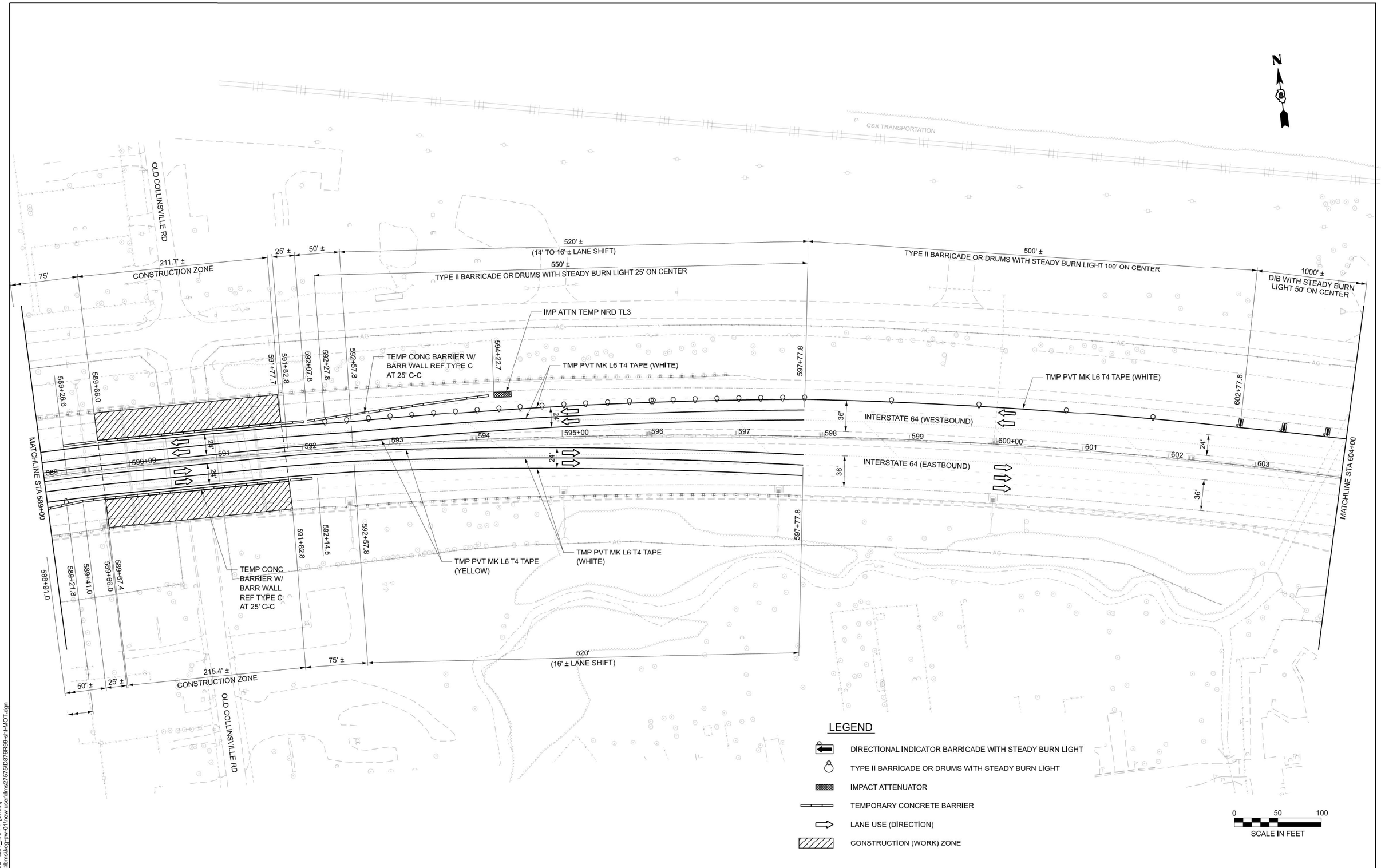

MODEL: I64_CL - IL64_MOT-7 [Sheet]
FILE NAME: c:\bms\keg-pw-01\new user\dms27575\D876R99-sht-MOT.dgn

Kaskaskia Engineering Group, LLC
208 E. Main St., Suite 100
Belleville, Illinois 62220
618.233.5877 phone
618.233.5977 fax
www.kaskaskiaeng.com
PROFESSIONAL REGISTRATIONS
Illinois Professional Design Firm
Professional Engineering Group
LICENSE NO.
184.000773
20-5080586

USER NAME = rjo	DESIGNED - RJO	REVISED -	
	DRAWN - RJO	REVISED -	
	CHECKED - EJL	REVISED -	
PLOT DATE = 11/25/2024	DATE -	REVISED -	

STATE OF ILLINOIS
DEPARTMENT OF TRANSPORTATION

SUGGESTED MAINTENANCE OF TRAFFIC - PRE-STAGE 1
S.N. 082-0308 (EB) & S.N. 082-0309 (WB)

SCALE: | SHEET 3 OF 4 SHEETS | STA. | TO STA.

F.A.I. RTE.	SECTION	COUNTY	TOTAL SHEETS	SHEET NO.
64	82-(4,5,6,7)-1RS-2	ST. CLAIR	388	112
		CONTRACT NO. 76R99		
		ILLINOIS	FED. AID PROJECT	

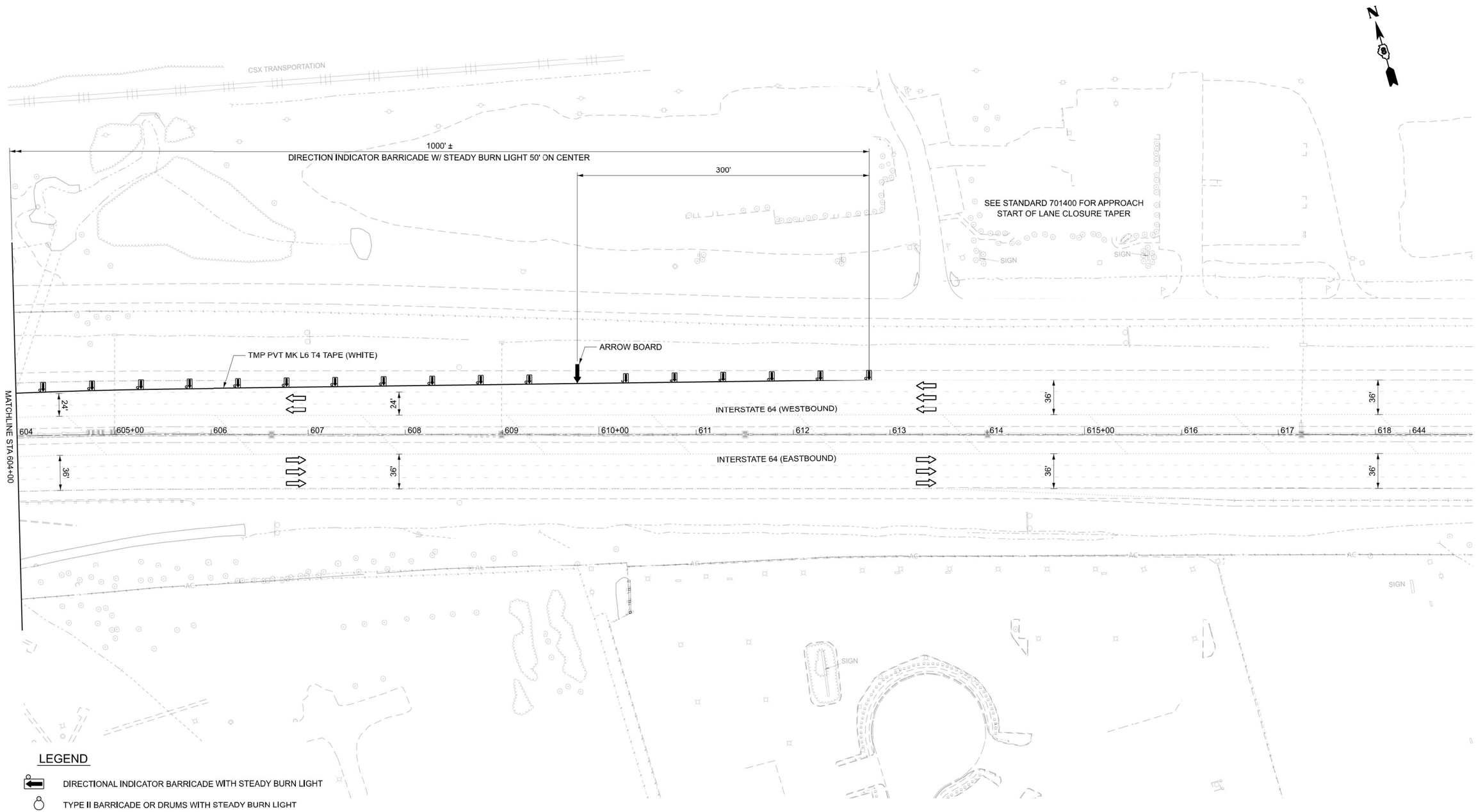

LEGEND

- DIRECTIONAL INDICATOR BARRICADE WITH STEADY BURN LIGHT
- TYPE II BARRICADE OR DRUMS WITH STEADY BURN LIGHT
- IMPACT ATTENUATOR
- TEMPORARY CONCRETE BARRIER
- LANE USE (DIRECTION)
- CONSTRUCTION (WORK) ZONE

0 50 100
SCALE IN FEET

MODEL: I64_CL - IL64_MOT-8 [Sheet]
FILE NAME: c:\bms\keg-pw-01\new user\dms27575\D876R99-sht-MOT.dgn

Kaskaskia Engineering Group, LLC
208 E. Main St., Suite 300
Belleville, Illinois 62220
618.233.5877 phone
618.233.5977 fax
www.kaskaskiaeng.com
PROFESSIONAL REGISTRATIONS
Illinois Professional Design Firm
Professional Engineering Group
LICENSE NO.
184.000713
20-5080586

USER NAME = rjo	DESIGNED - RJO	REVISED -	
	DRAWN - RJO	REVISED -	
	CHECKED - EJL	REVISED -	
PLOT DATE = 11/25/2024	DATE -	REVISED -	

STATE OF ILLINOIS
DEPARTMENT OF TRANSPORTATION

SUGGESTED MAINTENANCE OF TRAFFIC - PRE-STAGE 1
S.N. 082-0308 (EB) & S.N. 082-0309 (WB)

SCALE: SHEET 4 OF 4 SHEETS STA. TO STA.

F.A.I. RTE.	SECTION	COUNTY	TOTAL SHEETS	SHEET NO.
64	82-(4,5,6,7)-1RS-2	ST. CLAIR	388	113
		CONTRACT NO. 76R99		
		ILLINOIS	FED. AID PROJECT	

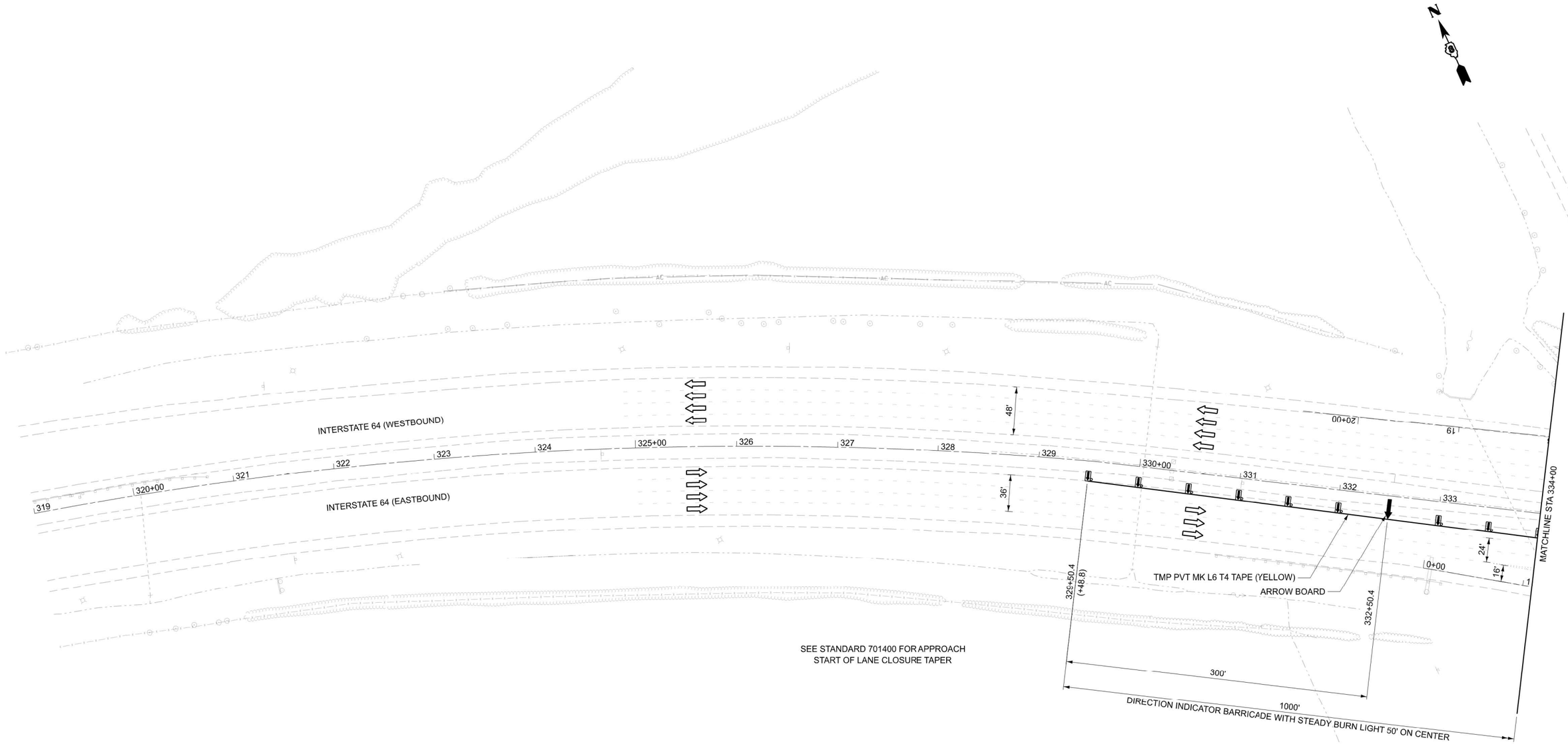

LEGEND

- DIRECTIONAL INDICATOR BARRICADE WITH STEADY BURN LIGHT
- TYPE II BARRICADE OR DRUMS WITH STEADY BURN LIGHT
- IMPACT ATTENUATOR
- TEMPORARY CONCRETE BARRIER
- LANE USE (DIRECTION)
- CONSTRUCTION (WORK) ZONE

MODEL: I64_CL - IL64_MOT-1 S2 [Sheet]
FILE NAME: c:\bmskeg-pw-01\new user\3ms2757\D876R99-sht-MOT-Stage 2.dgn

Kaskaskia Engineering Group, LLC
PROFESSIONAL REGISTRATIONS
Illinois Professional Design Firm 184.006773
Professional Engineering Group 20-5008306
200 E. Main St., Suite 300
Belleville, Illinois 62220
618.233.5077 phone
618.233.5077 fax
www.kaskaskiaeng.com
LICENSE NO.

USER NAME = rjo	DESIGNED - RJO	REVISED -	
	DRAWN - RJO	REVISED -	
	CHECKED - EJL	REVISED -	
PLOT DATE = 11/25/2024	DATE -	REVISED -	

STATE OF ILLINOIS
DEPARTMENT OF TRANSPORTATION

SUGGESTED MAINTENANCE OF TRAFFIC - PRE-STAGE 2
S.N. 082-0306 (EB) & S.N. 082-0307 (WB)

SCALE: | SHEET 1 OF 4 SHEETS | STA. | TO STA.

F.A.I. RTE.	SECTION	COUNTY	TOTAL SHEETS	SHEET NO.
64	82-(4,5,6,7)-1RS-2	ST. CLAIR	388	114
		CONTRACT NO. 76R99		
	ILLINOIS	FED. AID PROJECT		

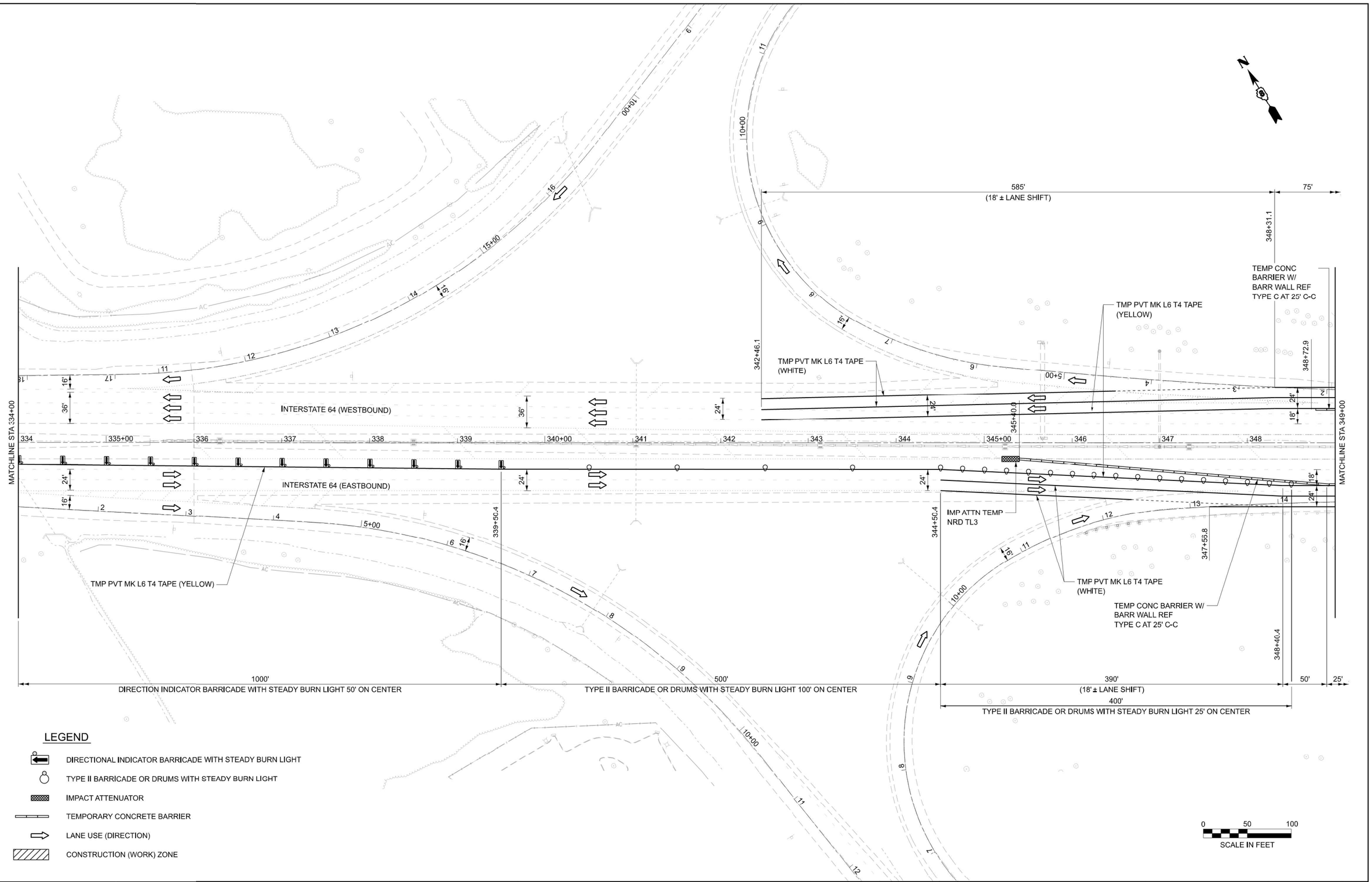

MODEL: I64_CL - IL64_MOT-2 S2 [Sheet]
FILE NAME: c:\bms\kegi-pw-01\new user\dms275751\D876R99-sht-MOT-Stage 2.dgn

Kaskaskia Engineering Group, LLC
PROFESSIONAL REGISTRATIONS
Illinois Professional Design Firm
Professional Engineering Group
LICENSE NO.
184.006715
20-5006586

USER NAME = rjo	DESIGNED - RJO	REVISED -	
	DRAWN - RJO	REVISED -	
	CHECKED - EJL	REVISED -	
PLOT DATE = 11/25/2024	DATE -	REVISED -	

STATE OF ILLINOIS
DEPARTMENT OF TRANSPORTATION

SUGGESTED MAINTENANCE OF TRAFFIC - PRE-STAGE 2
S.N. 082-0306 (EB) & S.N. 082-0307 (WB)

SCALE: | SHEET 2 OF 4 SHEETS | STA. | TO STA.

F.A.I. RTE.	SECTION	COUNTY	TOTAL SHEETS	SHEET NO.
64	82-(4,5,6,7)-1RS-2	ST. CLAIR	388	115
		CONTRACT NO. 76R99		
	ILLINOIS	FED. AID PROJECT		

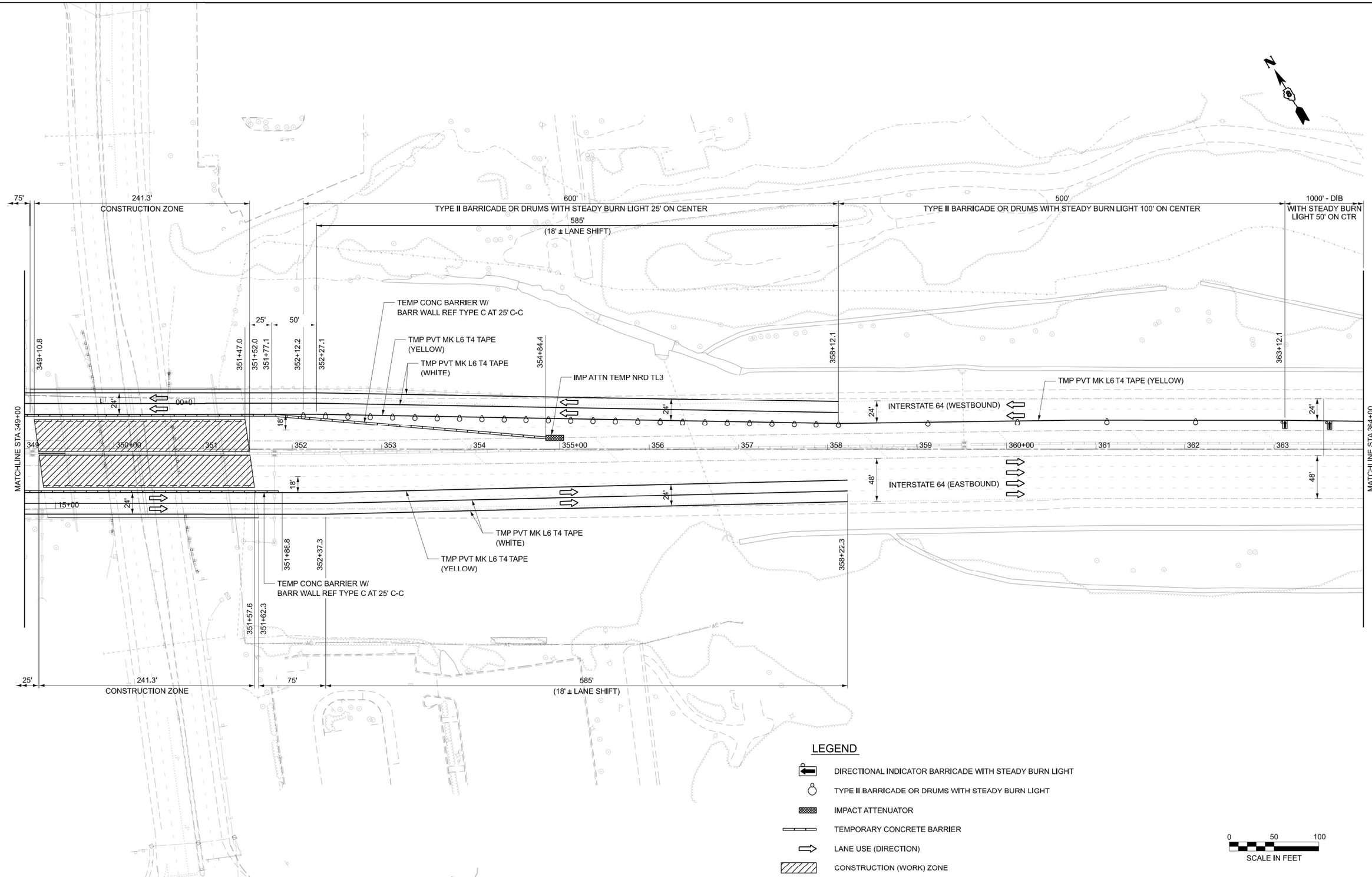

MODEL: I64_CL - IL64_MOT-3 S2 [Sheet]
FILE NAME: c:\bms\keg-pw-01\new user\dms27575\D876R99-sht-MOT-Stage 2.dgn

Kaskaskia Engineering Group, LLC
PROFESSIONAL REGISTRATIONS
Illinois Professional Design Firm
Professional Engineering Group
208 E. Main St., Suite 100
Belleville, Illinois 62220
618.233.1877 phone
618.233.1977 fax
www.kaskaskiaeng.com
LICENSE NO.
184.000773
20-5080586

USER NAME = rjo	DESIGNED - RJO	REVISED -	
	DRAWN - RJO	REVISED -	
	CHECKED - RJO	REVISED -	
PLOT DATE = 11/25/2024	DATE -	REVISED -	

STATE OF ILLINOIS
DEPARTMENT OF TRANSPORTATION

SUGGESTED MAINTENANCE OF TRAFFIC - PRE-STAGE 2
S.N. 082-0306 (EB) & S.N. 082-0307 (WB)

SCALE: | SHEET 3 OF 4 SHEETS | STA. | TO STA.

F.A.I. RTE.	SECTION	COUNTY	TOTAL SHEETS	SHEET NO.
64	82-(1,5,6,7)-1RS-2	ST. CLAIR	388	116
		CONTRACT NO. 76R99		
		ILLINOIS	FED. AID PROJECT	

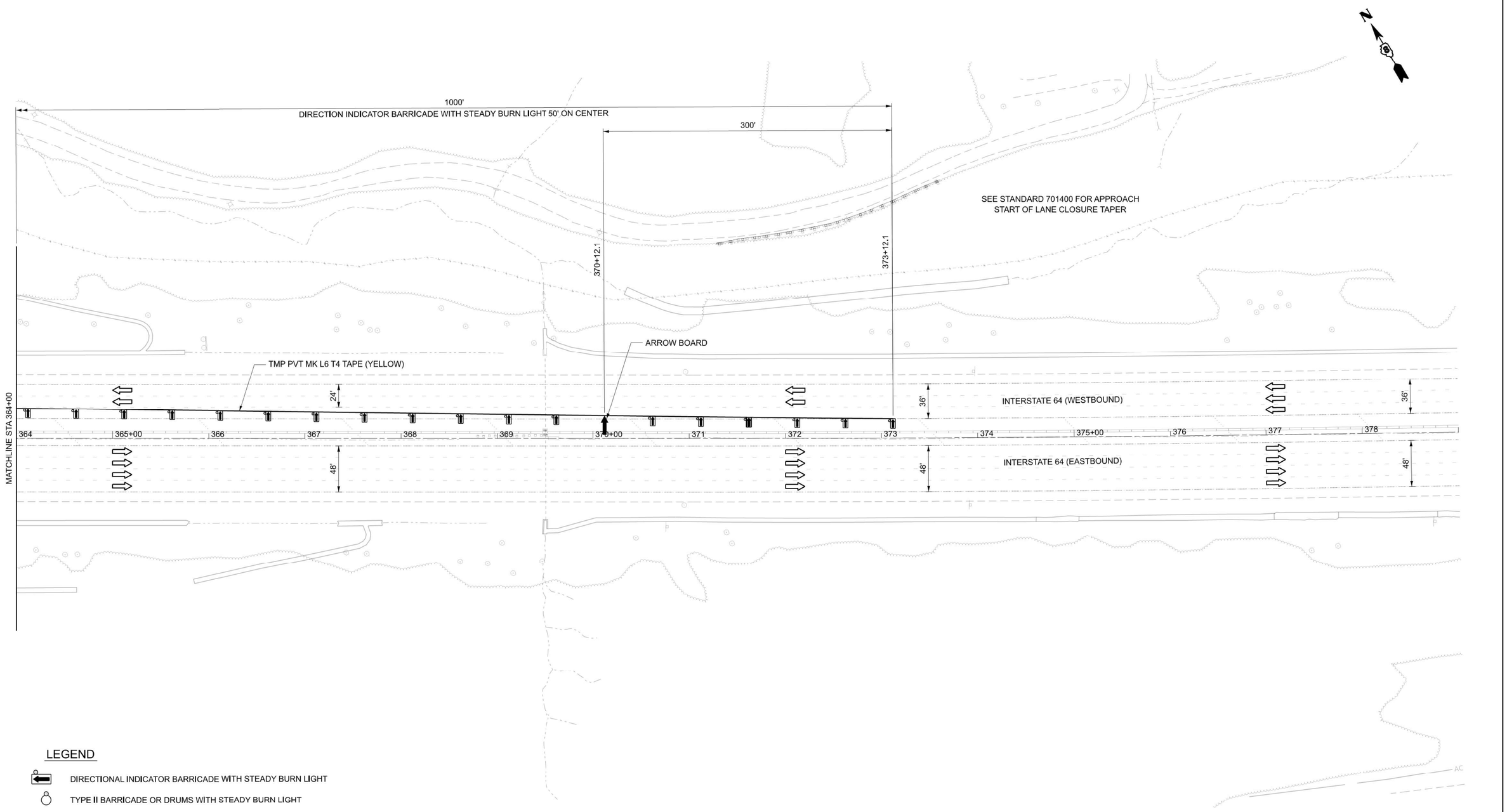

LEGEND

- DIRECTIONAL INDICATOR BARRICADE WITH STEADY BURN LIGHT
- TYPE II BARRICADE OR DRUMS WITH STEADY BURN LIGHT
- IMPACT ATTENUATOR
- TEMPORARY CONCRETE BARRIER
- LANE USE (DIRECTION)
- CONSTRUCTION (WORK) ZONE

MODEL: I64_CL - IL64_MOT-4 S2 [Sheet]
FILE NAME: c:\bms\keg-pw-01\new user\dms27575\D876R99-sht-MOT-Stage 2.dgn

Kaskaskia Engineering Group, LLC
208 E. Main St., Suite 100
Belleville, Illinois 62220
618.233.5877 phone
618.233.5977 fax
www.kaskaskiaeng.com
PROFESSIONAL REGISTRATIONS
Illinois Professional Design Firm
Professional Engineering Group
LICENSE NO.
184.006773
20-5008586

USER NAME = rjo	DESIGNED - RJO	REVISED -	
	DRAWN - RJO	REVISED -	
	CHECKED - EJL	REVISED -	
PLOT DATE = 11/26/2024	DATE -	REVISED -	

STATE OF ILLINOIS
DEPARTMENT OF TRANSPORTATION

SUGGESTED MAINTENANCE OF TRAFFIC - PRE-STAGE 2
S.N. 082-0306 (EB) & S.N. 082-0307 (WB)

SCALE: | SHEET 4 OF 4 SHEETS | STA. | TO STA.

F.A.I. RTE.	SECTION	COUNTY	TOTAL SHEETS	SHEET NO.
64	82-(4,5,6,7)-1RS-2	ST. CLAIR	388	117
		CONTRACT NO. 76R99		
		ILLINOIS	FED. AID PROJECT	

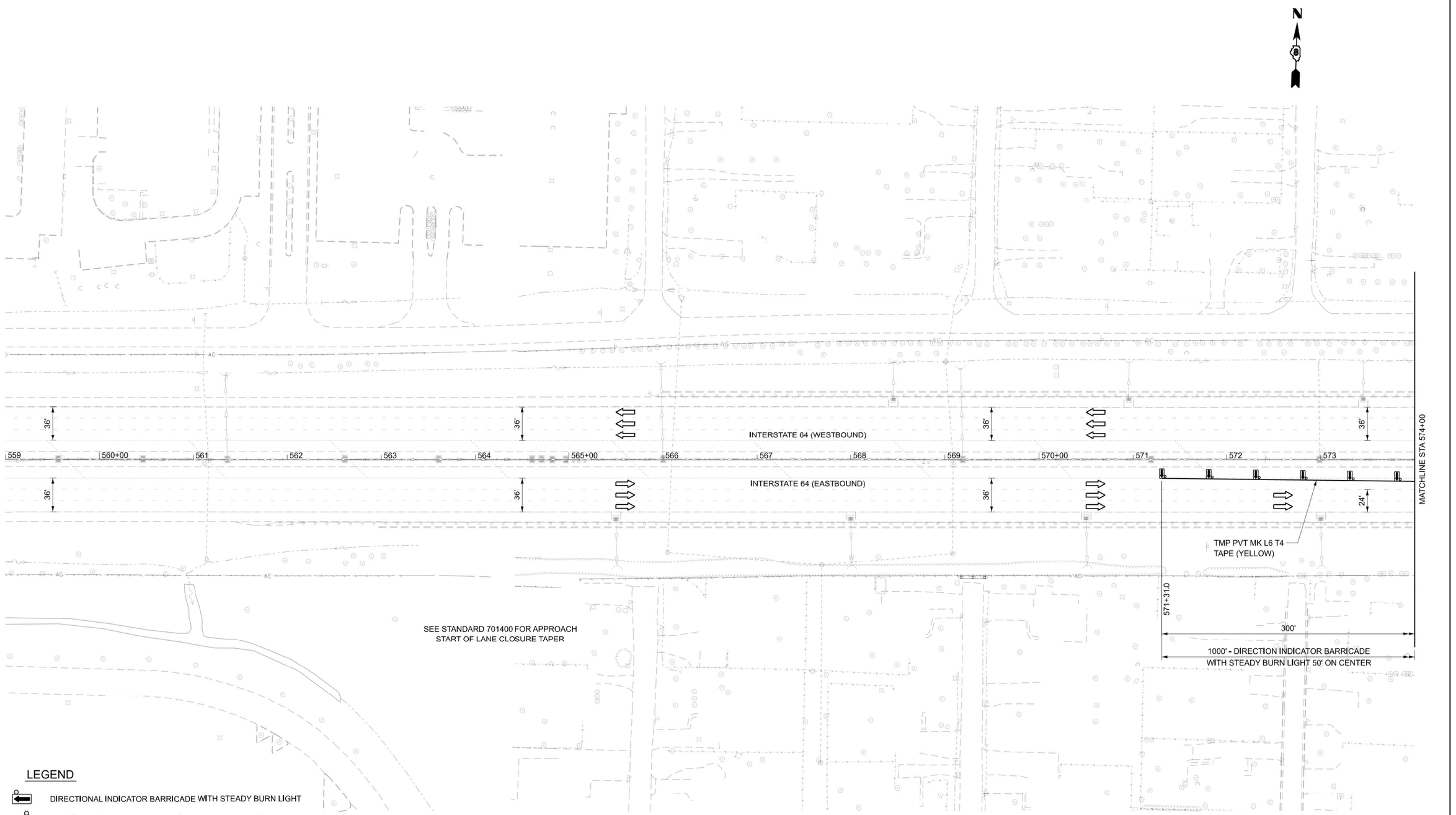

LEGEND

- DIRECTIONAL INDICATOR BARRICADE WITH STEADY BURN LIGHT
- TYPE II BARRICADE OR DRUMS WITH STEADY BURN LIGHT
- IMPACT ATTENUATOR
- TEMPORARY CONCRETE BARRIER
- LANE USE (DIRECTION)
- CONSTRUCTION (WORK) ZONE

MODEL: I64_CL - IL64_MOT-5 S2 [Sheet]
FILE NAME: c:\bms\kep-pw-01\new user\dms27575\D876R99-int-MOT-Stage 2.dgn

Kaskaskia Engineering Group, LLC
PROFESSIONAL REGISTRATIONS
Illinois Professional Design Firm 184.004773
Professional Engineering Group 20-5008186
200 E. Main St., Suite 300
Belleville, Illinois 62220
618.233.5077 phone
618.233.1977 fax
www.kaskaskiaeng.com

USER NAME = rjo	DESIGNED - RJO	REVISED -	
	DRAWN - RJO	REVISED -	
	CHECKED - EJL	REVISED -	
PLOT DATE = 11/26/2024	DATE -	REVISED -	

STATE OF ILLINOIS
DEPARTMENT OF TRANSPORTATION

SUGGESTED MAINTENANCE OF TRAFFIC - PRE-STAGE 2
S.N. 082-0308 (EB) & S.N. 082-0309 (WB)

SCALE: | SHEET 1 OF 4 SHEETS | STA. | TO STA.

F.A.I. RTE.	SECTION	COUNTY	TOTAL SHEETS	SHEET NO.
64	82 (4,6,6,7) 1RS 2	ST. CLAIR	388	118
		CONTRACT NO. 76R99		
	ILLINOIS	FED. AID PROJECT		

N

260'
(8' ± LANE SHIFT)

TMP PVT MK L6 T4 TAPE (YELLOW)

TMP PVT MK L6
T4 TAPE (WHITE)

586+31.0

588+91.0

36'

INTERSTATE 64 (WESTBOUND)

24'

574 575+00 576 577 578 579 580+00 581 582 583 584 585+00 586 586+83 587 588

MATCHLINE STA 574+00

MATCHLINE STA 589+00

24'

INTERSTATE 64 (EASTBOUND)

TMP PVT MK L6 T4 TAPE (YELLOW)

IMP ATTN TEMP
NRD TL3

TMP PVT MK L6 T4
TAPE (WHITE)

TEMP CONC BARRIER W/
BARR WALL REF TYPE C AT 25' C-C

574+31.0

581+31.0

586+31.0

586+91.0

260'
(7' TO 8' ± LANE SHIFT)

1000'
DIRECTION INDICATOR BARRICADE WITH STEADY BURN LIGHT 50' ON CENTER

500'
TYPE II BARRICADE OR DRUMS WITH STEADY BURN LIGHT 100' ON CENTER

300' - TYPE II BARRICADE OR DRUMS
WITH STEADY BURN LIGHT 25' ON CENTER

LEGEND

- DIRECTIONAL INDICATOR BARRICADE WITH STEADY BURN LIGHT
- TYPE II BARRICADE OR DRUMS WITH STEADY BURN LIGHT
- IMPACT ATTENUATOR
- TEMPORARY CONCRETE BARRIER
- LANE USE (DIRECTION)
- CONSTRUCTION (WORK) ZONE

0 50 100
SCALE IN FEET

MODEL: I64_CL - IL64_MOT-6 S2 [Sheet]
FILE NAME: c:\bms\kep-pw-01\new user\dms27575\D876R99~int-MOT-Stage 2.dgn

Kaskaskia Engineering Group, LLC
PROFESSIONAL REGISTRATIONS
Illinois Professional Design Firm 184.004773
Professional Engineering Group 20-5008186
200 E. Main St., Suite 300
Belleville, Illinois 62220
618.233.5077 phone
618.233.5977 fax
www.kaskaskiaeng.com

USER NAME = rjo	DESIGNED - RJO	REVISED -	
	DRAWN - RJO	REVISED -	
	CHECKED - EJL	REVISED -	
PLOT DATE = 11/26/2024	DATE -	REVISED -	

STATE OF ILLINOIS
DEPARTMENT OF TRANSPORTATION

SUGGESTED MAINTENANCE OF TRAFFIC - PRE-STAGE 2
S.N. 082-0308 (EB) & S.N. 082-0309 (WB)

SCALE: | SHEET 2 OF 4 SHEETS | STA. | TO STA.

F.A.I. RTE.	SECTION	COUNTY	TOTAL SHEETS	SHEET NO.
64	82-(4,5,6,7)-1RS-2	ST. CLAIR	388	119
		CONTRACT NO. 76R99		
	ILLINOIS	FED. AID PROJECT		

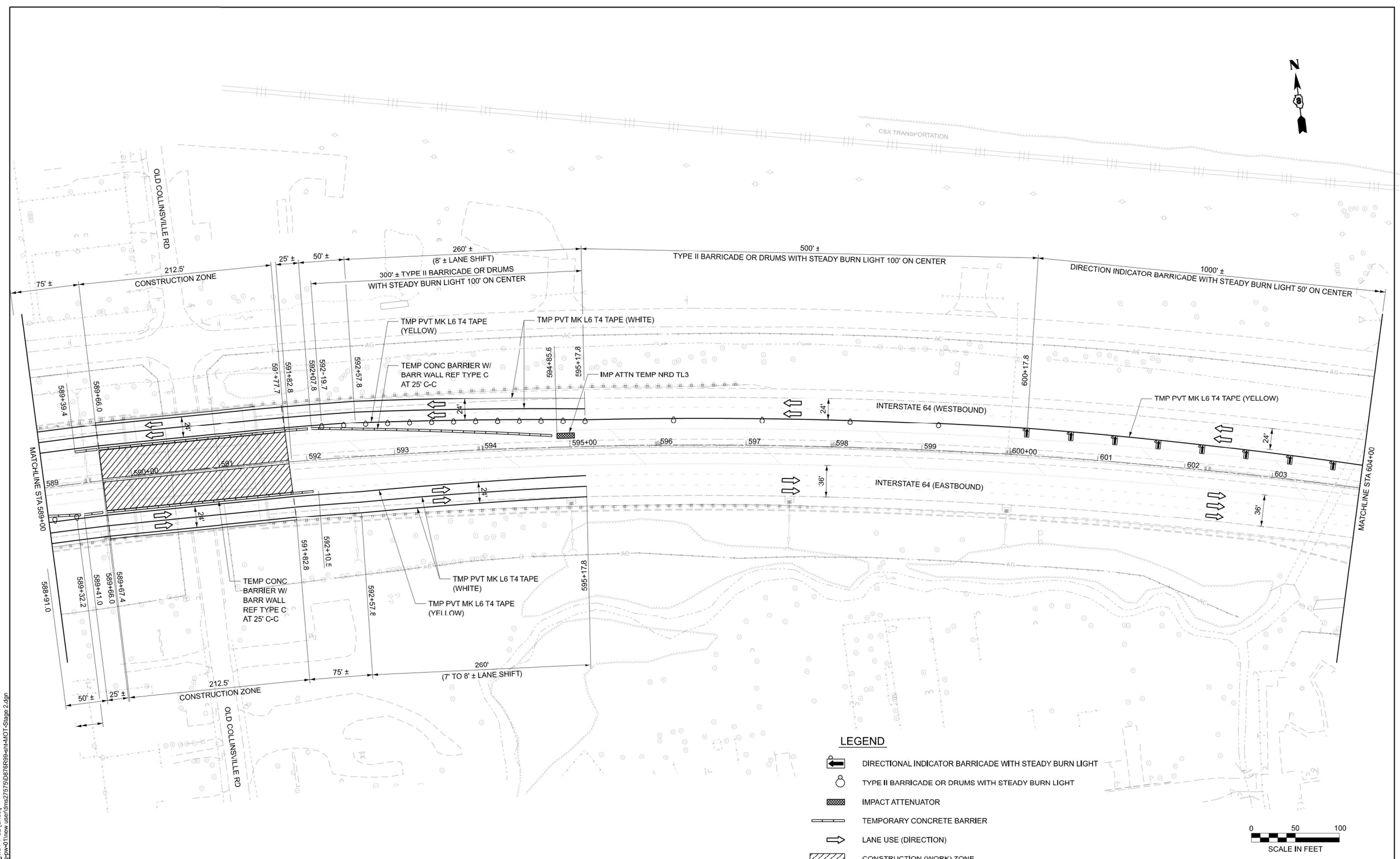

MODEL: I64_CL - IL64_MOT-7 S2 [Sheet]
FILE NAME: c:\bms\keg-pw-01\new user\dms27575\D876R89-sht-MOT-Stage 2.dgn

Kaskaskia Engineering Group, LLC
PROFESSIONAL REGISTRATIONS
Illinois Professional Design Firm
Professional Engineering Group
LICENSE NO.
184.006710
20-3686586
200 E. Main St., Suite 300
Belleville, Illinois 62220
618.233.5077 phone
618.233.1977 fax
www.kaskaskiaeng.com

USER NAME = rjo	DESIGNED - RJO	REVISED -
	DRAWN - RJO	REVISED -
	CHECKED - EJL	REVISED -
PLOT DATE = 11/26/2024	DATE -	REVISED -

STATE OF ILLINOIS
DEPARTMENT OF TRANSPORTATION

SUGGESTED MAINTENANCE OF TRAFFIC - PRE-STAGE 2
S.N. 082-0308 (EB) & S.N. 082-0309 (WB)

SCALE: | SHEET 3 OF 4 SHEETS | STA. | TO STA.

F.A.I. RTE.	SECTION	COUNTY	TOTAL SHEETS	SHEET NO.
64	82-(4,5,6,7)-1RS-2	ST. CLAIR	388	120
		CONTRACT NO. 76R99		
	ILLINOIS	FED. AID PROJECT		

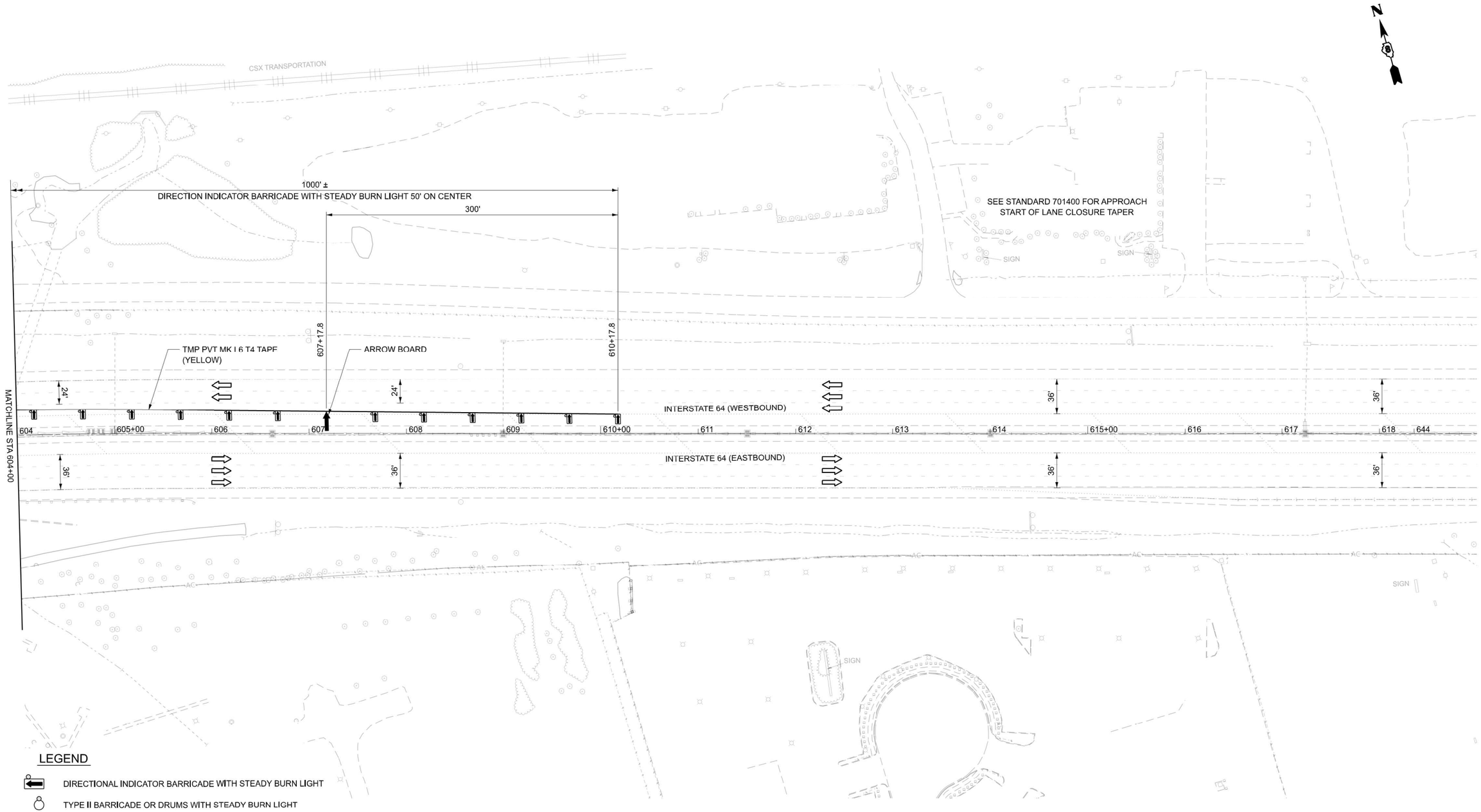

LEGEND

- DIRECTIONAL INDICATOR BARRICADE WITH STEADY BURN LIGHT
- TYPE II BARRICADE OR DRUMS WITH STEADY BURN LIGHT
- IMPACT ATTENUATOR
- TEMPORARY CONCRETE BARRIER
- LANE USE (DIRECTION)
- CONSTRUCTION (WORK) ZONE

0 50 100
SCALE IN FEET

MODEL: I64_CL - IL64_MOT-8 S2 [Sheet]
FILE NAME: c:\bms\keg-pw-01\new user\dms27575\D876R99-sht-MOT-Stage 2.dgn

Kaskaskia Engineering Group, LLC
208 E. Main St., Suite 100
Belleville, Illinois 62220
618.233.5077 phone
618.233.5977 fax
www.kaskaskiaeng.com
PROFESSIONAL REGISTRATIONS
Illinois Professional Design Firm
Professional Engineering Group
LICENSE NO.
184.000713
20-5080586

USER NAME = rjo	DESIGNED - RJO	REVISED -	
	DRAWN - RJO	REVISED -	
	CHECKED - EJL	REVISED -	
PLOT DATE = 11/26/2024	DATE -	REVISED -	

STATE OF ILLINOIS
DEPARTMENT OF TRANSPORTATION

SUGGESTED MAINTENANCE OF TRAFFIC - PRE-STAGE 2
S.N. 082-0308 (EB) & S.N. 082-0309 (WB)

SCALE: SHEET 4 OF 4 SHEETS STA. TO STA.

F.A.I. RTE.	SECTION	COUNTY	TOTAL SHEETS	SHEET NO.
64	82-(4,5,6,7)-1RS-2	ST.CLAIR	388	121
		CONTRACT NO. 76R99		
		ILLINOIS	FED. AID PROJECT	

MAINTENANCE OF TRAFFIC GENERAL NOTES

1. THE TEMPORARY TRAFFIC CONTROL DEPICTED HEREIN IS THE MINIMUM REQUIREMENT. ADDITIONAL TRAFFIC CONTROL DEVICES AS SPECIFIED IN THE HIGHWAY STANDARDS AS SHOWN IN THE INDEX OF SHEETS AND THE SPECIAL PROVISION SHALL BE PLACED BY THE CONTRACTOR TO THE SATISFACTION OF THE ENGINEER. ALL TRAFFIC CONTROL DEVICES SHALL BE CONSIDERED INCLUDED IN THE COST OF TRAFFIC CONTROL AND PROTECTION UNLESS OTHERWISE INDICATED WITHIN THESE GENERAL NOTES, PLANS OR SPECIAL PROVISIONS.

2. THE CONTRACTOR SHALL FURNISH, INSTALL, MAINTAIN AND REMOVE ALL SIGNS AND SIGN SUPPORTS REQUIRED FOR TRAFFIC CONTROL AND PROTECTION.

3. THE CONTRACTOR SHALL BE RESPONSIBLE FOR PROVIDING LABOR, SIGNS AND TRAFFIC CONTROL DEVICES NECESSARY FOR THE MAINTENANCE OF TRAFFIC UNLESS NOTED OTHERWISE IN THE SPECIAL PROVISIONS.

4. THE CONTRACTOR SHALL CONTACT THE DISTRICT EIGHT TRAFFIC CONTROL SUPERVISOR AT (XXX) XXX-XXXX A MINIMUM OF 72 HOURS IN ADVANCE OF BEGINNING THE WORK.

5. ALL EXISTING SIGNS THAT CONFLICT WITH THE TRAFFIC CONTROL PLAN SHALL BE COVERED OR REMOVED IN ACCORDANCE WITH ARTICLE 107.25 OF THE STANDARD SPECIFICATIONS.

6. THE CONTRACTOR SHALL BE REQUIRED TO MAINTAIN TRAFFIC IN ACCORDANCE WITH THE TRAFFIC CONTROL PLANS, SPECIAL PROVISIONS, APPLICABLE STATE STANDARDS, AND AS DIRECTED BY THE ENGINEER. ANY CHANGES TO THE TRAFFIC CONTROL SHALL BE SUBMITTED TO THE ENGINEER FOR APPROVAL PRIOR TO IMPLEMENTING ANY CHANGES.

7. TRAFFIC CONDITIONS, ACCIDENTS, AND OTHER UNFORESEEN EMERGENCY CONDITIONS MAY REQUIRE THE ENGINEER TO RESTRICT, MODIFY OR REMOVE LANE CLOSURES OR CHANNELIZATION SHOWN IN THE PLANS. THE CONTRACTOR SHALL PROMPTLY RESPOND AT THE TIME OF NOTIFICATION BY THE ENGINEER FOR THE MAINTENANCE OF TRAFFIC CONTROL DEVICES.

8. THE ENGINEER SHALL BE INFORMED A MINIMUM OF 48 HOURS IN ADVANCE OF ANY PROPOSED CHANGE TO THE SUGGESTED STAGES OF CONSTRUCTION AND TRAFFIC CONTROL PLANS.

9. ALL TRAFFIC CONTROL DEVICES SHALL BE REMOVED, COVERED OR TURNED AWAY FROM THE TRAFFIC IMMEDIATELY WHEN THEY ARE NO LONGER NECESSARY.

10. IMMEDIATELY AFTER THE COMPLETION OF CONSTRUCTION, THE CONTRACTOR SHALL RESTORE ALL PERMANENT PAVEMENT MARKINGS, SIGNS, AND OTHER TRAFFIC CONTROL DEVICES THAT WERE COVERED, REMOVED, DAMAGED OR OTHERWISE AFFECTED BY CONSTRUCTION.

11. THE CONTRACTOR SHALL INSTALL ROAD CONSTRUCTION AHEAD SIGNS ON THE ENTRANCE RAMPS FROM I-64.

12. THE CONTRACTOR SHALL REQUEST AND GAIN APPROVAL FROM THE ILLINOIS DEPARTMENT OF TRANSPORTATION'S EXPRESSWAY TRAFFIC OPERATION ENGINEER AT WWW.IDOTLCS.COM TWENTY-FOUR (24) HOURS IN ADVANCE OF ALL DAILY LANE, RAMP AND SHOULDER CLOSURES AND 7 DAYS IN ADVANCE OF ALL PERMANENT AND WEEKEND CLOSURES ON ALL FREEWAYS AND/OR EXPRESSWAYS. THIS ADVANCE NOTIFICATION IS CALCULATED BASED ON A WORKWEEK OF MONDAY THROUGH FRIDAY AND SHALL NOT INCLUDE WEEKENDS OR HOLIDAYS.

13. ALL TRAFFIC CONTROL DEVICES INCLUDING, BUT NOT LIMITED TO DRUMS, VERTICAL PANELS, AND BARRICADES IMMEDIATELY ADJACENT TO THE EDGE OF THE TRAVELLED WAY SHALL BE EQUIPPED WITH MONO-DIRECTIONAL STEADY BURNING LIGHTS.

SEQUENCING NOTES:

STAGE 1:

CONSTRUCTION:
ALONG NB/SB IL ROUTE 159 OUTSIDE LANE, TURN LANES AND SHOULDER, SCARIFY EXISTING BRIDGE DECK AND REPLACE WITH LATEX CONCRETE OVERLAY.
TRAFFIC CONTROL:
USE LANE CLOSURES STANDARD 701423 AND 701602 TO CLOSE OUTSIDE LANE","TURN LANE AND SHOULDER.

CLOSE OUTSIDE LANES NB AND SB AS SHOWN ON THE STAGE 1 PLANS.

STAGE 2:

CONSTRUCTION:
ALONG NB/SB IL ROUTE 159 INSIDE LANE AND SHOULDER, SCARIFY EXISTING BRIDGE DECK AND REPLACE WITH LATEX CONCRETE OVERLAY.

TRAFFIC CONTROL:
USE LANE CLOSURES STANDARD 701423 AND 701602 TO CLOSE INSIDE LANE AND SHIFT TRAFFIC.

CLOSE INSIDE LANES NB AND SB AS SHOWN ON THE STAGE 2 PLANS.

MODEL: 0876R99 MOT STAGING AND GENERAL NOTES
FILE NAME: J:\2023\6044\WO 6\CADD Data\Sheets\D876R99-MOT STAGING AND GENERAL NOTES.dgn

ABNA DESIGN FIRM REG. 184.002117
745 McClintock Drive
Suite 210
Burr Ridge, IL 60527
Ph. 773-681-4788
Fax: 773-239-3728

USER NAME = aasyed	DESIGNED - CT	REVISED -
	DRAWN - MC, AS	REVISED -
PLOT SCALE = 1.99999600 ' / in.	CHECKED - TPP	REVISED -
PLOT DATE = 9/17/2024	DATE -	REVISED -

STATE OF ILLINOIS
DEPARTMENT OF TRANSPORTATION

MAINTENANCE OF TRAFFIC
STAGING AND GENERAL NOTES

SCALE: NONE | SHEET 1 OF 10 SHEETS | STA. | TO STA.

F.A.I RTE.	SECTION	COUNTY	TOTAL SHEETS	SHEET NO.
64	82-(4,5,6,7)-1RS-2	ST CLAIR	388	122
		CONTRACT NO. 76R99		
	ILLINOIS	FED. AID PROJECT		

NOTES:

1. MONO-DIRECTIONAL TYPE C REFLECTORS TO BE INSTALLED PER STD. 704001 AND 782006.

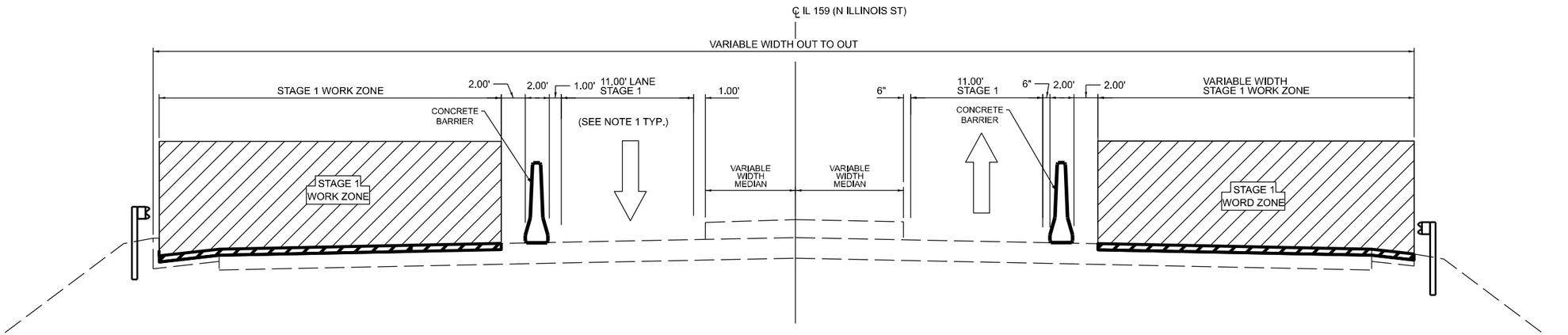

STAGE 1 TYPICAL

IL 159 (N ILLINOIS ST) - LOOKING NORTHBOUND AT I-64

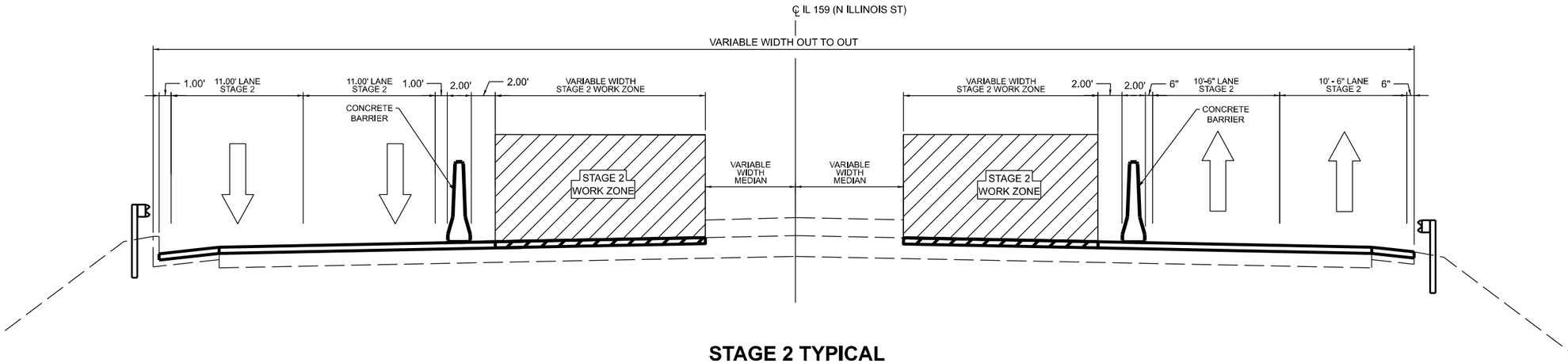

STAGE 2 TYPICAL

IL 159 (N ILLINOIS ST) - LOOKING NORTHBOUND AT I-64

MODEL: 0876R99 MOT TYPICALS
FILE NAME: J:\2023\6044\WO 6\CADD Data\Sheets\D876R99-MOT STAGING AND GENERAL NOTES.dgn

ABNA DESIGN FIRM REG. 184.002117
745 McClintock Drive
Suite 210
Burr Ridge, IL 60527
Ph. 773-681-4788
Fax: 773-239-3728

USER NAME = aasyed	DESIGNED - CT	REVISED -	
	DRAWN - MC, AS	REVISED -	
PLOT SCALE = 1.99999600 ' / in.	CHECKED - TPP	REVISED -	
PLOT DATE = 9/17/2024	DATE -	REVISED -	

STATE OF ILLINOIS
DEPARTMENT OF TRANSPORTATION

MAINTENANCE OF TRAFFIC
TYPICAL SECTIONS

SCALE: NTS | SHEET 2 OF 10 SHEETS | STA. | TO STA.

F.A.I RTE.	SECTION	COUNTY	TOTAL SHEETS	SHEET NO.
64	82-(4,5,6,7)-1RS-2	ST CLAIR	388	123
		CONTRACT NO. 76R99		
	ILLINOIS	FED. AID PROJECT		

####

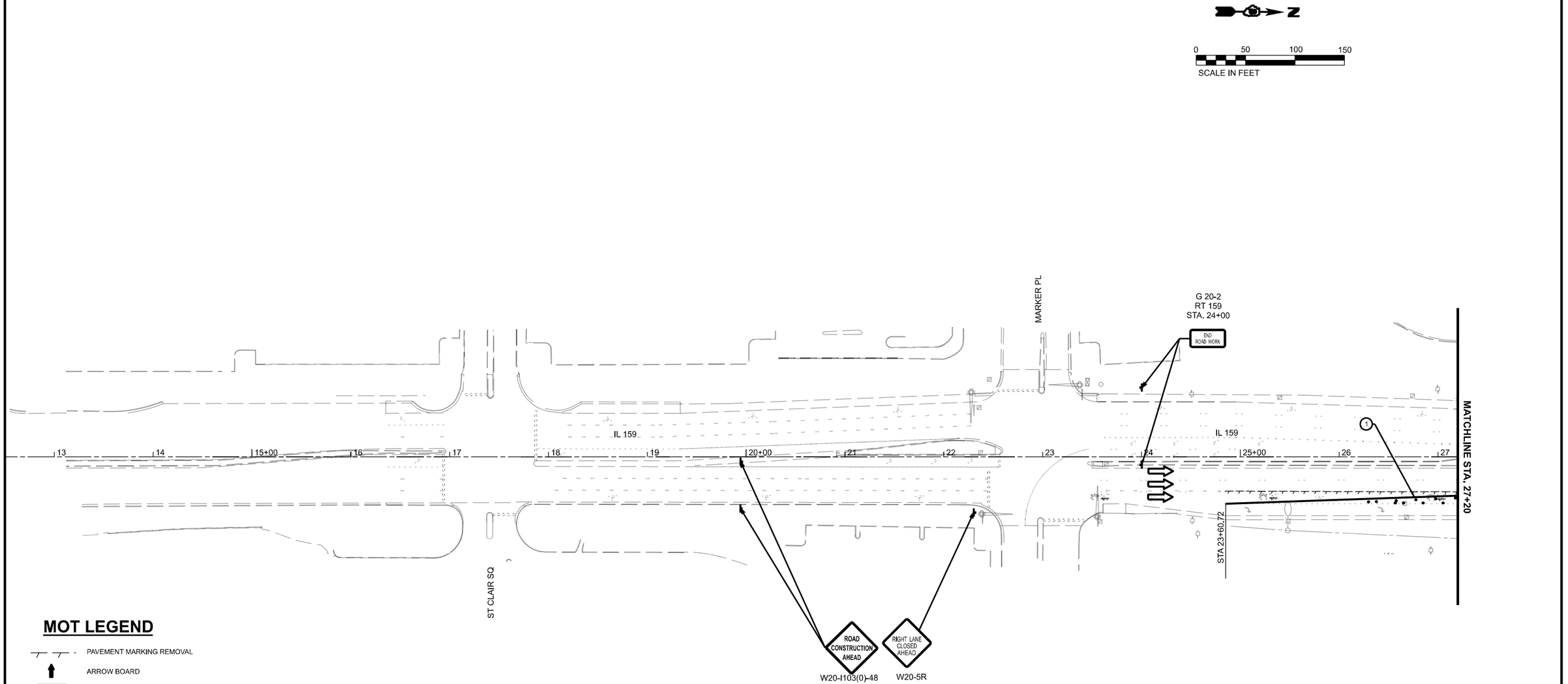

MOT LEGEND

- PAVEMENT MARKING REMOVAL
- ARROW BOARD
- WORK AREA
- DRUM WITH STEADY BURNING LIGHT
- PROPOSED TEMPORARY SIGN
- TEMPORARY CONCRETE BARRIER
- ATTENUATOR
- TYPE III BARRICADE
- TRAFFIC FLOW
- (1) TEMPORARY PAVEMENT MARKING - LINE 4" - TYPE IV TAPE (SOLID WHITE)
- (2) TEMPORARY PAVEMENT MARKING - LINE 4" - TYPE IV TAPE (SOLID YELLOW)
- (3) TEMPORARY PAVEMENT MARKING - LINE 4" - TYPE IV TAPE (SKIP DASH)
- (4) TEMPORARY PAVEMENT MARKING - LINE 4" - TYPE IV TAPE (DOTTED WHITE LINE)
- (5) TEMPORARY PAVEMENT MARKING - LETTERS & SYMBOLS
- (6) TEMPORARY PAVEMENT MARKING - LINE 12" - TYPE IV TAPE (STOP BAR WHITE)

MODEL: IL159 - MOT 1
FILE NAME: J:\2023\6041WO 6\CADD Data\Sheets\IL159 - MOT 1_S1.dgn

ABNA
DESIGN FIRM REG. 184.002117
745 McClintock Drive
Suite 210
Burr Ridge, IL 60527
Ph: 773-481-4788
Fax: 773-239-3728

USER NAME = aasyed	DESIGNED - CT	REVISED -	
	DRAWN - MC, AS	REVISED -	
PLOT SCALE = 0.16666633 ' / in.	CHECKED - TPP	REVISED -	
PLOT DATE = 9/17/2024	DATE -	REVISED -	

STATE OF ILLINOIS
DEPARTMENT OF TRANSPORTATION

MAINTENANCE OF TRAFFIC
STAGE 1

SCALE: 1"=50' | SHEET 3 OF ##### SHEETS | STA. 13+00 | TO STA. 27+20.00

F.A.I RTE.	SECTION	COUNTY	TOTAL SHEETS	SHEET NO.
I-64	82-(4,5,6,7)-1RS-2	ST. CLAIR	388	124
		CONTRACT NO. 76R99		
	ILLINOIS	FED. AID PROJECT		

NOTES:

1. EXIT SIGN - SPECIAL TO BE INSTALLED PER STD 701411.

LEFT LANE CLOSED AHEAD
W9-3L
200' FROM STA. 14+25.97

START 100' LEFT LANE CLOSURE TAPER AT STA. 14+ 25.97

END ROAD WORK
G 20-2
ENTRANCE RAMP
STA. 7+30

ROAD CONSTRUCTION AHEAD
W20-I103(0)-48

ON RAMP
W13-4P-3636

I-64 EB STA. 511+00

ROAD CONSTRUCTION AHEAD
W20-1

STA 17+17.65

RAMP LEFT TURN LANES TO BE CLOSED, TYP.

12.00'

12.00'

MATCHLINE STA. 27+20

MATCHLINE STA. 41+00

IL 159

STA 31+12.24

STA 33+66.90

STA 36+67.39

STA 39+12.50

12:1 TAPER

12:1 TAPER

RIGHT LANE CLOSED AHEAD
W20-5R

EXIT OPEN
E5-3

W21-1

RIGHT LANE CLOSED AHEAD
W20-5R

W21-1

EXIT
SEE NOTE 1

ROAD CONSTRUCTION AHEAD
W20-I103(0)-48

ON RAMP
W13-4P-3636

I-64 WB STA. 567+00

W9-3L
LEFT LANE CLOSED AHEAD

END ROAD WORK
G 20-2
ENTRANCE RAMP
STA. 5+00

END ROAD WORK
G 20-2
ENTRANCE RAMP
STA. 7+55

STA 14+09.94

START 100' LEFT LANE CLOSURE TAPER AT STA. 15+14.85

I-64

36" RCCP

RIPRAP

24" CMP

12" CMP

0 50 100 150
SCALE IN FEET

MOT LEGEND

- PAVEMENT MARKING REMOVAL
- ARROW BOARD
- WORK AREA
- DRUM WITH STEADY BURNING LIGHT
- PROPOSED TEMPORARY SIGN
- TEMPORARY CONCRETE BARRIER
- ATTENUATOR
- TYPE III BARRICADE
- TRAFFIC FLOW
- (1) TEMPORARY PAVEMENT MARKING - LINE 4" - TYPE IV TAPE (SOLID WHITE)
- (2) TEMPORARY PAVEMENT MARKING - LINE 4" - TYPE IV TAPE (SOLID YELLOW)
- (3) TEMPORARY PAVEMENT MARKING - LINE 4" - TYPE IV TAPE (SKIP DASH)
- (4) TEMPORARY PAVEMENT MARKING - LINE 4" - TYPE IV TAPE (DOTTED WHITE LINE)
- (5) TEMPORARY PAVEMENT MARKING - LETTERS & SYMBOLS
- (6) TEMPORARY PAVEMENT MARKING - LINE 12" - TYPE IV TAPE (STOP BAR WHITE)

MODEL: IL159 - MOT 2
FILE NAME: J:\2023\6044\WO 6\CADD Data\Sheets\IL159 - MOT 2_S1.dgn

ABNA DESIGN FIRM REG. 184.002117
745 McClintock Drive
Suite 210
Burr Ridge, IL 60527
Ph. 773-681-4780
Fax. 773-239-3728

USER NAME = aasyed	DESIGNED - CT	REVISED -	
	DRAWN - MC, AS	REVISED -	
PLOT SCALE = 0.16666633 ' / in.	CHECKED - TPP	REVISED -	
PLOT DATE = 9/17/2024	DATE -	REVISED -	

STATE OF ILLINOIS
DEPARTMENT OF TRANSPORTATION

MAINTENANCE OF TRAFFIC
STAGE 1

SCALE: 1"=50' | SHEET 4 OF ~~##~~ SHEETS | STA. 27+20.00 | TO STA. 41+00.00

F.A.I. RTE.	SECTION	COUNTY	TOTAL SHEETS	SHEET NO.
I-64	82-(4,5,6,7)-1RS-2	ST. CLAIR	388	125
		CONTRACT NO. 76R99		
	ILLINOIS	FED. AID PROJECT		

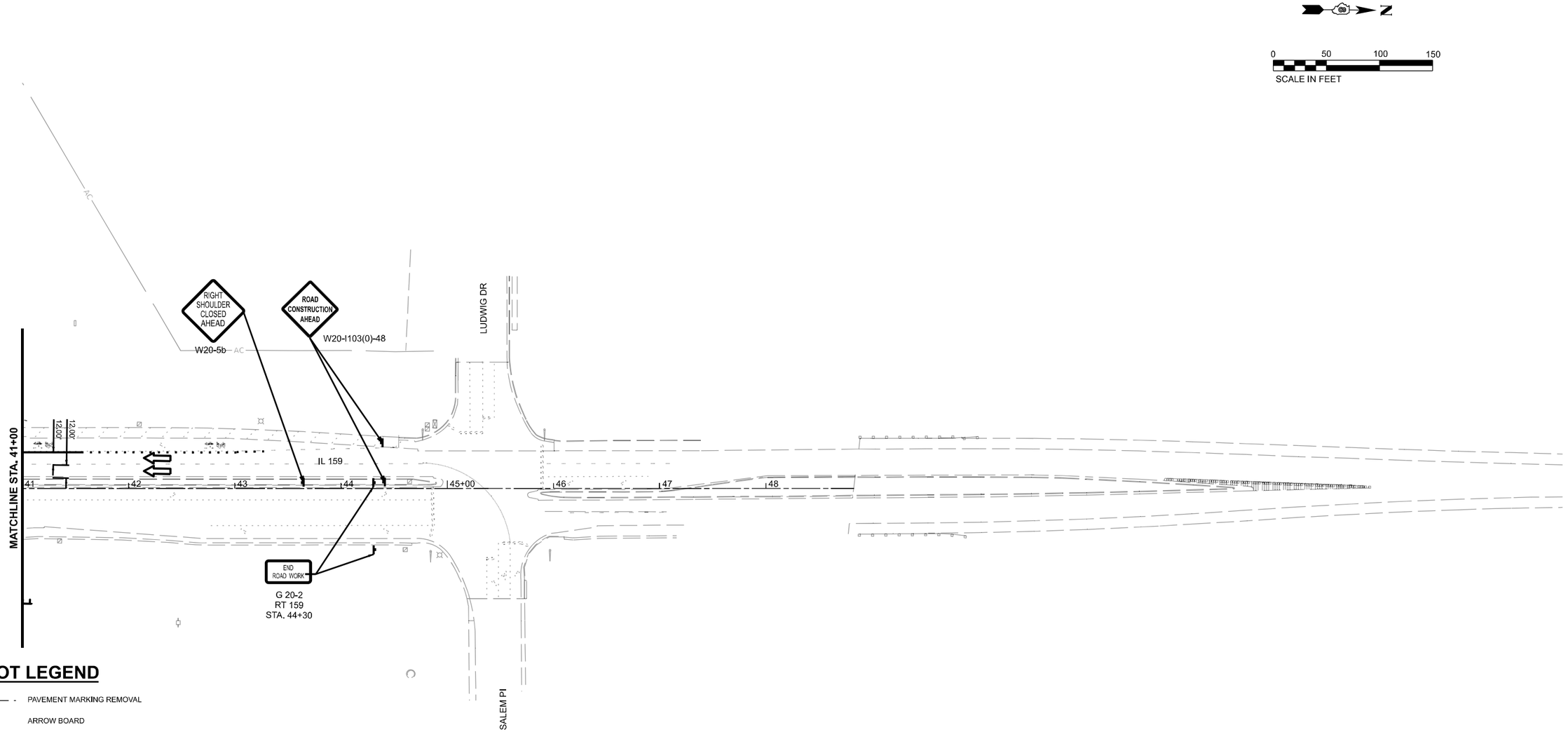

MOT LEGEND

- PAVEMENT MARKING REMOVAL
- ARROW BOARD
- WORK AREA
- DRUM WITH STEADY BURNING LIGHT
- PROPOSED TEMPORARY SIGN
- TEMPORARY CONCRETE BARRIER
- ATTENUATOR
- TYPE III BARRICADE
- TRAFFIC FLOW
- (1) TEMPORARY PAVEMENT MARKING - LINE 4" - TYPE IV TAPE (SOLID WHITE)
- (2) TEMPORARY PAVEMENT MARKING - LINE 4" - TYPE IV TAPE (SOLID YELLOW)
- (3) TEMPORARY PAVEMENT MARKING - LINE 4" - TYPE IV TAPE (SKIP DASH)
- (4) TEMPORARY PAVEMENT MARKING - LINE 4" - TYPE IV TAPE (DOTTED WHITE LINE)
- (5) TEMPORARY PAVEMENT MARKING - LETTERS & SYMBOLS
- (6) TEMPORARY PAVEMENT MARKING - LINE 12" - TYPE IV TAPE (STOP BAR WHITE)

MODEL: IL159 - MOT 3
FILE NAME: J:\2023\60944\WO 6\CADD Data\Sheets\IL-159 - MOT 3_S1.dgn

ABNA DESIGN FIRM REG. 184.002117
745 McClintock Drive
Suite 210
Burr Ridge, IL 60527
Ph. 773-981-4788
Fax: 773-239-3728

USER NAME = tpaolicchi	DESIGNED - CT	REVISED -
	DRAWN - MC, AS	REVISED -
PLOT SCALE = 0.16666633 ' / In.	CHECKED - TPP	REVISED -
PLOT DATE = 9/18/2024	DATE -	REVISED -

STATE OF ILLINOIS
DEPARTMENT OF TRANSPORTATION

MAINTENANCE OF TRAFFIC
STAGE 1

SCALE: 1"=50' | SHEET 5 OF 10 SHEETS | STA. 41+00.00 | TO STA.

F.A.I. RTE.	SECTION	COUNTY	TOTAL SHEETS	SHEET NO.
I-64	82-(4,5,6,7)-1RS-2	ST. CLAIR	388	126
		CONTRACT NO. 76R99		
	ILLINOIS	FED. AID PROJECT		

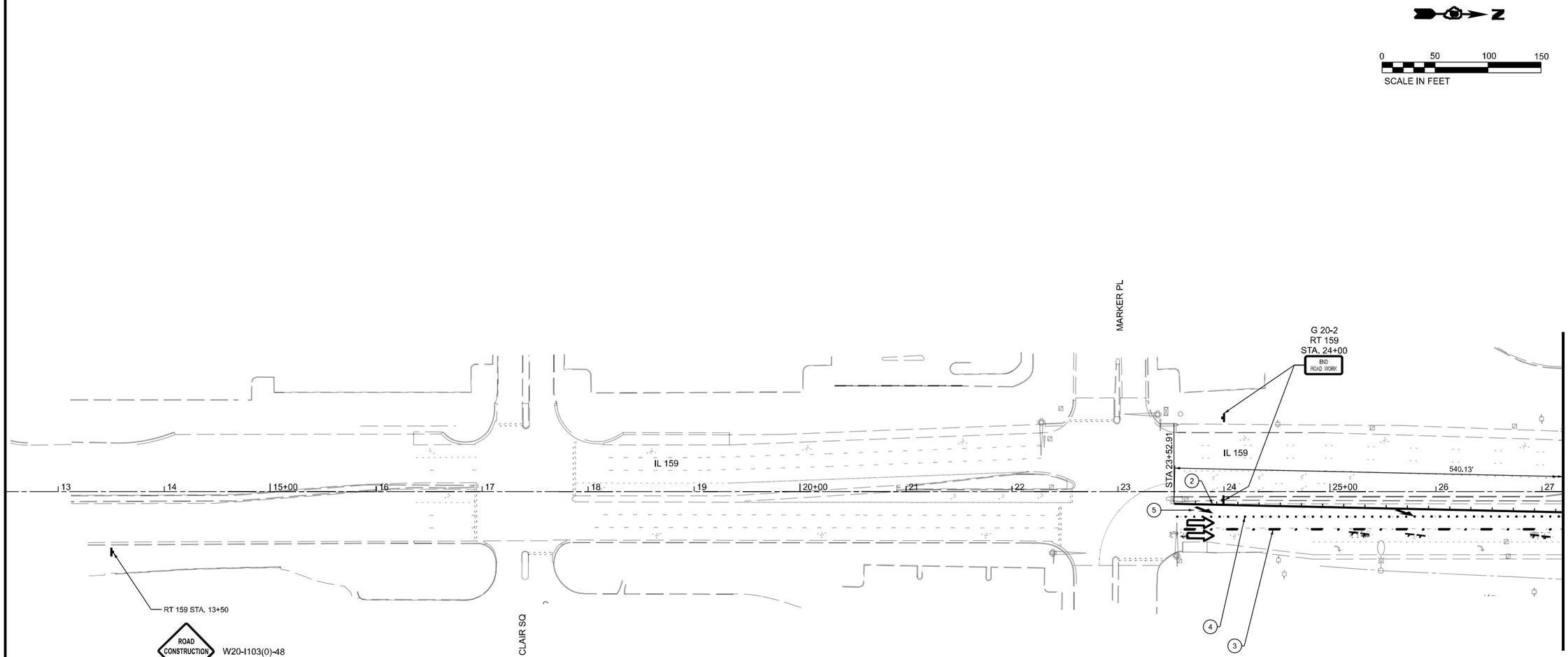

MOT LEGEND

- PAVEMENT MARKING REMOVAL
- ARROW BOARD
- WORK AREA
- DRUM WITH STEADY BURNING LIGHT
- PROPOSED TEMPORARY SIGN
- TEMPORARY CONCRETE BARRIER
- ATTENUATOR
- TYPE III BARRICADE
- TRAFFIC FLOW
- (1) TEMPORARY PAVEMENT MARKING - LINE 4" - TYPE IV TAPE (SOLID WHITE)
- (2) TEMPORARY PAVEMENT MARKING - LINE 4" - TYPE IV TAPE (SOLID YELLOW)
- (3) TEMPORARY PAVEMENT MARKING - LINE 4" - TYPE IV TAPE (SKIP DASH)
- (4) TEMPORARY PAVEMENT MARKING - LINE 4" - TYPE IV TAPE (DOTTED WHITE LINE)
- (5) TEMPORARY PAVEMENT MARKING - LETTERS & SYMBOLS
- (6) TEMPORARY PAVEMENT MARKING - LINE 12" - TYPE IV TAPE (STOP BAR WHITE)

MODEL: IL159 - MOT 1
FILE NAME: J:\2023\6044\WO 6\CADD Data\Sheets\IL159 - MOT 1 S2.dgn

ABNA DESIGN FIRM REG. 184.002117
745 McClintock Drive
Suite 210
Burr Ridge, IL 60527
Ph. 773-881-4788
Fax: 773-239-3728

USER NAME = aasyed	DESIGNED - CT	REVISED -	
	DRAWN - MC,AS	REVISED -	
PLOT SCALE = 0.16666633 ' / in.	CHECKED - TPP	REVISED -	
PLOT DATE = 9/17/2024	DATE -	REVISED -	

STATE OF ILLINOIS
DEPARTMENT OF TRANSPORTATION

MAINTENANCE OF TRAFFIC
STAGE 2

SCALE: 1"=50' | SHEET 6 OF ##### SHEETS | STA. 13+00 | TO STA. 27+20.00

F.A.I RTE.	SECTION	COUNTY	TOTAL SHEETS	SHEET NO.
I-64	82-(4,5,6,7)-1RS-2	ST. CLAIR	388	127
		CONTRACT NO. 76R99		
	ILLINOIS FED. AID PROJECT			

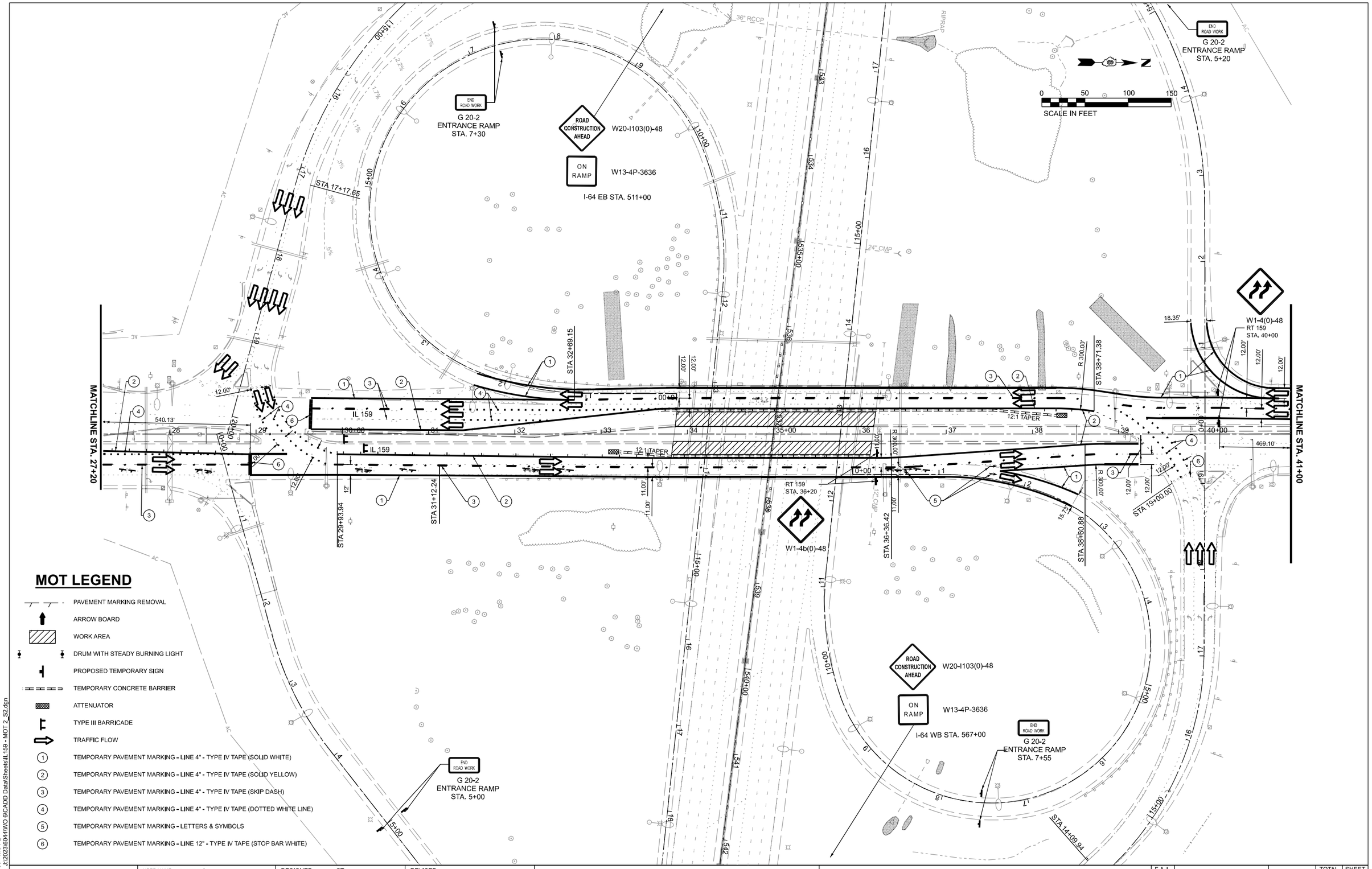

MOT LEGEND

- PAVEMENT MARKING REMOVAL
- ARROW BOARD
- WORK AREA
- DRUM WITH STEADY BURNING LIGHT
- PROPOSED TEMPORARY SIGN
- TEMPORARY CONCRETE BARRIER
- ATTENUATOR
- TYPE III BARRICADE
- TRAFFIC FLOW
- (1) TEMPORARY PAVEMENT MARKING - LINE 4" - TYPE IV TAPE (SOLID WHITE)
- (2) TEMPORARY PAVEMENT MARKING - LINE 4" - TYPE IV TAPE (SOLID YELLOW)
- (3) TEMPORARY PAVEMENT MARKING - LINE 4" - TYPE IV TAPE (SKIP DASH)
- (4) TEMPORARY PAVEMENT MARKING - LINE 4" - TYPE IV TAPE (DOTTED WHITE LINE)
- (5) TEMPORARY PAVEMENT MARKING - LETTERS & SYMBOLS
- (6) TEMPORARY PAVEMENT MARKING - LINE 12" - TYPE IV TAPE (STOP BAR WHITE)

MODEL: IL159 - MOT 2
FILE NAME: J:\2023\6044\WO 6\CADD Data\Sheets\IL159 - MOT 2_S2.dgn

ABNA
DESIGN FIRM REG. 184.002117
745 McClintock Drive
Suite 210
Burr Ridge, IL 60527
Ph. 773-681-4788
Fax: 773-239-3728

USER NAME = aasyed	DESIGNED - CT	REVISED -	
	DRAWN - MC, AS	REVISED -	
PLOT SCALE = 0.16666633 ' / In.	CHECKED - TPP	REVISED -	
PLOT DATE = 9/17/2024	DATE -	REVISED -	

STATE OF ILLINOIS
DEPARTMENT OF TRANSPORTATION

MAINTENANCE OF TRAFFIC
STAGE 2

SCALE: 1"=50' | SHEET 7 OF 10 SHEETS | STA. 27+20.00 TO STA. 41+00.00

F.A.I. RTE.	SECTION	COUNTY	TOTAL SHEETS	SHEET NO.
I-64	82-(4,5,6,7)-1RS-2	ST. CLAIR	388	128
		CONTRACT NO. 76R99		
	ILLINOIS FED. AID PROJECT			

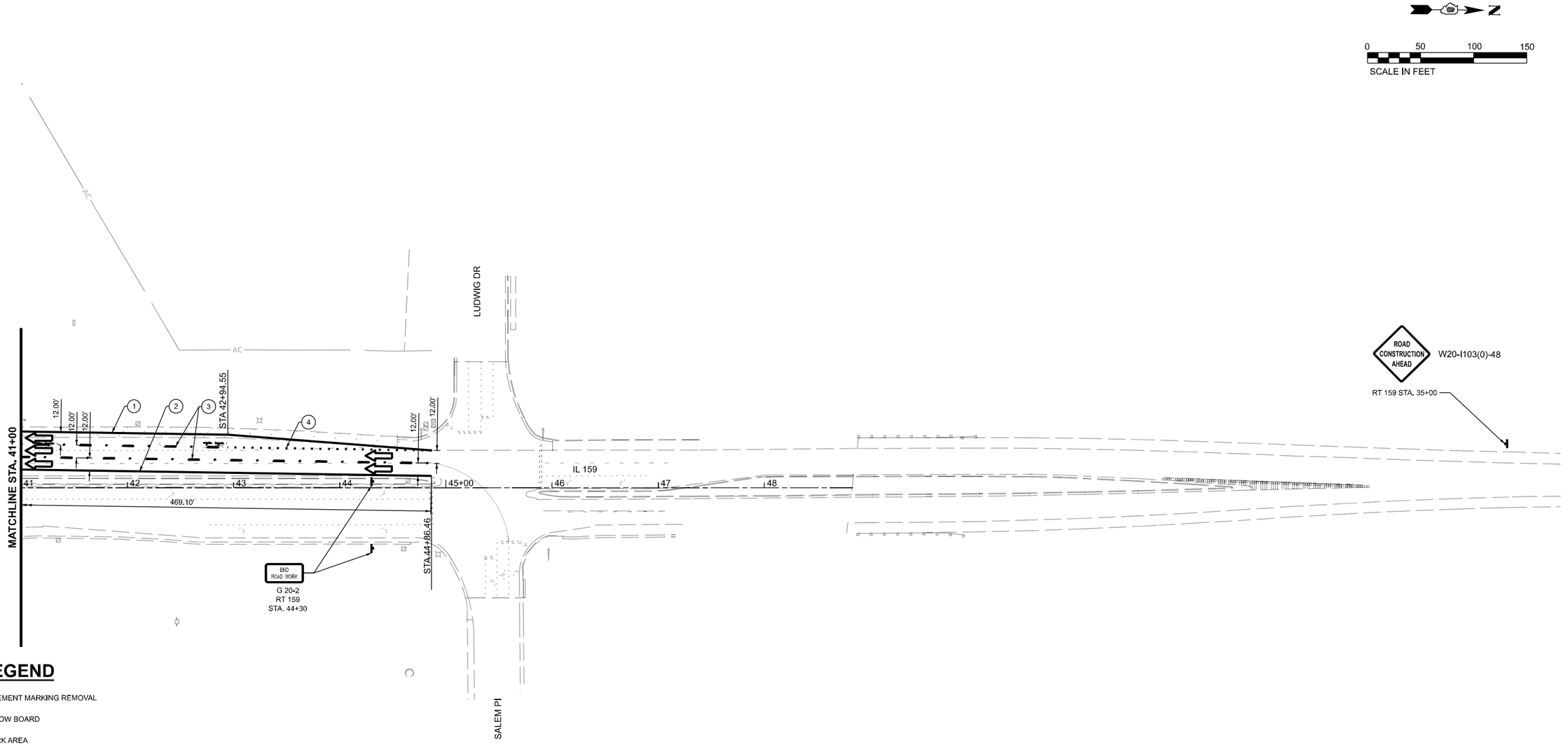

MOT LEGEND

- PAVEMENT MARKING REMOVAL
- ARROW BOARD
- WORK AREA
- DRUM WITH STEADY BURNING LIGHT
- PROPOSED TEMPORARY SIGN
- TEMPORARY CONCRETE BARRIER
- ATTENUATOR
- TYPE III BARRICADE
- TRAFFIC FLOW
- (1) TEMPORARY PAVEMENT MARKING - LINE 4" - TYPE IV TAPE (SOLID WHITE)
- (2) TEMPORARY PAVEMENT MARKING - LINE 4" - TYPE IV TAPE (SOLID YELLOW)
- (3) TEMPORARY PAVEMENT MARKING - LINE 4" - TYPE IV TAPE (SKIP DASH)
- (4) TEMPORARY PAVEMENT MARKING - LINE 4" - TYPE IV TAPE (DOTTED WHITE LINE)
- (5) TEMPORARY PAVEMENT MARKING - LETTERS & SYMBOLS
- (6) TEMPORARY PAVEMENT MARKING - LINE 12" - TYPE IV TAPE (STOP BAR WHITE)

MODEL: IL159 - MOT 3
FILE NAME: J:\2023\60944\WO 6\CADD Data\Sheets\IL159 - MOT 3_S2.dgn

ABNA
DESIGN FIRM REG. 184.002117
745 McClintock Drive
Suite 210
Burr Ridge, IL 60527
Ph. 773-881-4788
Fax: 773-239-3728

USER NAME = aasyed	DESIGNED - CT	REVISED -	
	DRAWN - MC, AS	REVISED -	
PLOT SCALE = 0.16666633 ' / In.	CHECKED - TPP	REVISED -	
PLOT DATE = 4/22/2024	DATE -	REVISED -	

STATE OF ILLINOIS
DEPARTMENT OF TRANSPORTATION

MAINTENANCE OF TRAFFIC
STAGE 2

SCALE: 1"=50' | SHEET 8 OF 10 SHEETS | STA. 41+00.00 | TO STA.

F.A.I. RTE.	SECTION	COUNTY	TOTAL SHEETS	SHEET NO.
I-64	82-(4,5,6,7)-1RS-2	ST. CLAIR	388	129
		CONTRACT NO. 76R99		
	ILLINOIS	FED. AID PROJECT		

SIGN LEGEND

(6) 	M1-5.3	
(8) 	M4-8A(0) 2418	
(11) 	M4-8(0) 2412	
(12) 	M5-1L(0) 2115	
(13) 	M5-1R(0) 2115	
(14) 	M6-3(0) 2115	
(15) 	M6-1L(0) 2115	
(16) 	M6-1R(0) 2115	
(19) 	M3-3 2412	
(20) 	M3-3 2412	

NOTES:

1. SIGNS FOR THE DETOUR ARE INCLUDED IN THE CONTRACT LUMP SUM COST OF TRAFFIC CONTROL AND PROTECTION (SPECIAL).
2. ALL TRAFFIC SIGNS SHALL MEET WITH THE APPROVAL OF THE MANUAL ON UNIFORM TRAFFIC CONTROL DEVICES AND SHALL MEET WITH THE APPROVAL OF THE ENGINEER REGARDING LOCATION, TYPE, SIZE, NUMBER, AND DURATION.
3. FOR TYPICAL SIGN INSTALLATION - SEE HIGHWAY STANDARD 701901.
4. APPROPRIATE IDOT TRAFFIC CONTROL STANDARDS SHALL BE USED TO INSTALL AND REMOVE TRAFFIC CONTROL AND PROTECTION DEVICES.

MODEL: detour-1 [Sheet]
FILE NAME: J:\2023\6044\WO 6\CADD Data\Sheets\D876R99-detour.dgn

ABNA DESIGN FIRM REG. 184.002117
745 McClintock Drive
Suite 210
Burr Ridge, IL 60527
Ph. 773-881-4788
Fax: 773-239-3728

USER NAME = galsailani	DESIGNED - CT	REVISED -	
	DRAWN - GA	REVISED -	
PLOT SCALE = 0.16666633 ' / in.	CHECKED - TPP	REVISED -	
PLOT DATE = 9/17/2024	DATE - 9/17/2024	REVISED -	

STATE OF ILLINOIS
DEPARTMENT OF TRANSPORTATION

IL ROUTE 159
DETOUR SIGNS

SCALE: NONE | SHEET 1 OF 2 SHEETS | STA. | TO STA.

F.A.I RTE.	SECTION	COUNTY	TOTAL SHEETS	SHEET NO.
64	82-(4,5,6,7)-1RS-2	ST CLAIR	388	130
		CONTRACT NO. 76R99		
	ILLINOIS FED. AID PROJECT			

####

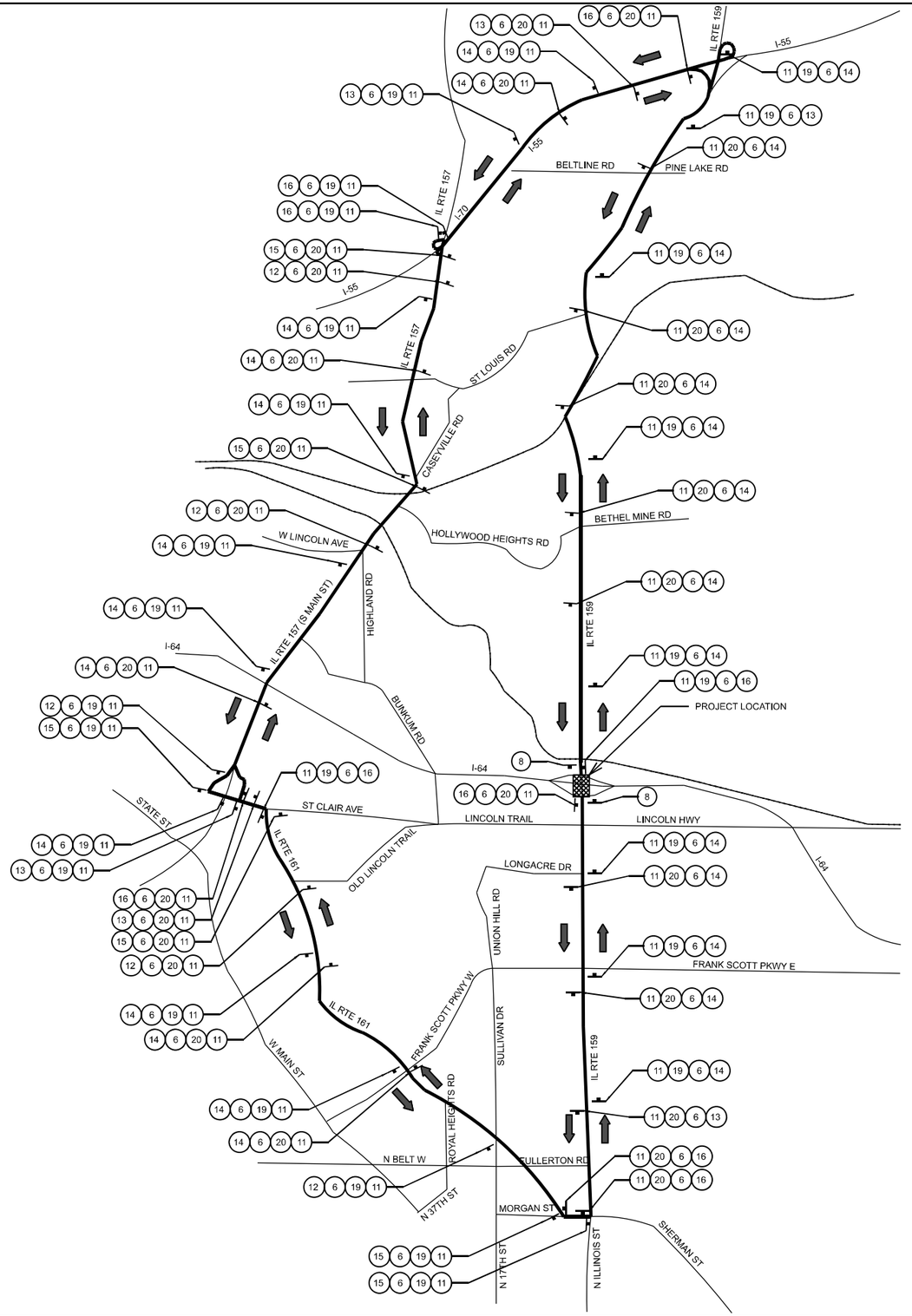

DETOUR PLAN LEGEND

- PROJECT AREA FOR DETOUR
- SIGN POST MOUNTED
- DETOUR SIGN TYPE (19 2 3)
- DETOUR ROUTE
- DIRECTION OF TRAFFIC

MODEL: detour-2 [Sheet]
FILE NAME: J:\2023\60441\WO 6\CADD Data\Sheets\D676R99-detour.dgn

ABNA
DESIGN FIRM REG. 184.002117
745 McClintock Drive
Suite 210
Burr Ridge, IL 60527
Ph. 773-851-4788
Fax: 773-239-3728

USER NAME = galsallani	DESIGNED - CT	REVISED -	
	DRAWN - GA	REVISED -	
PLOT SCALE = 0.16666633 ' / In.	CHECKED - TPP	REVISED -	
PLOT DATE = 9/17/2024	DATE - 9/17/2024	REVISED -	

STATE OF ILLINOIS
DEPARTMENT OF TRANSPORTATION

IL ROUTE 159
DETOUR PLAN

SCALE: NONE | SHEET 2 OF 2 SHEETS | STA. | TO STA.

F.A.I RTE.	SECTION	COUNTY	TOTAL SHEETS	SHEET NO.
64	82-(4,5,6,7)-1RS-2	ST CLAIR	388	131
		CONTRACT NO. 76R99		
	ILLINOIS FED. AID PROJECT			

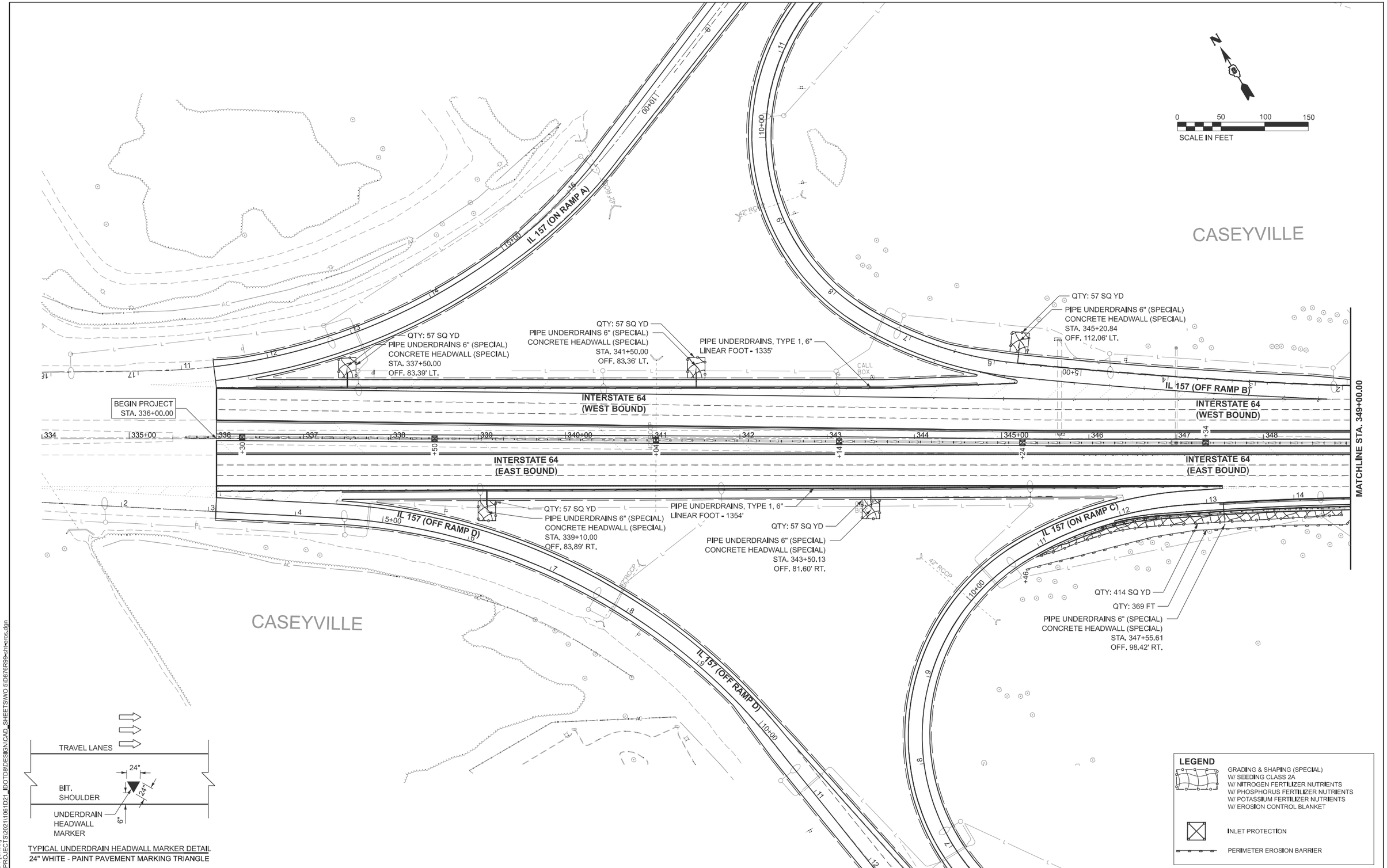

MODEL: I64_CL-1 [Sheet]
FILE NAME: S:\PROJECTS\2021\1061D21_IDOTD8\DESIGN\CAD_SHEETS\WO 5\D876R99-sht-eros.dgn

WILLETT HOFMANN & ASSOCIATES INC
ENGINEERING ARCHITECTURE LAND SURVEYING
809 EAST 2ND STREET, DIXON, IL 61021 0367
T: 815 284 3381 DESIGN FIRM #184-000918

USER NAME = greg	DESIGNED - GBG	REVISED -	
	DRAWN - KRH	REVISED -	
PLOT SCALE = $SCALE$	CHECKED - GBG	REVISED -	
PLOT DATE = 11/18/2024	DATE - 11-18-2024	REVISED -	

STATE OF ILLINOIS
DEPARTMENT OF TRANSPORTATION

DRAINAGE, GRADING, AND EROSION CONTROL PLAN
IL 157 AND I-64

SCALE: 1"=50' | SHEET 1 OF 25 SHEETS | STA. 334+00.00 TO STA. 349+00.00

F.A.I RTE.	SECTION	COUNTY	TOTAL SHEETS	SHEET NO.
64	82-(4,5,6,7)-1RS-2	ST. CLAIR	388	132
		CONTRACT NO. 76R99		
		ILLINOIS	FED. AID PROJECT	

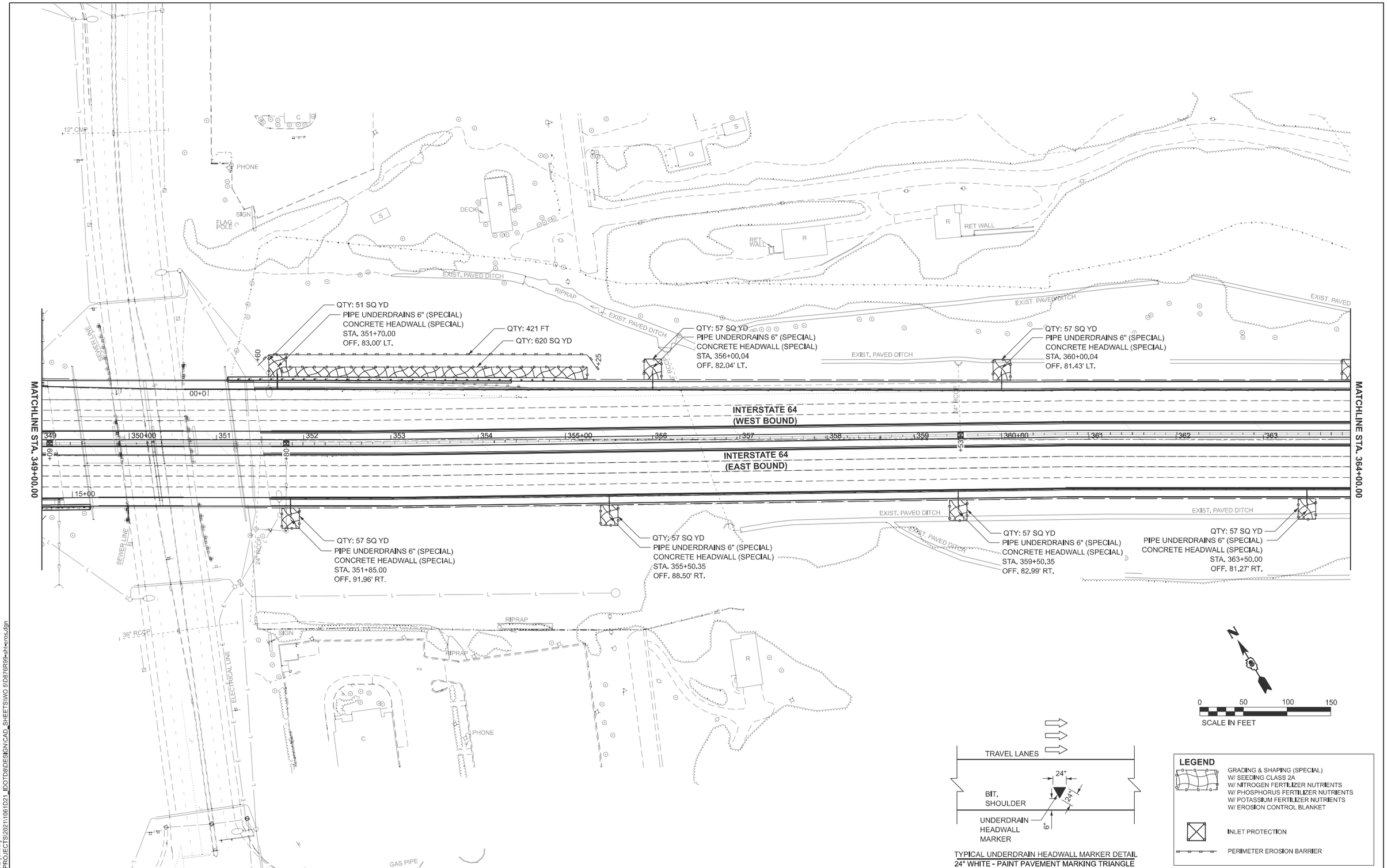

MODEL: I64_CL-2 [Sheet]
FILE NAME: S:\PROJECTS\2021\1061D21_IDOTD8\DESIGN\CAD_SHEETS\WO 5\D876R99-sht-eros.dgn

WILLETT HOFMANN & ASSOCIATES INC
ENGINEERING ARCHITECTURE LAND SURVEYING
809 EAST 2ND STREET, DIXON, IL 61021 0367
T 815 284 3381 FAX 815 284 3389

USER NAME = greg	DESIGNED - GBG	REVISED -	
	DRAWN - KRH	REVISED -	
PLOT SCALE = $SCALE$	CHECKED - GBG	REVISED -	
PLOT DATE = 11/18/2024	DATE - 11-30-2023	REVISED -	

STATE OF ILLINOIS
DEPARTMENT OF TRANSPORTATION

DRAINAGE, GRADING, AND EROSION CONTROL PLAN
I-64

SCALE: 1"=50' | SHEET 2 OF 25 SHEETS | STA. 349+00.00 TO STA. 364+00.00

F.A.I RTE.	SECTION	COUNTY	TOTAL SHEETS	SHEET NO.
64	82-(4,5,6,7)-1RS-2	ST. CLAIR	388	133
		CONTRACT NO. 76R99		
		ILLINOIS	FED. AID PROJECT	

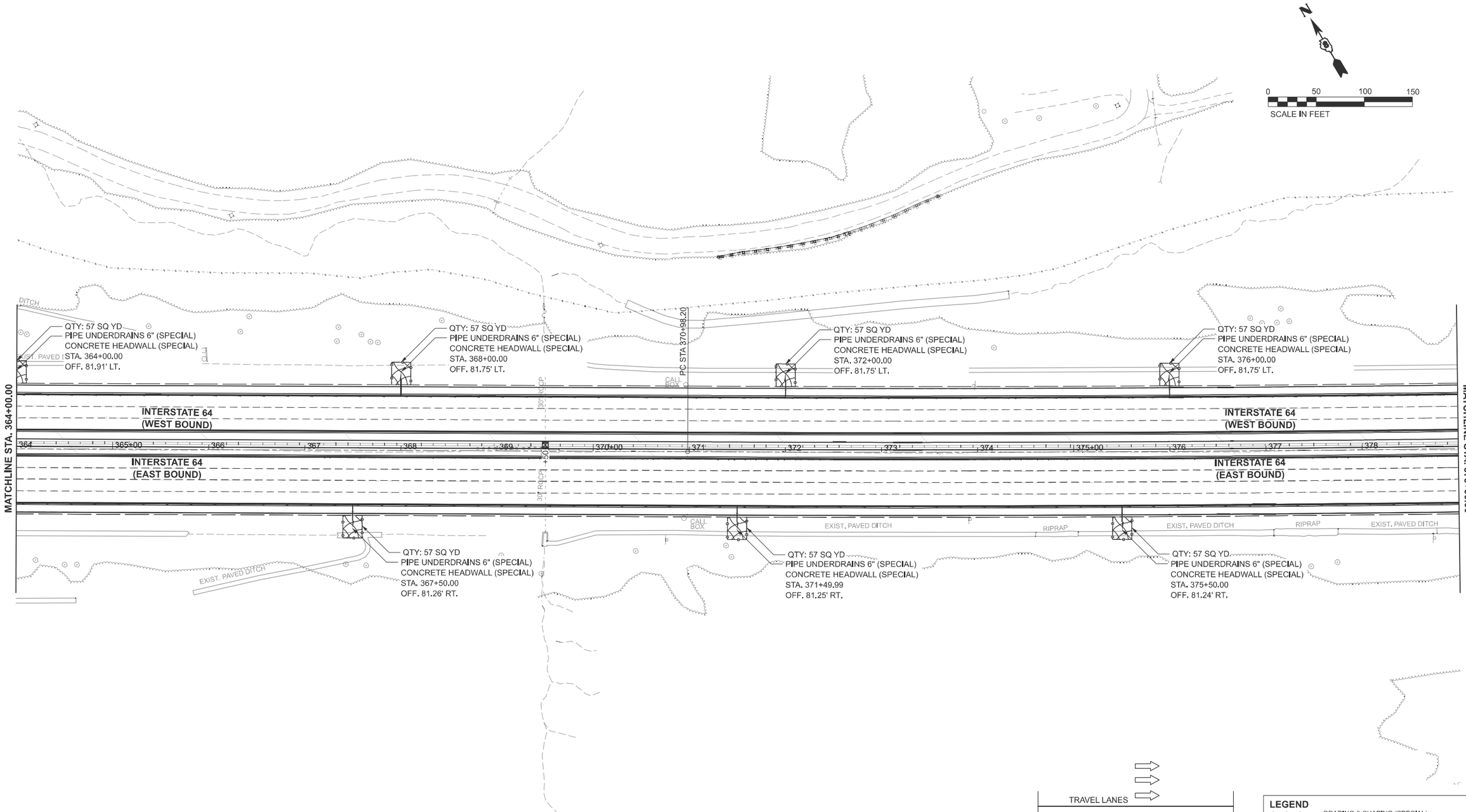

TYPICAL UNDERDRAIN HEADWALL MARKER DETAIL
24" WHITE - PAINT PAVEMENT MARKING TRIANGLE

MODEL: I64_CL-3 [Sheet]
FILE NAME: S:\PROJECTS\2021\1061D21_IDOTD8\DESIGN\CAD_SHEETS\WO 5\D876R99-sht-eros.dgn

WILLETT HOFMANN & ASSOCIATES INC
ENGINEERING ARCHITECTURE LAND SURVEYING
809 EAST 2ND STREET, DIXON, IL 61021-0367
T 815 284 3381 DESIGN FIRM #184-000918

USER NAME = greg	DESIGNED - GBG	REVISED -	
	DRAWN - KRH	REVISED -	
PLOT SCALE = $SCALE$	CHECKED - GBG	REVISED -	
PLOT DATE = 11/18/2024	DATE - 11-30-2023	REVISED -	

STATE OF ILLINOIS
DEPARTMENT OF TRANSPORTATION

DRAINAGE, GRADING, AND EROSION CONTROL PLAN
I-64

SCALE: 1"=50' | SHEET 3 OF 26 SHEETS | STA. 364+00.00 TO STA. 379+00.00

F.A.I RTE.	SECTION	COUNTY	TOTAL SHEETS	SHEET NO.
64	82-(4,5,6,7)-1RS-2	ST. CLAIR	388	134

CONTRACT NO. 76R99

ILLINOIS | FED. AID PROJECT

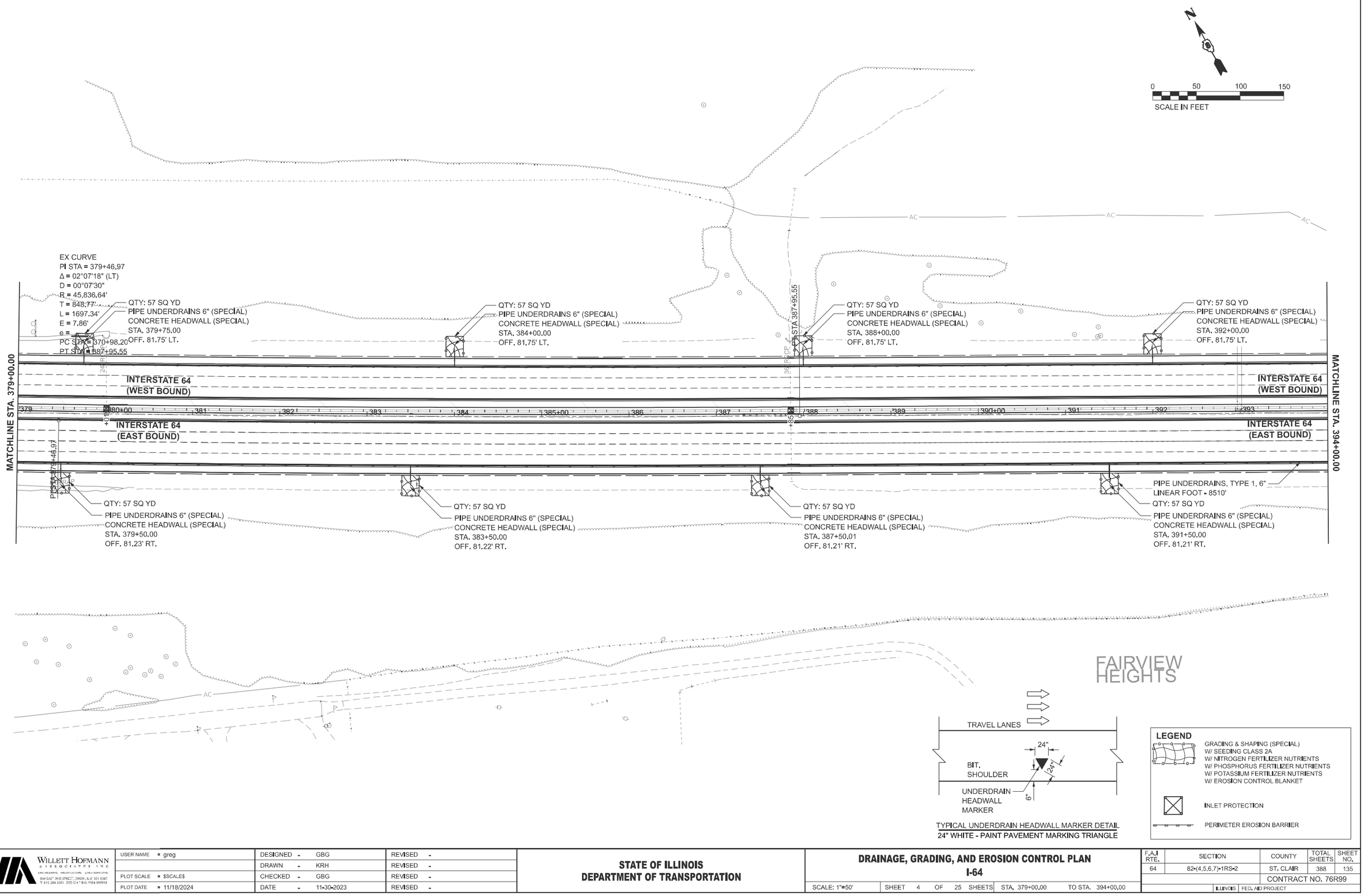

MODEL: I64_CL-4 [Sheet]
FILE NAME: S:\PROJECTS\2021\1061D2_IDOT\D8\DESIGN\CAD_SHEETS\WO 5\D876R99-sht-eros.dgn

WILLETT HOFMANN & ASSOCIATES INC
ENGINEERING ARCHITECTURE LAND SURVEYING
801 EAST 2ND STREET, DIXON, IL 61 321 0367
T 815 284 3581 FAX 815 284 3599

USER NAME = greg	DESIGNED - GBG	REVISED -
	DRAWN - KRH	REVISED -
PLOT SCALE = $SCALE$	CHECKED - GBG	REVISED -
PLOT DATE = 11/18/2024	DATE - 11-30-2023	REVISED -

STATE OF ILLINOIS
DEPARTMENT OF TRANSPORTATION

DRAINAGE, GRADING, AND EROSION CONTROL PLAN
I-64

SCALE: 1"=50' | SHEET 4 OF 25 SHEETS | STA. 379+00.00 | TO STA. 394+00.00

F.A.I RTE.	SECTION	COUNTY	TOTAL SHEETS	SHEET NO.
64	82-(4,5,6,7)-1RS-2	ST. CLAIR	388	135
		CONTRACT NO. 76R99		
	ILLINOIS FED. AID PROJECT			

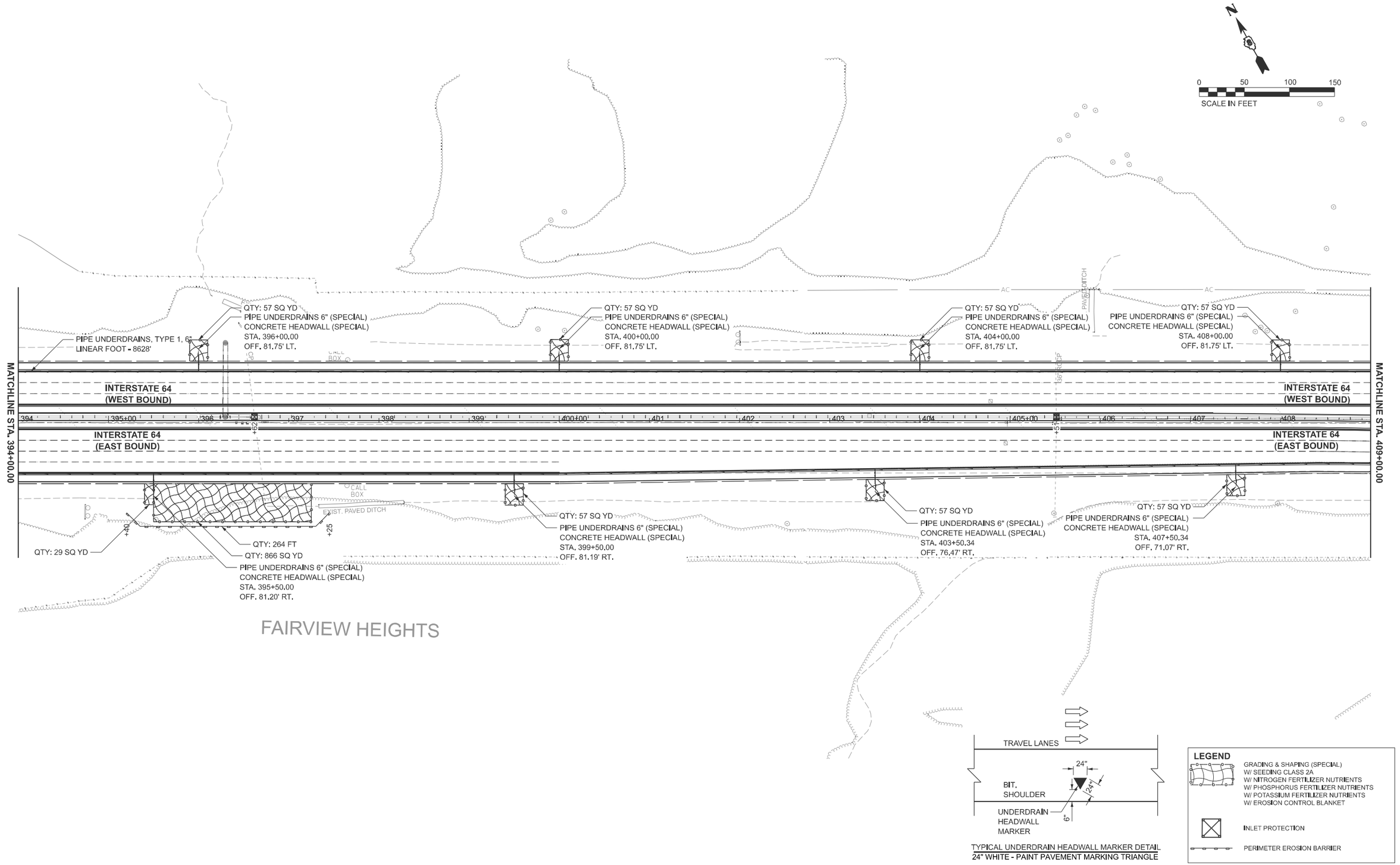

MODEL: I64_CL-5 [Sheet]
FILE NAME: S:\PROJECTS\2021\1061D2_IDOT\D8\DESIGN\CAD_SHEETS\WO 5\D876R99-sht-eros.dgn

WILLETT HOFMANN & ASSOCIATES INC
ENGINEERING ARCHITECTURE LAND SURVEYING
800 EAST 24TH STREET, 2ND FL, IL 61201
T 815.284.3581 FAX 815.284.3599

USER NAME	= greg	DESIGNED	- GBG	REVISED	-
		DRAWN	- KRH	REVISED	-
PLOT SCALE	= $SCALE$	CHECKED	- GBG	REVISED	-
PLOT DATE	= 11/18/2024	DATE	- 11-30-2023	REVISED	-

STATE OF ILLINOIS
DEPARTMENT OF TRANSPORTATION

DRAINAGE, GRADING, AND EROSION CONTROL PLAN
I-64

SCALE: 1"=50' | SHEET 5 OF 25 SHEETS | STA. 394+00.00 | TO STA. 409+00.00

F.A.I RTE.	SECTION	COUNTY	TOTAL SHEETS	SHEET NO.
64	82-(4,5,6,7)-1RS-2	ST. CLAIR	388	136
		CONTRACT NO. 76R99		
	ILLINOIS FED. AID PROJECT			

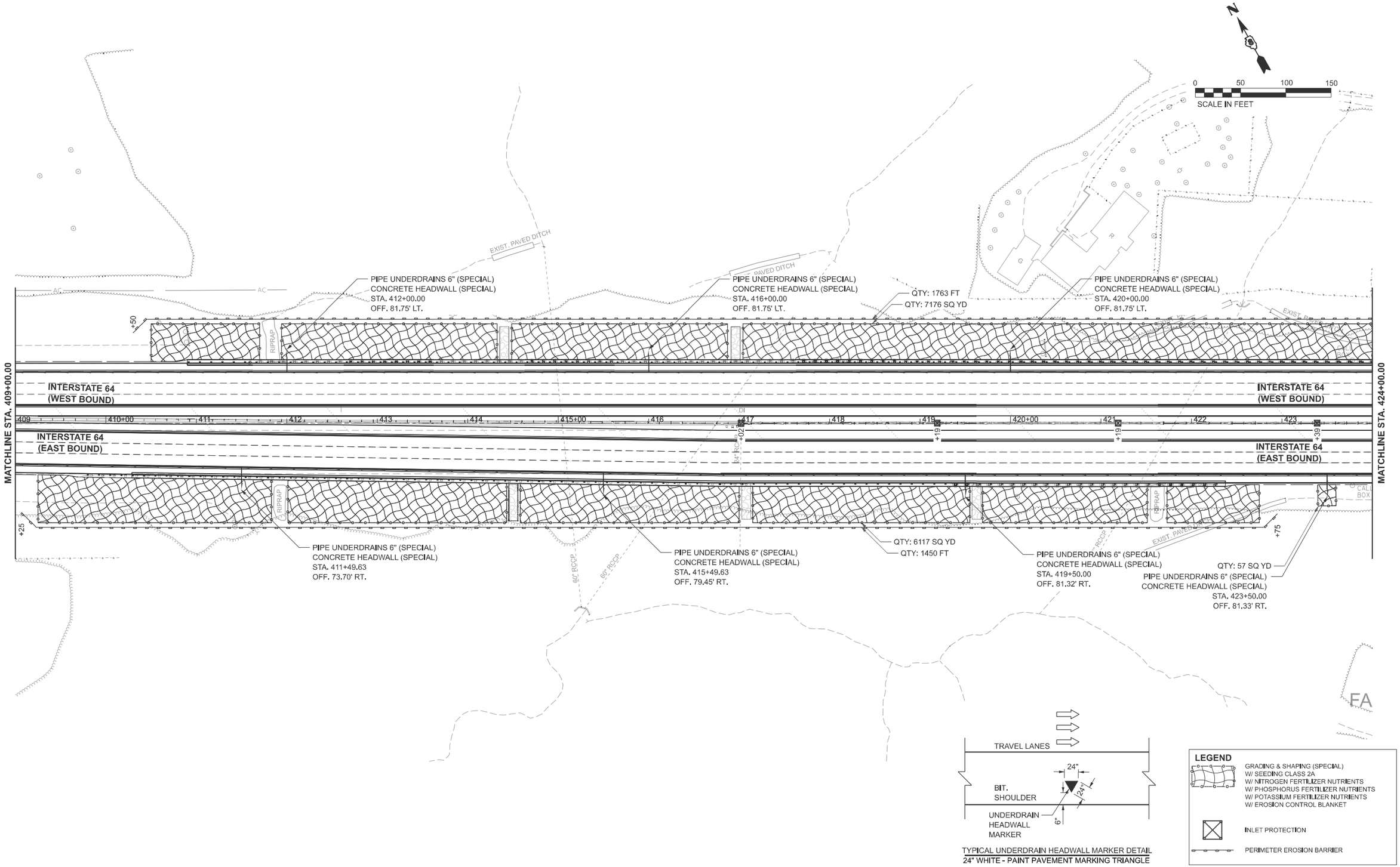

MODEL: I64_CL46 [Sheet]
FILE NAME: S:\PROJECTS\2021\1061D21_IDOT\D8\DESIGN\CAD_SHEETS\WO 5\D876R99-sht-eros.dgn

WILLETT HOFMANN & ASSOCIATES INC
ENGINEERING ARCHITECTURE LAND SURVEYING
909 EAST 29TH STREET, DANVILLE, IL 61 61832
T 815.284.3381 F 815.284.3387 FAX 1184 050918

USER NAME = greg	DESIGNED - GBG	REVISED -	STATE OF ILLINOIS DEPARTMENT OF TRANSPORTATION	DRAINAGE, GRADING, AND EROSION CONTROL PLAN I-64	
	DRAWN - KRH	REVISED -			
PLOT SCALE = $SCALE$	CHECKED - GBG	REVISED -			
PLOT DATE = 11/18/2024	DATE - 11-30-2023	REVISED -		SCALE: 1"=50' SHEET 6 OF 25 SHEETS STA. 409+00.00 TO STA. 424+00.00	

F.A.I RTE.	SECTION	COUNTY	TOTAL SHEETS	SHEET NO.
64	82-(4,5,6,7)-1RS-2	ST. CLAIR	388	137
		CONTRACT NO. 76R99		
	ILLINOIS FED. AID PROJECT			

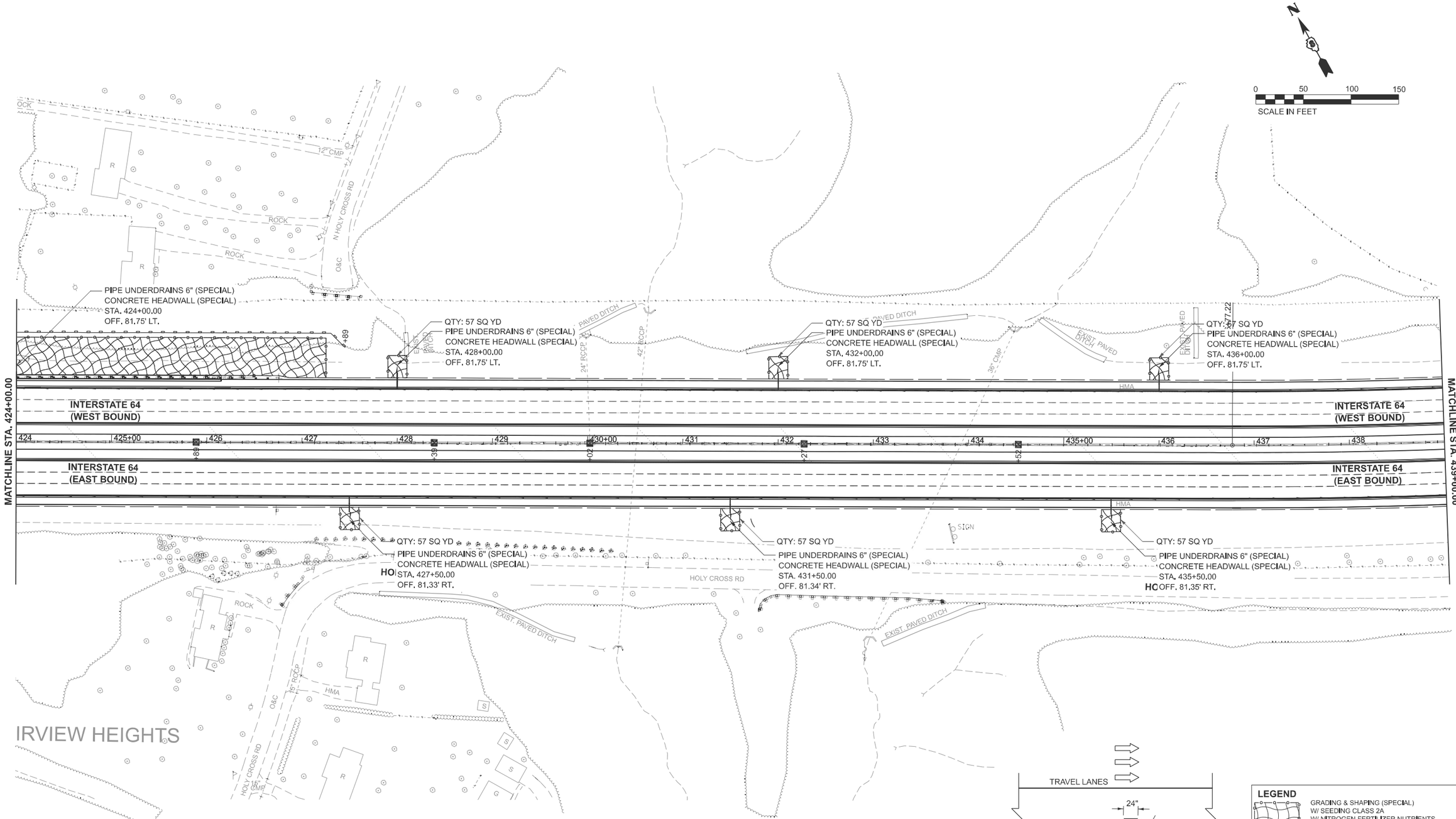

MODEL: I64_CL-7 [Sheet]
FILE NAME: S:\PROJECTS\2021\1061D21_IDOTD8\DESIGN\CAD_SHEETS\WO 5\D876R99-sht-eros.dgn

WILLETT HOFMANN & ASSOCIATES INC
ENGINEERING ARCHITECTURE LAND SURVEYING
809 EAST 2ND STREET, DIXON, IL 61021 0367
T 815 284 3381 DES GN F RM: #184 000918

USER NAME = greg	DESIGNED - GBG	REVISED -	
	DRAWN - KRH	REVISED -	
PLOT SCALE = $SCALE$	CHECKED - GBG	REVISED -	
PLOT DATE = 11/18/2024	DATE - 11-30-2023	REVISED -	

STATE OF ILLINOIS
DEPARTMENT OF TRANSPORTATION

DRAINAGE, GRADING, AND EROSION CONTROL PLAN
I-64

SCALE: 1"=50' | SHEET 7 OF 25 SHEETS | STA. 424+00.00 TO STA. 439+00.00

F.A.I RTE.	SECTION	COUNTY	TOTAL SHEETS	SHEET NO.
64	82-(4,5,6,7)-1RS-2	ST. CLAIR	388	138
		CONTRACT NO. 76R99		
		ILLINOIS	FED. AID PROJECT	

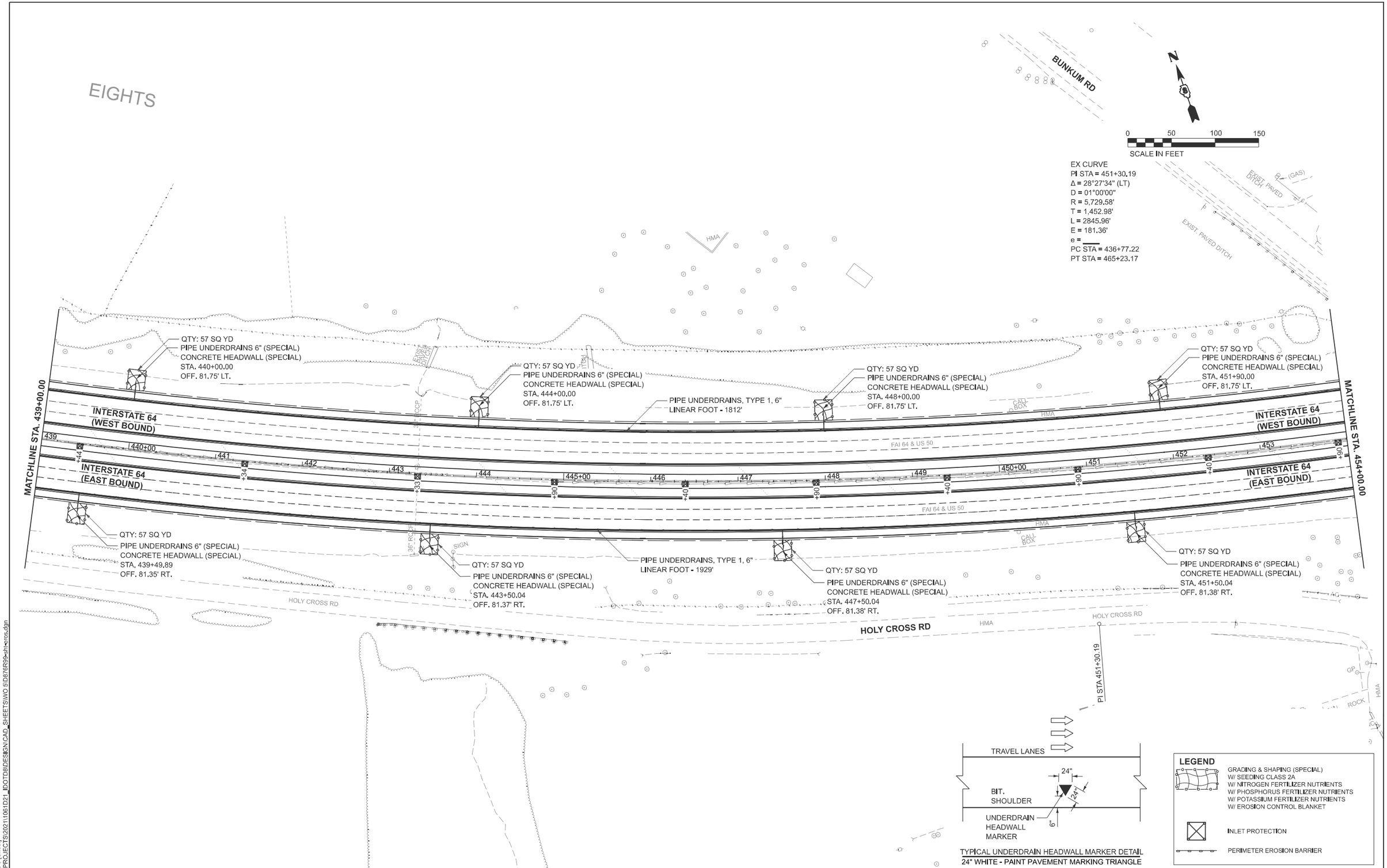

MODEL: I64_CL-8 [Sheet]
FILE NAME: S:\PROJECTS\2021\1061D21_IDOTD8\DESIGN\CAD_SHEETS\WO 5\D876R99-sht-eros.dgn

WILLETT HOFMANN & ASSOCIATES INC
ENGINEERING ARCHITECTURE LAND SURVEYING
809 EAST 2ND STREET, DIXON, IL 61021 0367
T 815 284 3381 DESIGN FIRM #184-000918

USER NAME = greg	DESIGNED - GBG	REVISED -	
	DRAWN - KRH	REVISED -	
PLOT SCALE = $SCALE$	CHECKED - GBG	REVISED -	
PLOT DATE = 11/18/2024	DATE - 11-30-2023	REVISED -	

STATE OF ILLINOIS
DEPARTMENT OF TRANSPORTATION

DRAINAGE, GRADING, AND EROSION CONTROL PLAN
I-64

SCALE: 1"=50' | SHEET 8 OF 25 SHEETS | STA. 439+00.00 TO STA. 454+00.00

F.A.I RTE.	SECTION	COUNTY	TOTAL SHEETS	SHEET NO.
64	82-(4,5,6,7)-1RS-2	ST. CLAIR	388	139
		CONTRACT NO. 76R99		
		ILLINOIS	FED. AID PROJECT	

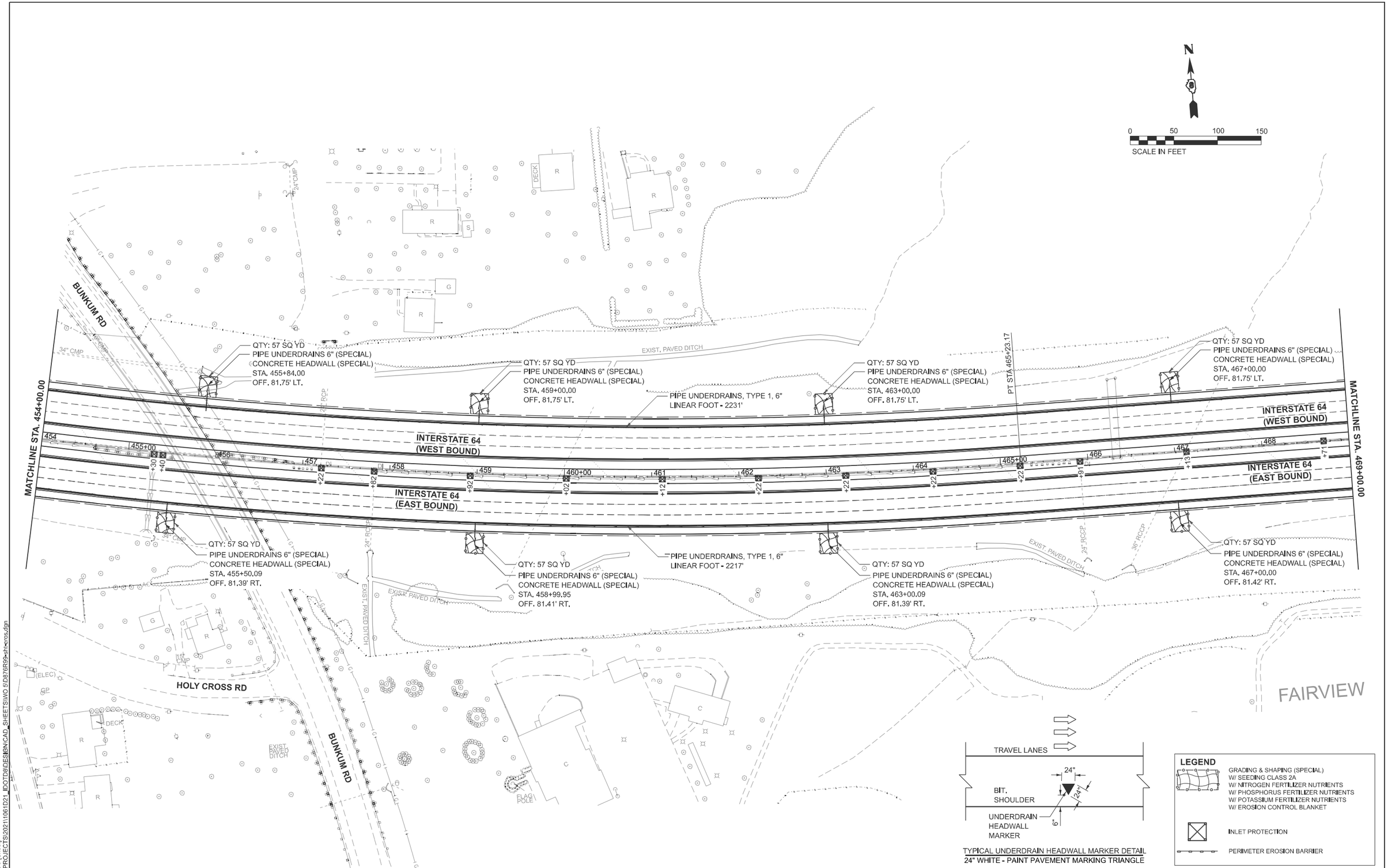

MODEL: I64_CL-9 [Sheet]
FILE NAME: S:\PROJECTS\2021\1061D21_IDOTD8\DESIGN\CAD_SHEETS\WO 5\D876R99-sht-eros.dgn

WILLETT HOFMANN & ASSOCIATES INC
ENGINEERING ARCHITECTURE LAND SURVEYING
809 EAST 2ND STREET, DIXON, IL 61021 0367
T: 815 284 3381 DES GN F RM: #184 000918

USER NAME = greg	DESIGNED - GBG	REVISED -	
	DRAWN - KRH	REVISED -	
PLOT SCALE = $SCALE$	CHECKED - GBG	REVISED -	
PLOT DATE = 11/19/2024	DATE - 11-30-2023	REVISED -	

STATE OF ILLINOIS
DEPARTMENT OF TRANSPORTATION

DRAINAGE, GRADING, AND EROSION CONTROL PLAN
I-64

SCALE: 1"=50' | SHEET 9 OF 25 SHEETS | STA. 454+00.00 TO STA. 469+00.00

F.A.I RTE.	SECTION	COUNTY	TOTAL SHEETS	SHEET NO.
64	82-(4,5,6,7)-1RS-2	ST. CLAIR	388	140

CONTRACT NO. 76R99

ILLINOIS | FED. AID PROJECT

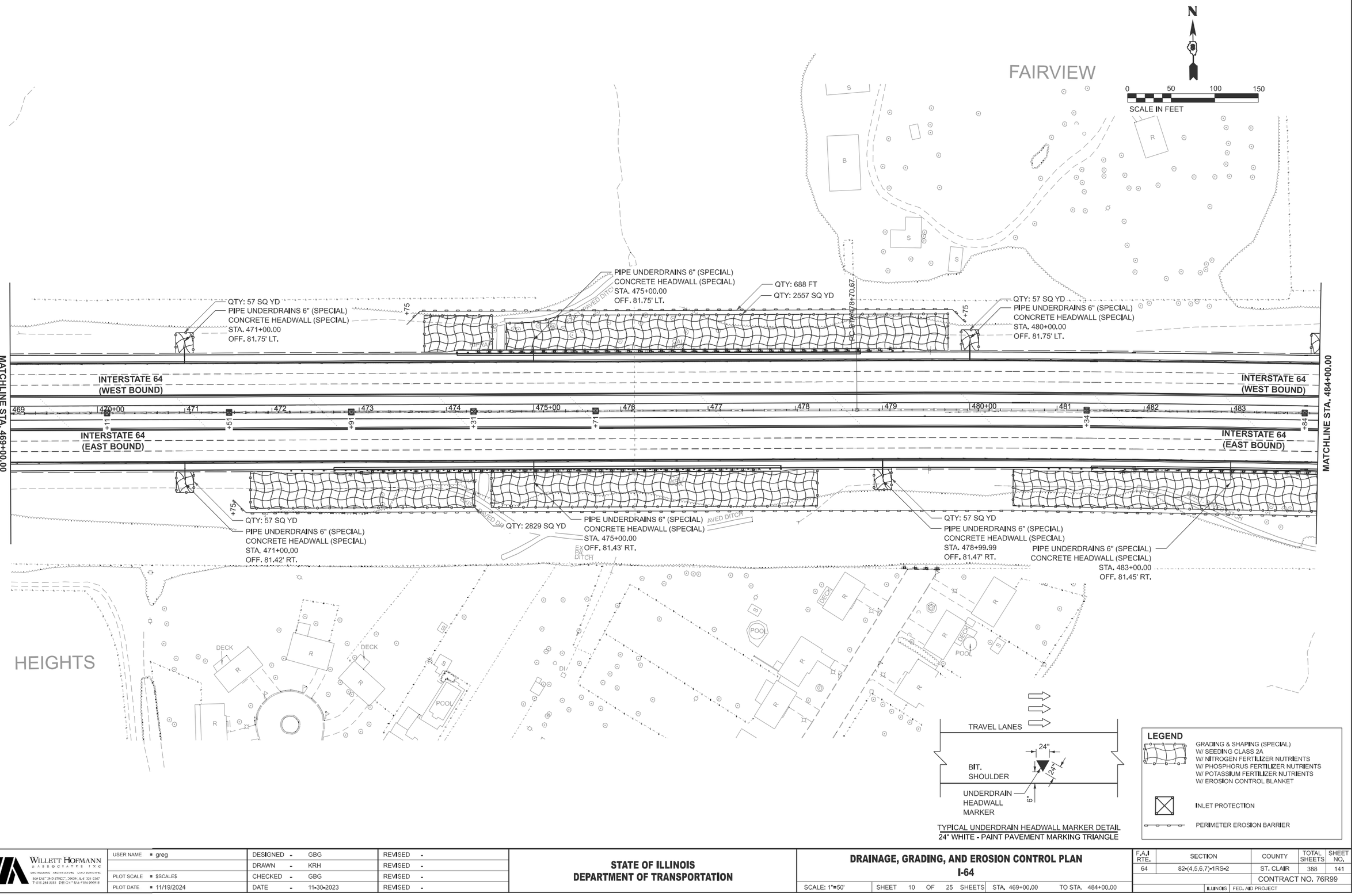

MODEL: I64_CL-10 [Sheet]
FILE NAME: S:\PROJECTS\2021\1061D21_IDOTD6\DESIGN\CAD_SHEETS\WO 5\D876R99-sht-eros.dgn

WILLETT HOFMANN & ASSOCIATES INC
ENGINEERING ARCHITECTURE LAND SURVEYING
809 EAST 2ND STREET, DIXON, IL © 301 6367
T 815 284 3381 F 815 284 3757 FAX 1 844 856 9918

USER NAME = greg	DESIGNED - GBG	REVISED -	**STATE OF ILLINOIS**	**DRAINAGE, GRADING, AND EROSION CONTROL PLAN**	
	DRAWN - KRH	REVISED -	**DEPARTMENT OF TRANSPORTATION**	**I-64**	
PLOT SCALE = $SCALE$	CHECKED - GBG	REVISED -		SCALE: 1"=50' SHEET 10 OF 25 SHEETS STA. 469+00.00 TO STA. 484+00.00	
PLOT DATE = 11/19/2024	DATE - 11-30-2023	REVISED -			

F.A.I RTE.	SECTION	COUNTY	TOTAL SHEETS	SHEET NO.
64	82-(4,5,6,7)-1RS-2	ST. CLAIR	388	141
		CONTRACT NO. 76R99		
	ILLINOIS FED. AID PROJECT			

N

0 50 100 150

SCALE IN FEET

QTY: 57 SQ YD
PIPE UNDERDRAINS 6" (SPECIAL)
CONCRETE HEADWALL (SPECIAL)
STA. 484+00.00
OFF. 81.75' LT.

QTY: 776 FT
QTY: 2786 SQ YD

PIPE UNDERDRAINS 6" (SPECIAL)
CONCRETE HEADWALL (SPECIAL)
STA. 488+00,00
OFF. 81.75' LT.

QTY: 29 SQ YD
PIPE UNDERDRAINS 6" (SPECIAL)
CONCRETE HEADWALL (SPECIAL)
STA. 492+00.00
OFF. 81.75' LT.

PIPE UNDERDRAINS, TYPE 1, 6"
LINEAR FOOT - 3017'

QTY: 741 FT
QTY: 2732 SQ YD
PIPE UNDERDRAINS 6" (SPECIAL)
CONCRETE HEADWALL (SPECIAL)
STA. 496+00,00
OFF. 81.75' LT.

TWIST PAVED DITCH

MATCHLINE STA. 484+00.00

INTERSTATE 64
(WEST BOUND)

INTERSTATE 64
(EAST BOUND)

484 485+00 486 487 488 489 490+00 491 492 493 494 495+00 496 497 498

+34 +34 +90 +15 +40 +65 +75

RIPRAP

MATCHLINE STA. 499+00.00

PIPE UNDERDRAINS 6" (SPECIAL)
CONCRETE HEADWALL (SPECIAL)
STA. 486+99.99
OFF. 81.46' RT.

QTY: 4734 SQ YD
QTY: 3578 FT

PIPE UNDERDRAINS 6" (SPECIAL)
CONCRETE HEADWALL (SPECIAL)
STA. 491+00.00
OFF. 81.47' RT.

PIPE UNDERDRAINS, TYPE 1, 6"
LINEAR FOOT - 2938'

QTY: 2897 SQ YD
PIPE UNDERDRAINS 6" (SPECIAL)
CONCRETE HEADWALL (SPECIAL)
STA. 494+99.99
OFF. 81.47' RT.

DECK

TRAVEL LANES

BIT. SHOULDER

UNDERDRAIN HEADWALL MARKER

24"

24"

6"

TYPICAL UNDERDRAIN HEADWALL MARKER DETAIL
24" WHITE - PAINT PAVEMENT MARKING TRIANGLE

LEGEND

GRADING & SHAPING (SPECIAL)
W/ SEEDING CLASS 2A
W/ NITROGEN FERTILIZER NUTRIENTS
W/ PHOSPHORUS FERTILIZER NUTRIENTS
W/ POTASSIUM FERTILIZER NUTRIENTS
W/ EROSION CONTROL BLANKET

INLET PROTECTION

PERIMETER EROSION BARRIER

MODEL: I64_CL-11 [Sheet]
FILE NAME: S:\PROJECTS\2021\1061D21_IDOTD80\DESIGN\CAD_SHEETS\WO_51D876R99-sht-eros.dgn

WILLETT HOFMANN & ASSOCIATES INC
ENGINEERING ARCHITECTURE LAND SURVEYING
909 EAST 29TH STREET, DAVENPORT, IA 52803
T 563.284.3383 F 563.324.3785 FAX 866.890.9918

USER NAME = greg		DESIGNED - GBG		REVISED -	
		DRAWN - KRH		REVISED -	
PLOT SCALE = $SCALE$		CHECKED - GBG		REVISED -	
PLOT DATE = 11/19/2024		DATE - 11-30-2023		REVISED -	

STATE OF ILLINOIS
DEPARTMENT OF TRANSPORTATION

DRAINAGE, GRADING, AND EROSION CONTROL PLAN
I-64

SCALE: 1"=50' | SHEET 11 OF 25 SHEETS | STA. 484+00.00 | TO STA. 499+00.00

F.A.I RTE.	SECTION	COUNTY	TOTAL SHEETS	SHEET NO.
64	82-(4,5,6,7)-1RS-2	ST. CLAIR	388	142
		CONTRACT NO. 76R99		
	ILLINOIS FED. AID PROJECT			

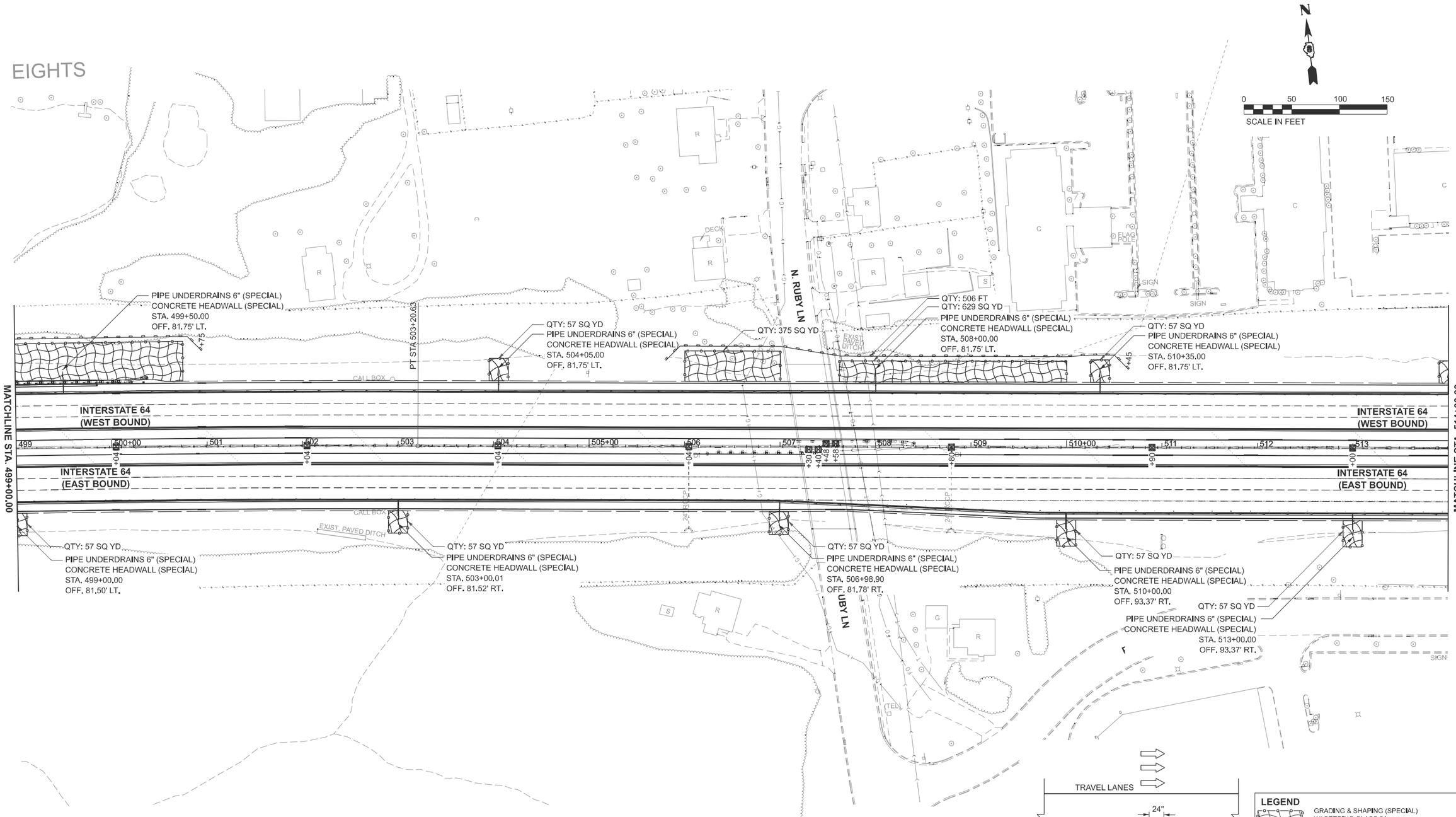

TYPICAL UNDERDRAIN HEADWALL MARKER DETAIL
24" WHITE - PAINT PAVEMENT MARKING TRIANGLE

LEGEND

GRADING & SHAPING (SPECIAL)
W/ SEEDING CLASS 2A
W/ NITROGEN FERTILIZER NUTRIENTS
W/ PHOSPHORUS FERTILIZER NUTRIENTS
W/ POTASSIUM FERTILIZER NUTRIENTS
W/ EROSION CONTROL BLANKET

INLET PROTECTION

PERIMETER EROSION BARRIER

MODEL: I64_CL-12 [Sheet]
FILE NAME: S:\PROJECTS\2021\1061D21_IDOTD8\DESIGN\CAD_SHEETS\WO 5\D876R99-sht-eros.dgn

WILLETT HOFMANN & ASSOCIATES INC
ENGINEERING ARCHITECTURE LAND SURVEYING
809 EAST 2ND STREET, DIXON, IL 61021 0367
T 815 284 3381 DES GN F RM: #184 000918

USER NAME = greg	DESIGNED - GBG	REVISED -	
	DRAWN - KRH	REVISED -	
PLOT SCALE = $SCALE$	CHECKED - GBG	REVISED -	
PLOT DATE = 11/19/2024	DATE - 11-30-2023	REVISED -	

STATE OF ILLINOIS
DEPARTMENT OF TRANSPORTATION

DRAINAGE, GRADING, AND EROSION CONTROL PLAN
I-64

SCALE: 1"=50' | SHEET 12 OF 25 SHEETS | STA. 499+00.00 TO STA. 514+00.00

F.A.I RTE.	SECTION	COUNTY	TOTAL SHEETS	SHEET NO.
64	82-(4,5,6,7)-1RS-2	ST. CLAIR	388	143
		CONTRACT NO. 76R99		
		ILLINOIS	FED. AID PROJECT	

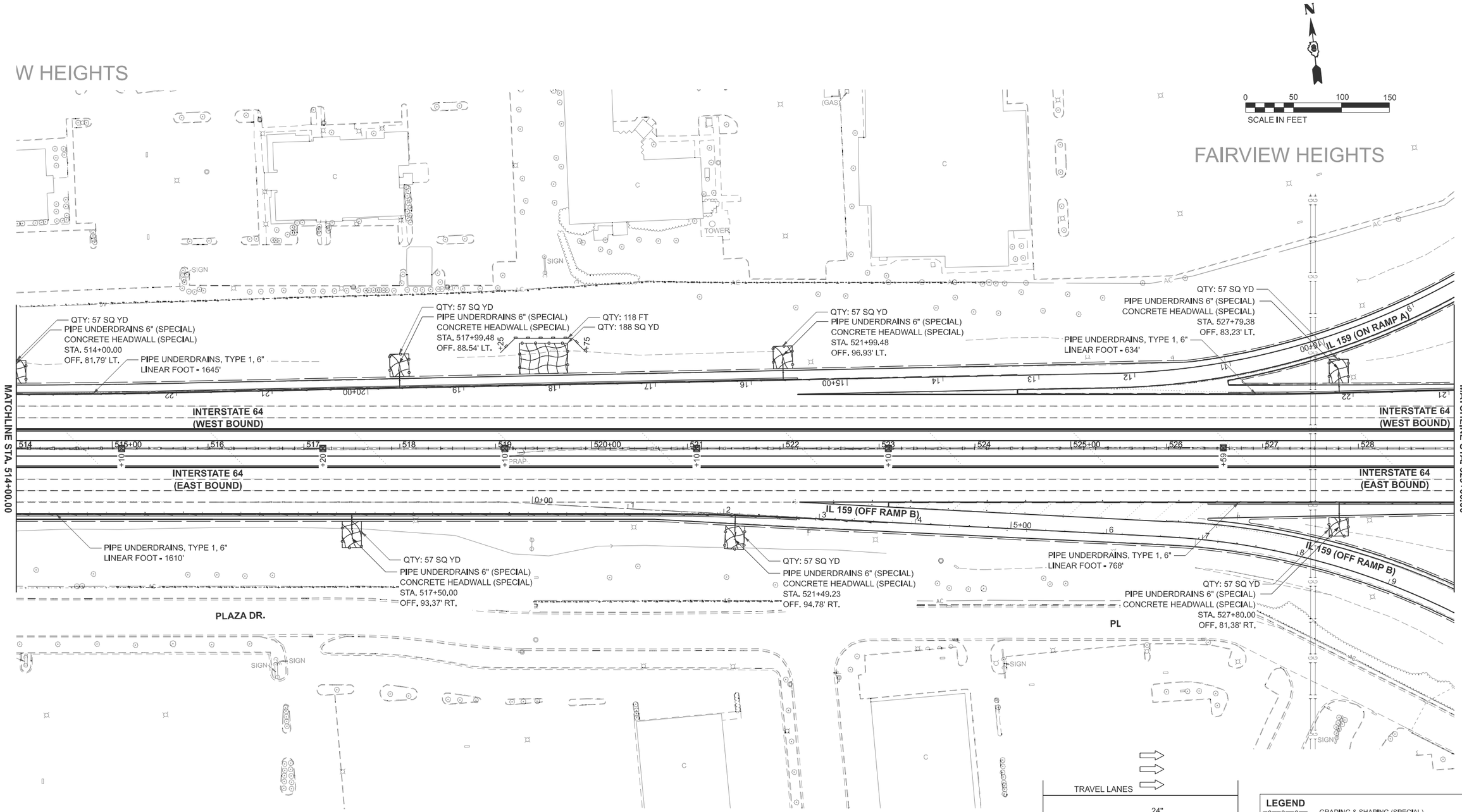

TYPICAL UNDERDRAIN HEADWALL MARKER DETAIL
24" WHITE - PAINT PAVEMENT MARKING TRIANGLE

LEGEND

- GRADING & SHAPING (SPECIAL) W/ SEEDING CLASS 2A W/ NITROGEN FERTILIZER NUTRIENTS W/ PHOSPHORUS FERTILIZER NUTRIENTS W/ POTASSIUM FERTILIZER NUTRIENTS W/ EROSION CONTROL BLANKET
- INLET PROTECTION
- PERIMETER EROSION BARRIER

MODEL: I64_CL-13 [Sheet]
FILE NAME: S:\PROJECTS\2021\1061D21_IDOTD8\DESIGN\CAD_SHEETS\WO 5\D876R99-sht-eros.dgn

WILLETT HOFMANN & ASSOCIATES INC
ENGINEERING ARCHITECTURE LAND SURVEYING
809 EAST 2ND STREET, DIXON, IL 61021 0367
T 815 284 3381 DESIGN FIRM #184 000918

USER NAME = greg	DESIGNED - GBG	REVISED -	
	DRAWN - KRH	REVISED -	
PLOT SCALE = $SCALE$	CHECKED - GBG	REVISED -	
PLOT DATE = 11/19/2024	DATE - 11-30-2023	REVISED -	

STATE OF ILLINOIS
DEPARTMENT OF TRANSPORTATION

DRAINAGE, GRADING, AND EROSION CONTROL PLAN
IL 159 AND I-64

SCALE: 1"=50' | SHEET 13 OF 25 SHEETS | STA. 514+00.00 TO STA. 529+00.00

F.A.I RTE.	SECTION	COUNTY	TOTAL SHEETS	SHEET NO.
64	82-(4,5,6,7)-1RS-2	ST. CLAIR	388	144
		CONTRACT NO. 76R99		
		ILLINOIS	FED. AID PROJECT	

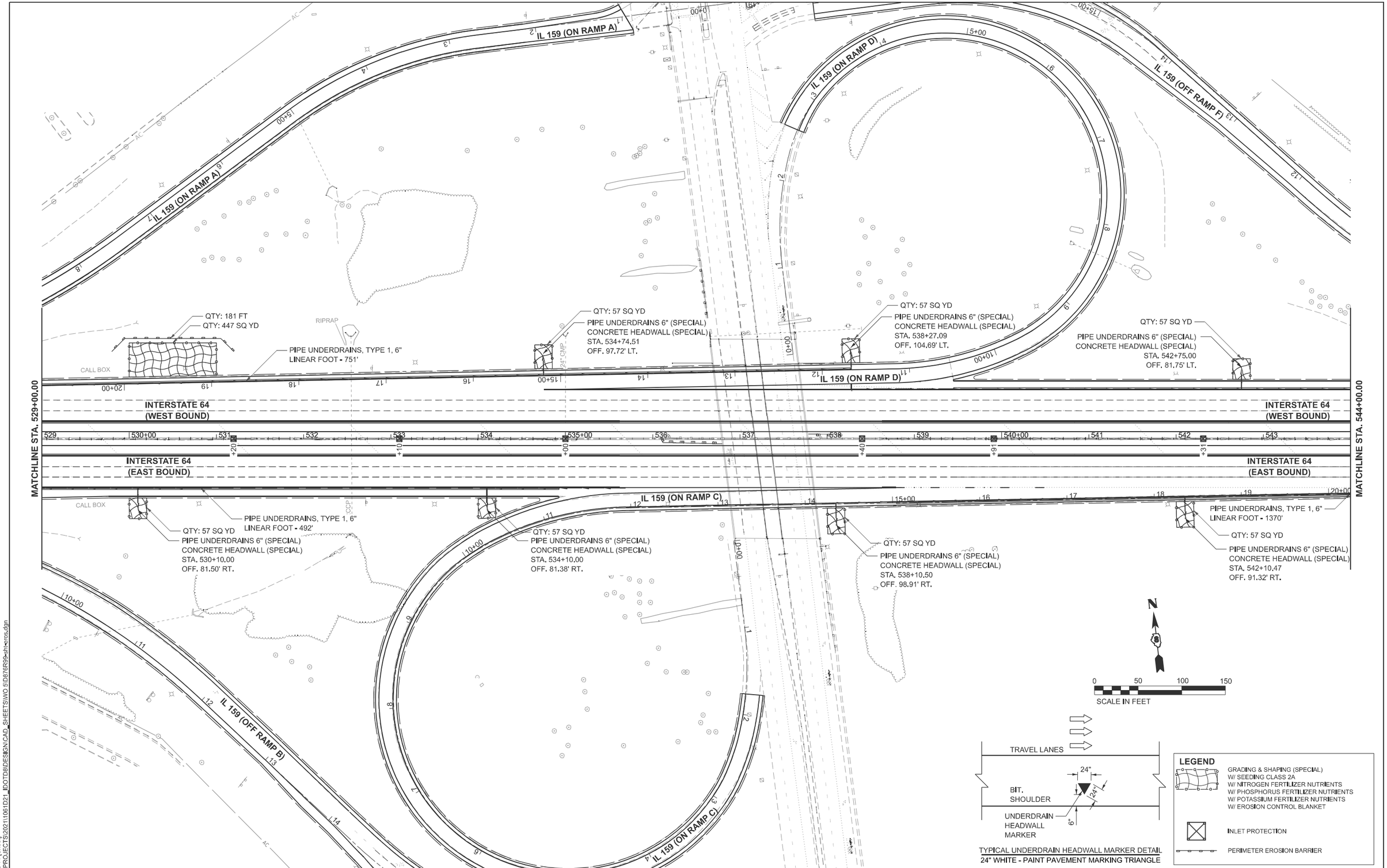

MODEL: I64_CL-14 [Sheet]
FILE NAME: S:\PROJECTS\2021\1061D21_IDOTD8\DESIGN\CAD_SHEETS\WO 5\D876R99-sht-eros.dgn

WILLETT HOFMANN & ASSOCIATES INC
ENGINEERING ARCHITECTURE LAND SURVEYING
809 EAST 2ND STREET, DIXON, IL 61021 0367
T: 815 284 3381 DESIGN FIRM: 184 000918

USER NAME = greg	DESIGNED - GBG	REVISED -	
	DRAWN - KRH	REVISED -	
PLOT SCALE = $SCALE$	CHECKED - GBG	REVISED -	
PLOT DATE = 11/19/2024	DATE - 11-30-2023	REVISED -	

STATE OF ILLINOIS
DEPARTMENT OF TRANSPORTATION

DRAINAGE, GRADING, AND EROSION CONTROL PLAN
IL 159 AND I-64

SCALE: 1"=50' | SHEET 14 OF 25 SHEETS | STA. 529+00.00 TO STA. 544+00.00

F.A.I RTE.	SECTION	COUNTY	TOTAL SHEETS	SHEET NO.
64	82-(4,5,6,7)-1RS-2	ST. CLAIR	388	145
		CONTRACT NO. 76R99		
		ILLINOIS	FED. AID PROJECT	

N

0 50 100 150
SCALE IN FEET

SALEM PL

EXECUTIVE DR

8" CMP

18" CMP

8" PVC

ETHAN ALLEN FURNITURE STORE

FLAG POLE

SIGN

12" CMP

16" CMP

IL 159 (OFF RAMP F)

QTY: 57 SQ YD
PIPE UNDERDRAINS 6" (SPECIAL)
CONCRETE HEADWALL (SPECIAL)
STA. 546+75.00
OFF. 81.75' LT.

PIPE UNDERDRAINS, TYPE 1, 6"
LINEAR FOOT = 1321'

QTY: 293 FT
QTY: 1078 SQ YD

PIPE UNDERDRAINS 6" (SPECIAL)
CONCRETE HEADWALL (SPECIAL)
STA. 557+00.00
OFF. 81.75' LT.

PIPE UNDERDRAINS, TYPE 1, 6"
LINEAR FOOT = 1343'

MATCHLINE STA. 544+00.00

MATCHLINE STA. 559+00.00

INTERSTATE 64
(WEST BOUND)

INTERSTATE 64
(EAST BOUND)

IL 159 (ON RAMP E)

QTY: 57 SQ YD
PIPE UNDERDRAINS, TYPE 1, 6"
LINEAR FOOT = 1571'

PIPE UNDERDRAINS 6" (SPECIAL)
CONCRETE HEADWALL (SPECIAL)
STA. 546+10.41
OFF. 84.04' RT.

QTY: 8173 SQ YD
QTY: 1556 FT

PIPE UNDERDRAINS 6" (SPECIAL)
CONCRETE HEADWALL (SPECIAL)
STA. 553+50.41
OFF. 92.94' RT.

PIPE UNDERDRAINS 6" (SPECIAL)
CONCRETE HEADWALL (SPECIAL)
STA. 557+50.39
OFF. 84.74' RT.

RIPRAP

PAVED DITCH

PLAZA DR

WATER TOWER

FAIRVIEW HEIGHTS

TRAVEL LANES

BIT. SHOULDER

UNDERDRAIN HEADWALL MARKER

24"

24"

6"

TYPICAL UNDERDRAIN HEADWALL MARKER DETAIL
24" WHITE - PAINT PAVEMENT MARKING TRIANGLE

LEGEND

GRADING & SHAPING (SPECIAL)
W/ SEEDING CLASS 2A
W/ NITROGEN FERTILIZER NUTRIENTS
W/ PHOSPHORUS FERTILIZER NUTRIENTS
W/ POTASSIUM FERTILIZER NUTRIENTS
W/ EROSION CONTROL BLANKET

INLET PROTECTION

PERIMETER EROSION BARRIER

MODEL: I64_CL-15 [Sheet]
FILE NAME: S:\PROJECTS\2021\10612\1_IDOT\D8\DESIGN\CAD_SHEETS\WO 5\D876R99-sht-eros.dgn

WILLETT HOFMANN & ASSOCIATES INC
ENGINEERING ARCHITECTURE LAND SURVEYING
800 EAST 96TH STREET, INDIAN, IL 46240
T 317.284.3351 F 317.574.8900

USER NAME = greg	DESIGNED - GBG	REVISED -	
	DRAWN - KRH	REVISED -	
PLOT SCALE = $SCALE$	CHECKED - GBG	REVISED -	
PLOT DATE = 11/19/2024	DATE - 11-30-2023	REVISED -	

STATE OF ILLINOIS
DEPARTMENT OF TRANSPORTATION

DRAINAGE, GRADING, AND EROSION CONTROL PLAN
IL 159 AND I-64

SCALE: 1"=50' | SHEET 15 OF 25 SHEETS | STA. 544+00.00 | TO STA. 559+00.00

F.A.I RTE.	SECTION	COUNTY	TOTAL SHEETS	SHEET NO.
64	82-(4,5,6,7)-1RS-2	ST. CLAIR	388	146
		CONTRACT NO. 76R99		
	ILLINOIS FED. AID PROJECT			

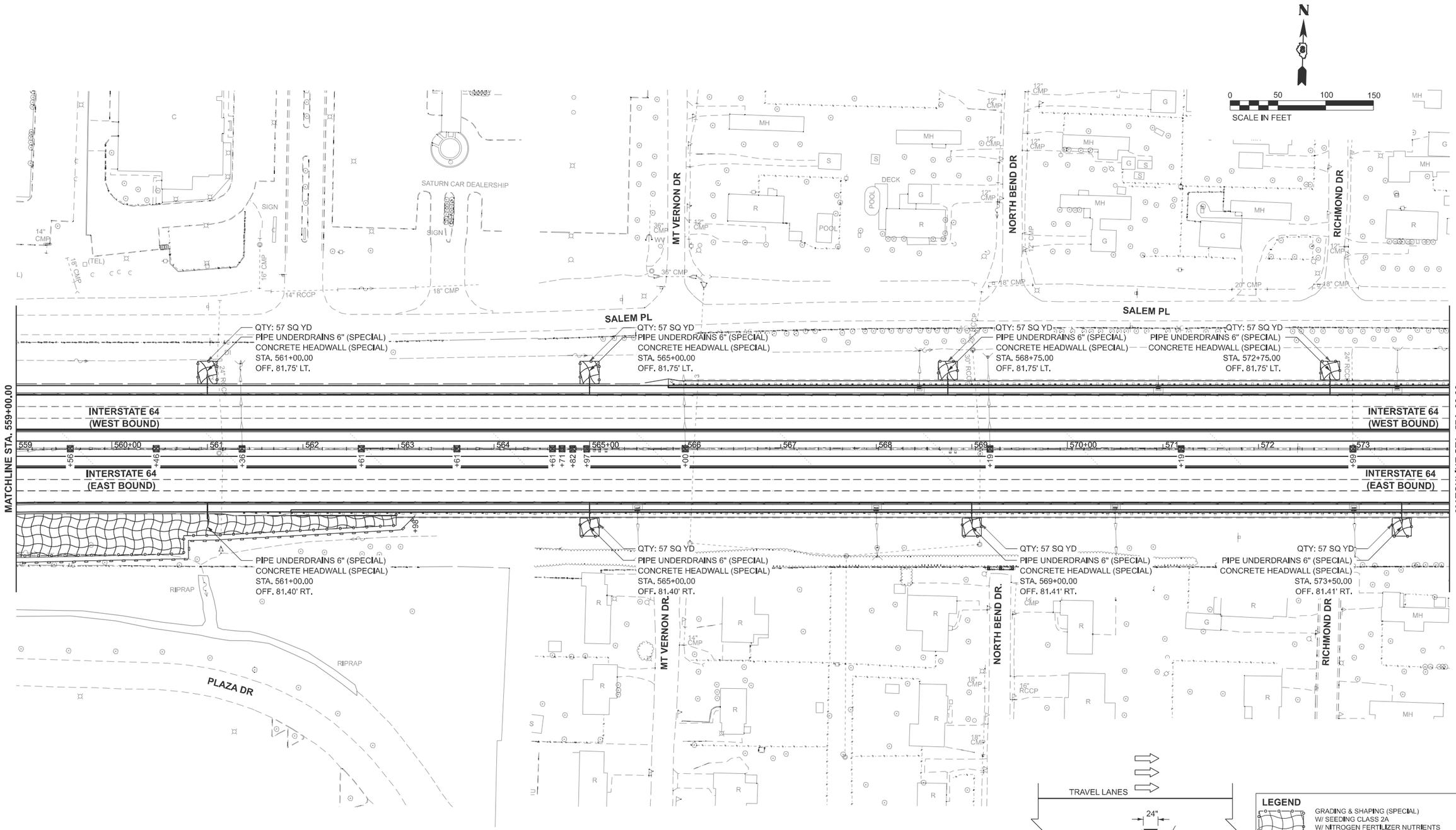

MODEL: I64_CL-16 [Sheet]
FILE NAME: S:\PROJECTS\2021\1061D21_IDOTD8\DESIGN\CAD_SHEETS\WO 5\D876R99-sht-eros.dgn

WILLETT HOFMANN & ASSOCIATES INC
ENGINEERING ARCHITECTURE LAND SURVEYING
809 EAST 2ND STREET, DIXON, IL 61021-0367
T: 815.284.3381 DESIGN FIRM: 184-000918

USER NAME = greg	DESIGNED - GBG	REVISED -	
	DRAWN - KRH	REVISED -	
PLOT SCALE = $SCALE$	CHECKED - GBG	REVISED -	
PLOT DATE = 11/19/2024	DATE - 11-30-2023	REVISED -	

STATE OF ILLINOIS
DEPARTMENT OF TRANSPORTATION

DRAINAGE, GRADING, AND EROSION CONTROL PLAN
I-64

SCALE: 1"=50' | SHEET 16 OF 25 SHEETS | STA. 559+00.00 TO STA. 574+00.00

F.A.I RTE.	SECTION	COUNTY	TOTAL SHEETS	SHEET NO.
64	82-(4,5,6,7)-1RS-2	ST. CLAIR	388	147
		CONTRACT NO. 76R99		
		ILLINOIS	FED. AID PROJECT	

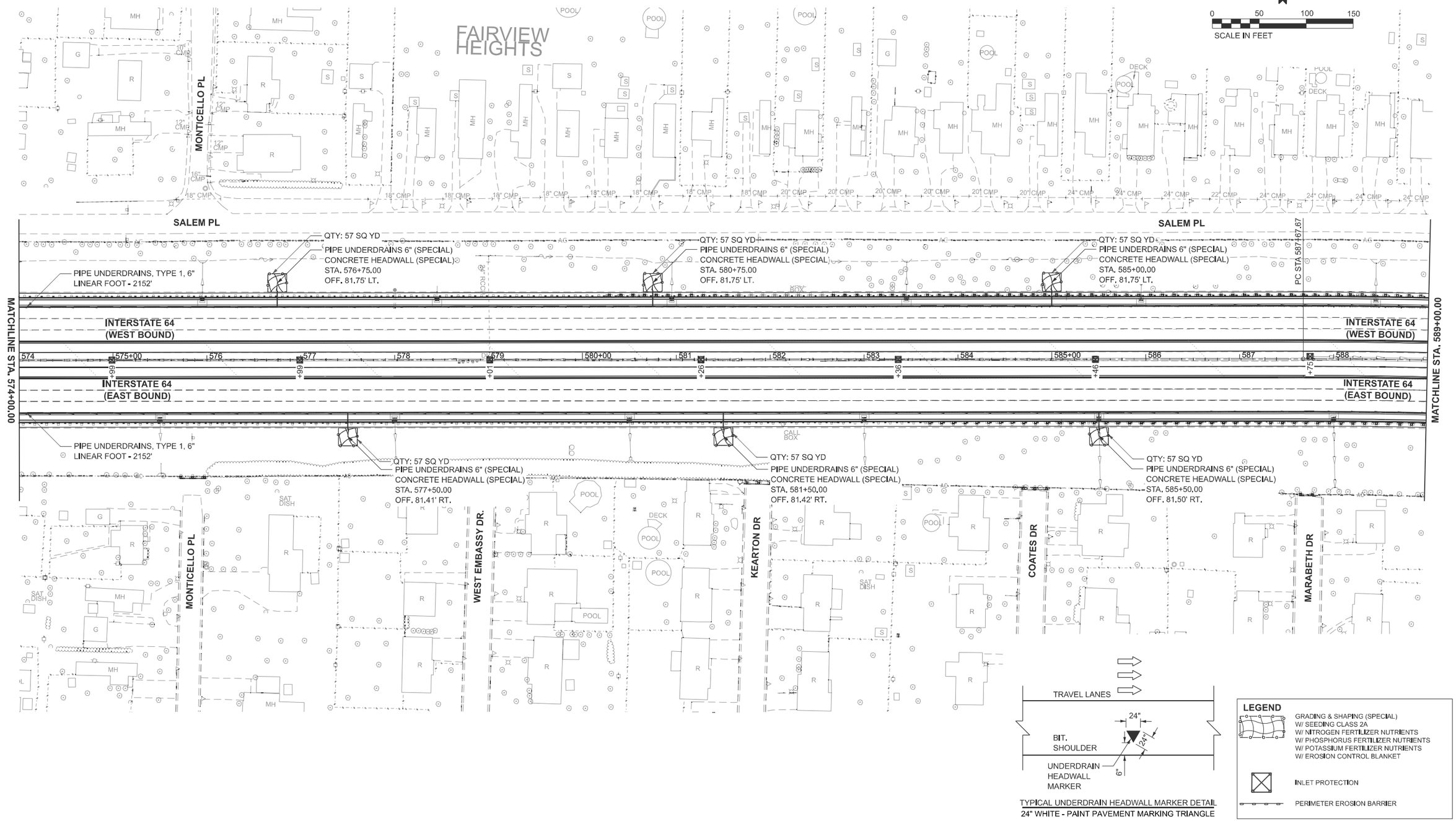

MODEL: I64_CL-17 [Sheet]
FILE NAME: S:\PROJECTS\2021\1061D21_IDOT\D6\DESIGN\CAD_SHEETS\WO 5\D876R99-sht-eros.dgn

WILLETT HOFMANN & ASSOCIATES INC
ENGINEERING ARCHITECTURE LAND SURVEYING
809 EAST 2ND STREET, DIXON, IL 61021-0367
T 815 284 3381 F 815 284 3757 FAX 284 3951

USER NAME = greg		DESIGNED - GBG		REVISED -	
		DRAWN - KRH		REVISED -	
PLOT SCALE = $SCALE$		CHECKED - GBG		REVISED -	
PLOT DATE = 11/19/2024		DATE - 11-30-2023		REVISED -	

STATE OF ILLINOIS
DEPARTMENT OF TRANSPORTATION

DRAINAGE, GRADING, AND EROSION CONTROL PLAN
I-64

SCALE: 1"=50' | SHEET 17 OF 25 SHEETS | STA. 574+00.00 | TO STA. 589+00.00

F.A.I RTE.	SECTION	COUNTY	TOTAL SHEETS	SHEET NO.
64	82-(4,5,6,7)-1RS-2	ST. CLAIR	388	148
		CONTRACT NO. 76R99		
	ILLINOIS FED. AID PROJECT			

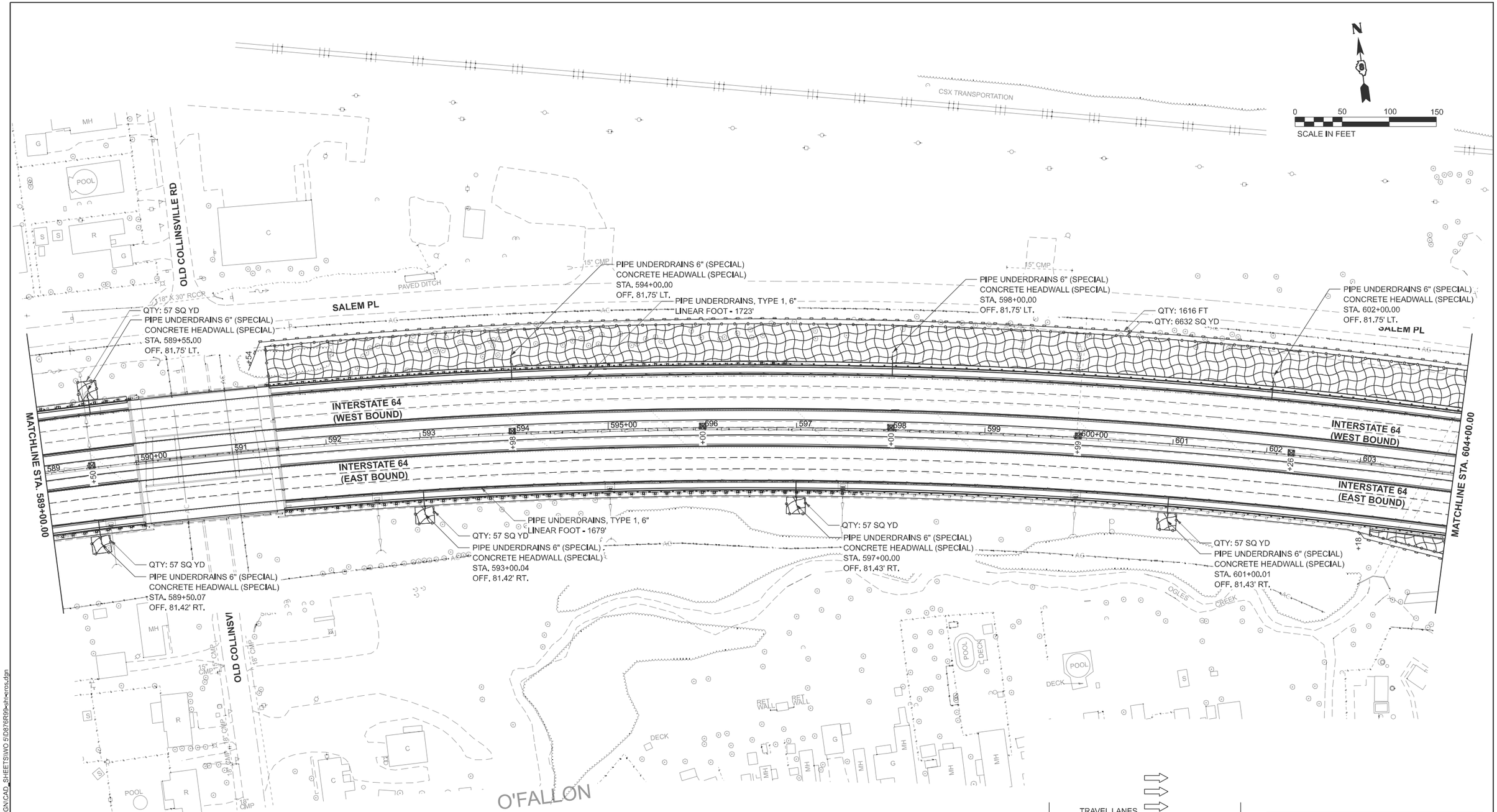

TYPICAL UNDERDRAIN HEADWALL MARKER DETAIL
24" WHITE - PAINT PAVEMENT MARKING TRIANGLE

LEGEND

- GRADING & SHAPING (SPECIAL) W/ SEEDING CLASS 2A W/ NITROGEN FERTILIZER NUTRIENTS W/ PHOSPHORUS FERTILIZER NUTRIENTS W/ POTASSIUM FERTILIZER NUTRIENTS W/ EROSION CONTROL BLANKET
- INLET PROTECTION
- PERIMETER EROSION BARRIER

MODEL: I64_CL-18 [Sheet]
FILE NAME: S:\PROJECTS\2021\1061D21_IDOTD8\DESIGN\CAD_SHEETS\WO 5\D876R99-sht-eros.dgn

WILLETT HOFMANN & ASSOCIATES INC
ENGINEERING ARCHITECTURE LAND SURVEYING
809 EAST 2ND STREET, DIXON, IL 61021 0367
T: 815 284 3381 DESIGN FIRM: #184 000918

USER NAME = greg	DESIGNED - GBG	REVISED -	
	DRAWN - KRH	REVISED -	
PLOT SCALE = $SCALE$	CHECKED - GBG	REVISED -	
PLOT DATE = 11/19/2024	DATE - 11-30-2023	REVISED -	

STATE OF ILLINOIS
DEPARTMENT OF TRANSPORTATION

DRAINAGE, GRADING, AND EROSION CONTROL PLAN
I-64

SCALE: 1"=50' | SHEET 18 OF 25 SHEETS | STA. 589+00.00 TO STA. 604+00.00

F.A.I RTE.	SECTION	COUNTY	TOTAL SHEETS	SHEET NO.
64	82-(4,5,6,7)-1RS-2	ST. CLAIR	388	149
		CONTRACT NO. 76R99		
		ILLINOIS	FED. AID PROJECT	

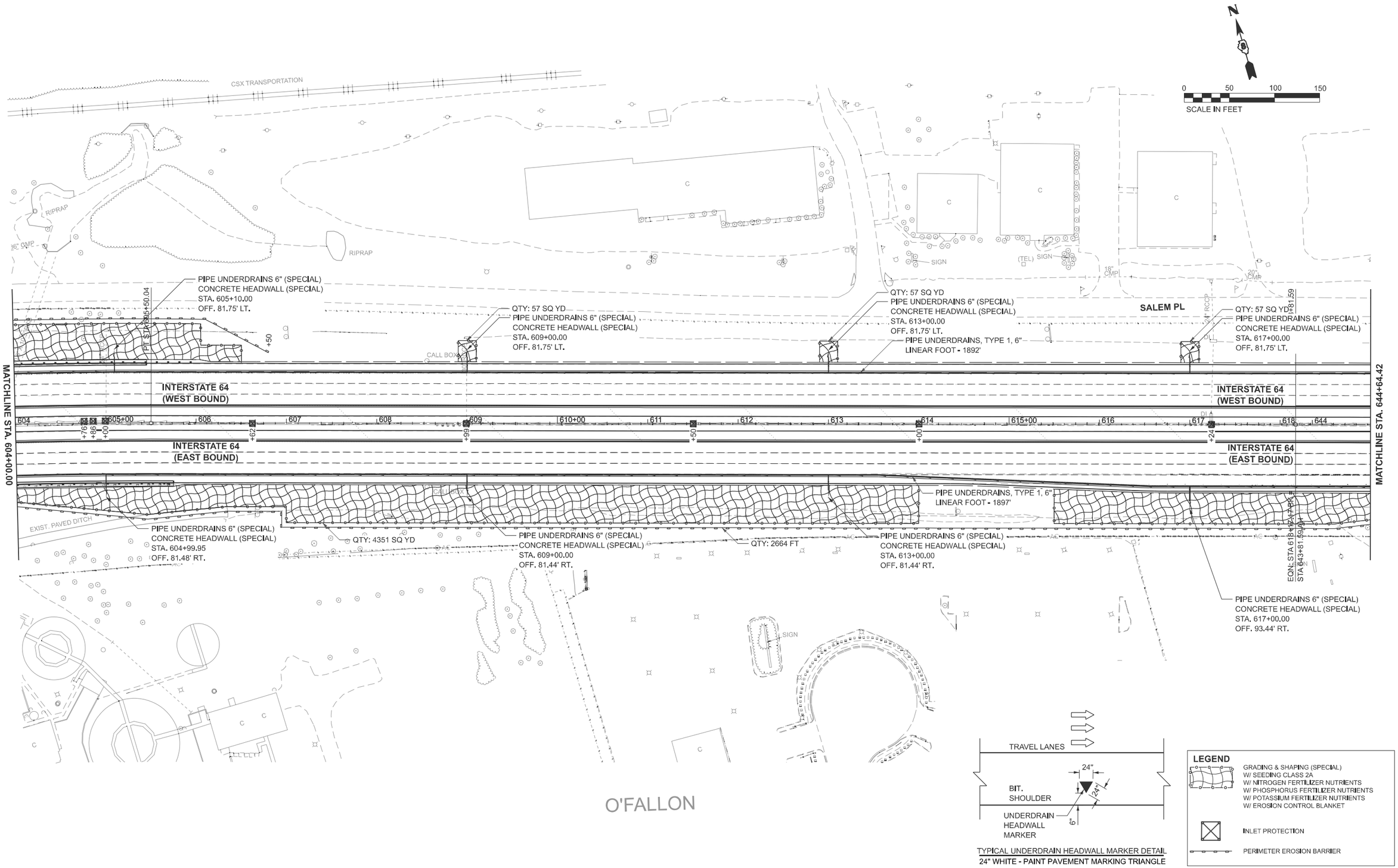

MODEL: I64_CL+19 [Sheet]
FILE NAME: S:\PROJECTS\2021\1061D21_IDOTD8\DESIGN\CAD_SHEETS\WO 5\D876R99-sht-eros.dgn

WILLETT HOFMANN & ASSOCIATES INC
ENGINEERING ARCHITECTURE LAND SURVEYING
809 EAST judd STREET, DAVIS, IL 61 301 6367
T 815 284 3381 F 815 674 7464 FAX 284 956918

USER NAME = greg	DESIGNED - GBG	REVISED -	**STATE OF ILLINOIS**	**DRAINAGE, GRADING, AND EROSION CONTROL PLAN**	
	DRAWN - KRH	REVISED -	**DEPARTMENT OF TRANSPORTATION**	**I-64**	
PLOT SCALE = $SCALE$	CHECKED - GBG	REVISED -		SCALE: 1"=50' SHEET 19 OF 25 SHEETS STA. 604+00.00 TO STA. 644+64.42 R2	
PLOT DATE = 11/19/2024	DATE - 11-30-2023	REVISED -			

F.A.I RTE.	SECTION	COUNTY	TOTAL SHEETS	SHEET NO.
64	82-(4,5,6,7)-1RS-2	ST. CLAIR	388	150
		CONTRACT NO. 76R99		
	ILLINOIS FED. AID PROJECT			

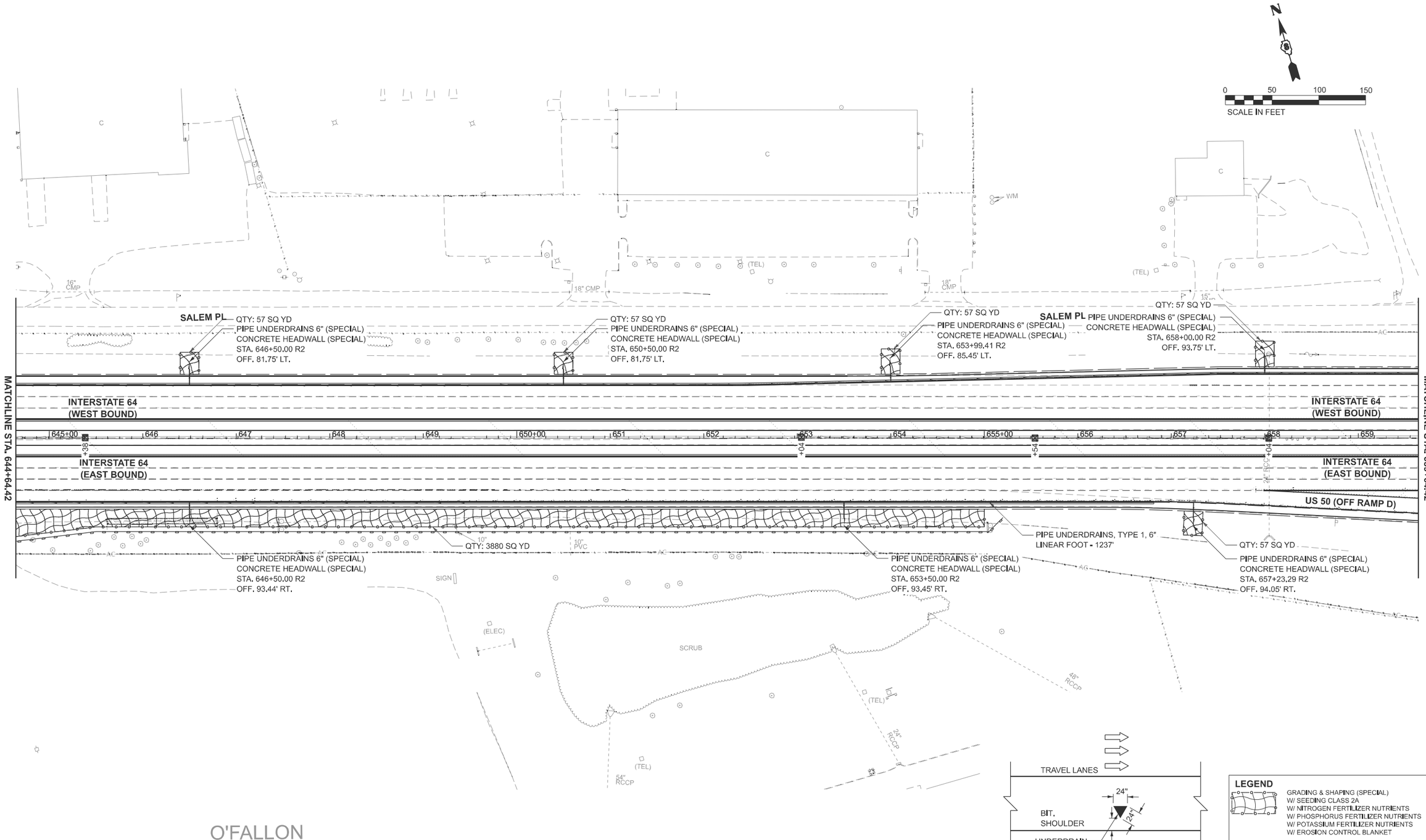

TYPICAL UNDERDRAIN HEADWALL MARKER DETAIL
24" WHITE - PAINT PAVEMENT MARKING TRIANGLE

LEGEND

- GRADING & SHAPING (SPECIAL) W/ SEEDING CLASS 2A W/ NITROGEN FERTILIZER NUTRIENTS W/ PHOSPHORUS FERTILIZER NUTRIENTS W/ POTASSIUM FERTILIZER NUTRIENTS W/ EROSION CONTROL BLANKET
- INLET PROTECTION
- PERIMETER EROSION BARRIER

MODEL: I64_CL-20 [Sheet]
FILE NAME: S:\PROJECTS\2021\1061D21_IDOTD8\DESIGN\CAD_SHEETS\WO 5\D876R99-sht-eros.dgn

WILLETT HOFMANN & ASSOCIATES INC
ENGINEERING ARCHITECTURE LAND SURVEYING
809 EAST 2ND STREET, DIXON, IL 61021 0367
T 815 284 3381 DES GN F RM: #184 000918

USER NAME = greg	DESIGNED - GBG	REVISED -	
	DRAWN - KRH	REVISED -	
PLOT SCALE = $SCALE$	CHECKED - GBG	REVISED -	
PLOT DATE = 11/19/2024	DATE - 11-30-2023	REVISED -	

STATE OF ILLINOIS
DEPARTMENT OF TRANSPORTATION

DRAINAGE, GRADING, AND EROSION CONTROL PLAN
I-64

SCALE: 1"=50' | SHEET 20 OF 25 SHEETS | STA. 644+64.42 R2 TO STA. 659+64.42 R2

F.A.I RTE.	SECTION	COUNTY	TOTAL SHEETS	SHEET NO.
64	82-(4,5,6,7)-1RS-2	ST. CLAIR	388	151
		CONTRACT NO. 76R99		
		ILLINOIS	FED. AID PROJECT	

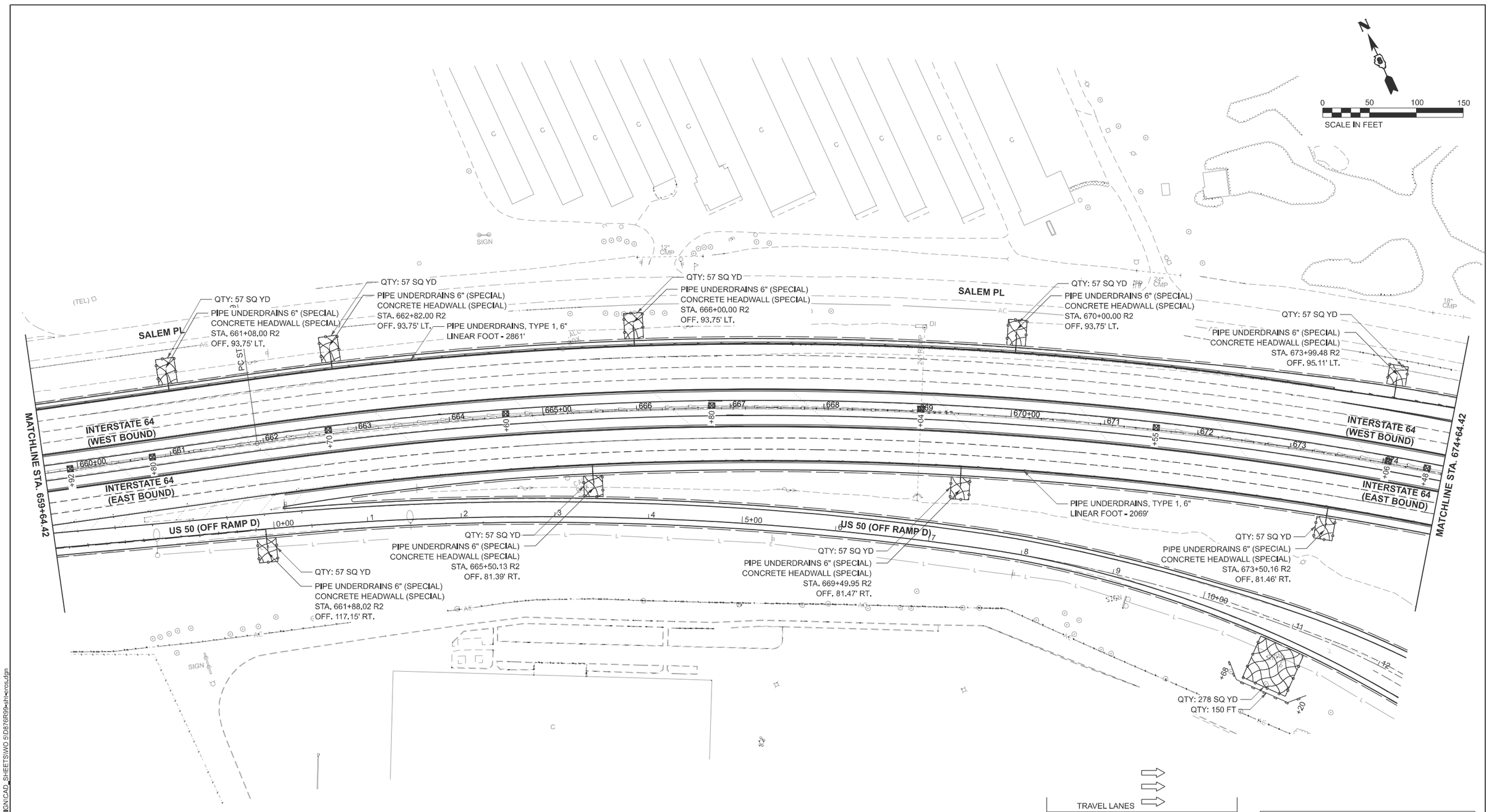

MODEL: I64_CL-21 [Sheet]
FILE NAME: S:\PROJECTS\2021\1061D21_IDOTD8\DESIGN\CAD_SHEETS\WO 5\D876R99-sht-eros.dgn

WILLETT HOFMANN & ASSOCIATES INC
LAND PLANNING ARCHITECTURE LAND SURVEYING
800 EAST 96th STREET, OVERLAND PARK, IL 60 321 6367
T 913 284 3333 F 913 C+T 816 994 999918

USER NAME = greg	DESIGNED - GBG	REVISED -	STATE OF ILLINOIS DEPARTMENT OF TRANSPORTATION	DRAINAGE, GRADING, AND EROSION CONTROL PLAN HWY 50 AND I-64	
	DRAWN - KRH	REVISED -			
PLOT SCALE = $SCALE$	CHECKED - GBG	REVISED -			
PLOT DATE = 11/19/2024	DATE - 11-30-2023	REVISED -		SCALE: 1"=50' SHEET 21 OF 25 SHEETS STA. 659+64.42 R2 TO STA. 674+64.42 R2	

F.A.I RTE.	SECTION	COUNTY	TOTAL SHEETS	SHEET NO.
64	82-(4,5,6,7)-1RS-2	ST. CLAIR	388	152
		CONTRACT NO. 76R99		
	ILLINOIS FED. AID PROJECT			

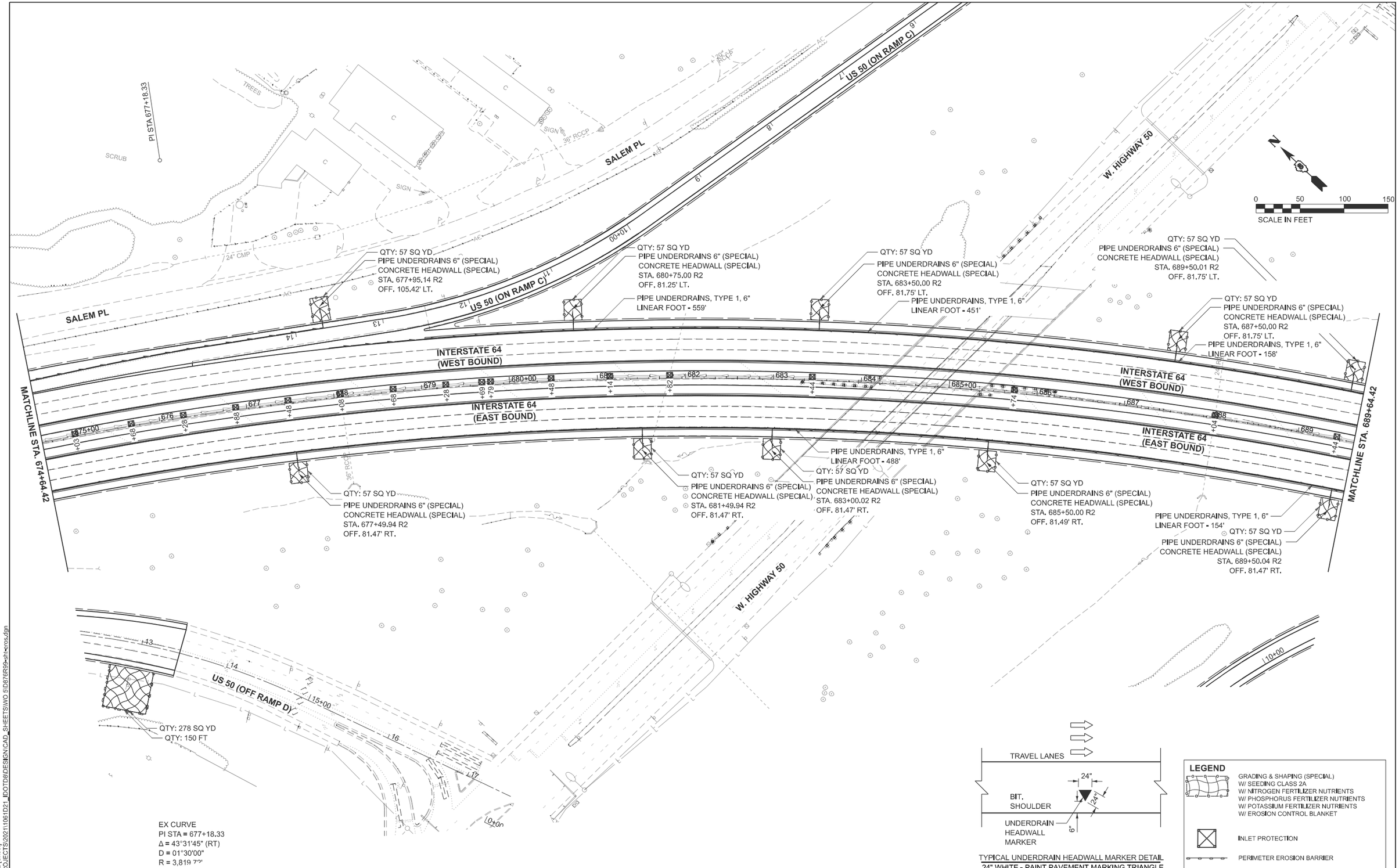

MODEL: I64_CL-22 [Sheet]
FILE NAME: S:\PROJECTS\2021\1061D21_IDOTD8\DESIGN\CAD_SHEETS\WO 5\D876R99-sht-eros.dgn

WILLETT HOFMANN & ASSOCIATES INC	USER NAME = greg	DESIGNED - GBG	REVISED -	STATE OF ILLINOIS DEPARTMENT OF TRANSPORTATION	DRAINAGE, GRADING, AND EROSION CONTROL PLAN HWY 50 AND I-64
		DRAWN - KRH	REVISED -		
	PLOT SCALE = $SCALE$	CHECKED - GBG	REVISED -		
	PLOT DATE = 11/19/2024	DATE - 11-30-2023	REVISED -		SCALE: 1"=50' SHEET 22 OF 25 SHEETS STA. 674+64.42 R2 TO STA. 689+64.42 R2

F.A.I RTE.	SECTION	COUNTY	TOTAL SHEETS	SHEET NO.
64	82-(4,5,6,7)-1RS-2	ST. CLAIR	388	153
		CONTRACT NO. 76R99		
		ILLINOIS FED. AID PROJECT		

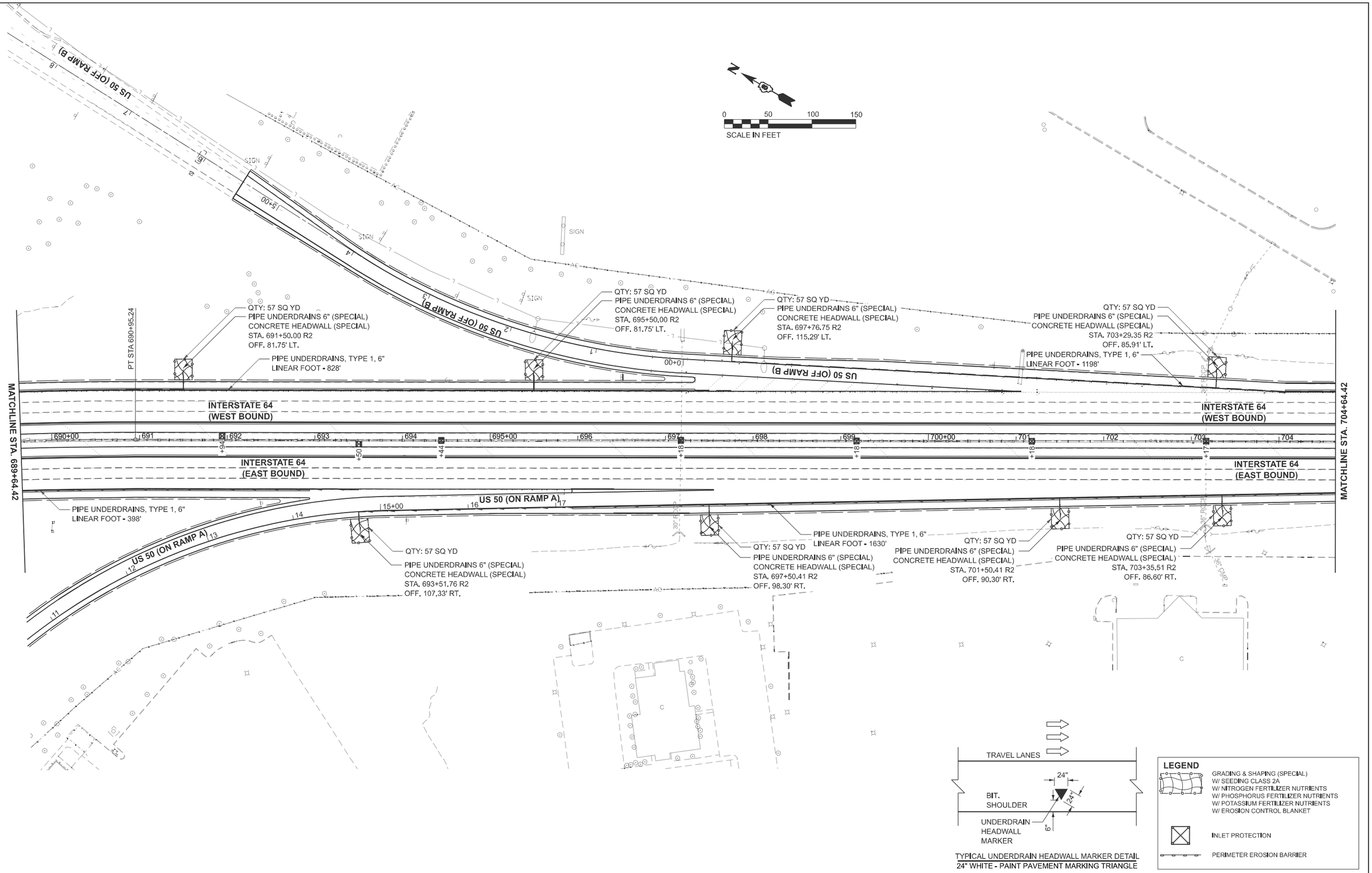

MODEL: I64_CL-23 [Sheet]
FILE NAME: S:\PROJECTS\2021\1061D21_IDOTD8\DESIGN\CAD_SHEETS\WO 5\D876R99-sht-eros.dgn

WILLETT HOFMANN & ASSOCIATES INC
ENGINEERING ARCHITECTURE LAND SURVEYING
809 EAST 2ND STREET, DIXON, IL 61021 0367
T 815 284 3381 DESIGN FIRM #184 000918

USER NAME = greg	DESIGNED - GBG	REVISED -	
	DRAWN - KRH	REVISED -	
PLOT SCALE = $SCALE$	CHECKED - GBG	REVISED -	
PLOT DATE = 11/19/2024	DATE - 11-30-2023	REVISED -	

STATE OF ILLINOIS
DEPARTMENT OF TRANSPORTATION

DRAINAGE, GRADING, AND EROSION CONTROL PLAN
HWY 50 AND I-64

SCALE: 1"=50' | SHEET 23 OF 25 SHEETS | STA. 689+64.42 R2 TO STA. 704+64.42 R2

F.A.I RTE.	SECTION	COUNTY	TOTAL SHEETS	SHEET NO.
64	82-(4,5,6,7)-1RS-2	ST. CLAIR	388	154
		CONTRACT NO. 76R99		
		ILLINOIS	FED. AID PROJECT	

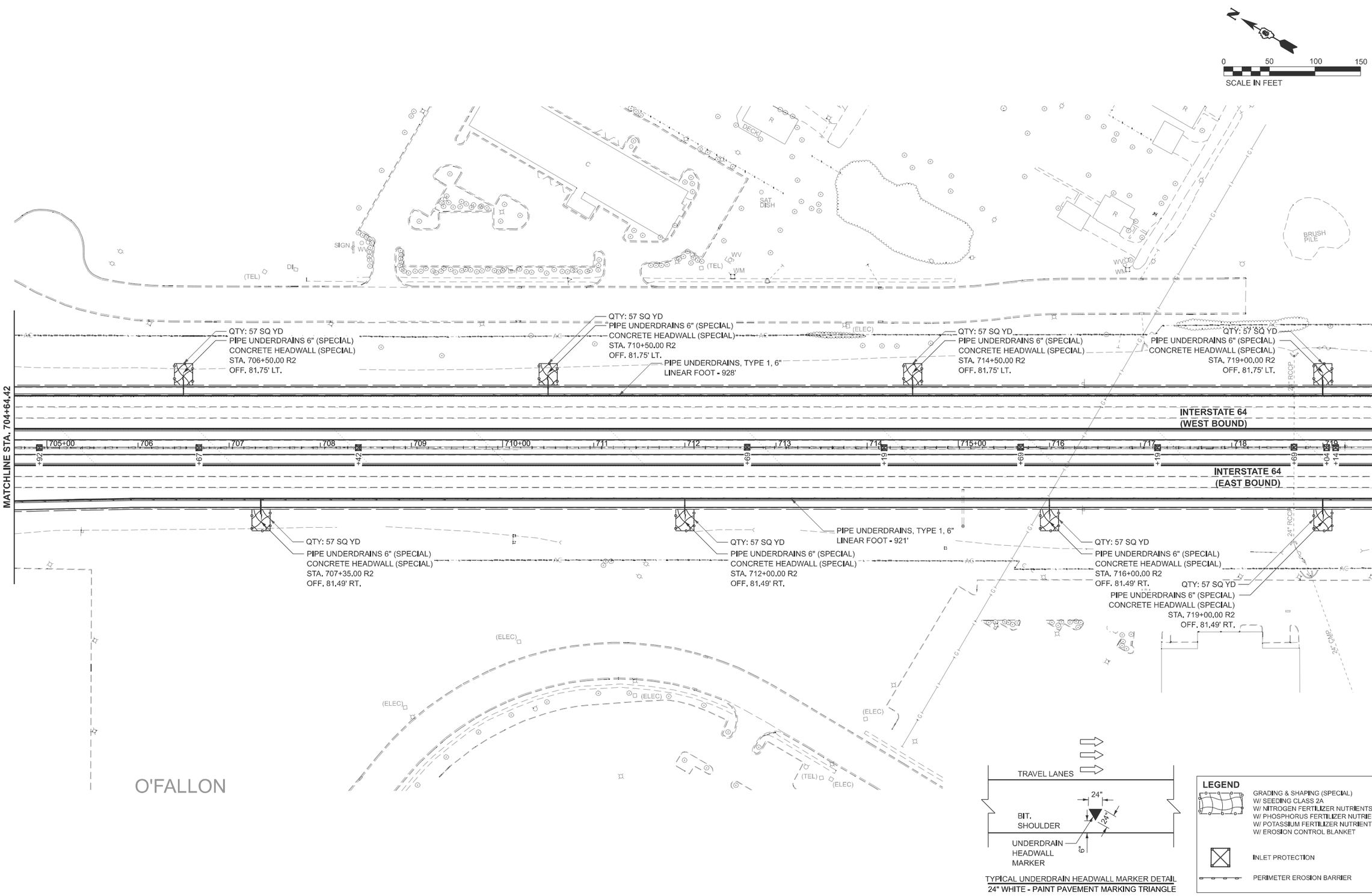

MODEL: I64_CL-24 [Sheet]
FILE NAME: S:\PROJECTS\2021\1061D21_IDOT\D&DESIGN\CAD_SHEETS\WO 5\D876R99-sht-eros.dgn

WILLETT HOFMANN & ASSOCIATES INC
ENGINEERING ARCHITECTURE LAND SURVEYING
804 EAST 慶O STREET, DANVILLE, IL 61 321 0347
T 815 284 3361 D25 G47 FAX 1184 099918

USER NAME = greg	DESIGNED - GBG	REVISED -
	DRAWN - KRH	REVISED -
PLOT SCALE = $SCALE$	CHECKED - GBG	REVISED -
PLOT DATE = 11/19/2024	DATE - 11-30-2023	REVISED -

STATE OF ILLINOIS
DEPARTMENT OF TRANSPORTATION

DRAINAGE, GRADING, AND EROSION CONTROL PLAN
I-64

SCALE: 1"=50' | SHEET 24 OF 25 SHEETS | STA. 704+64.42 R2 | TO STA. 719+64.42 R2

F.A.I RTE.	SECTION	COUNTY	TOTAL SHEETS	SHEET NO.
64	82-(4,5,6,7)-1RS-2	ST. CLAIR	388	155
		CONTRACT NO. 76R99		
	ILLINOIS FED. AID PROJECT			

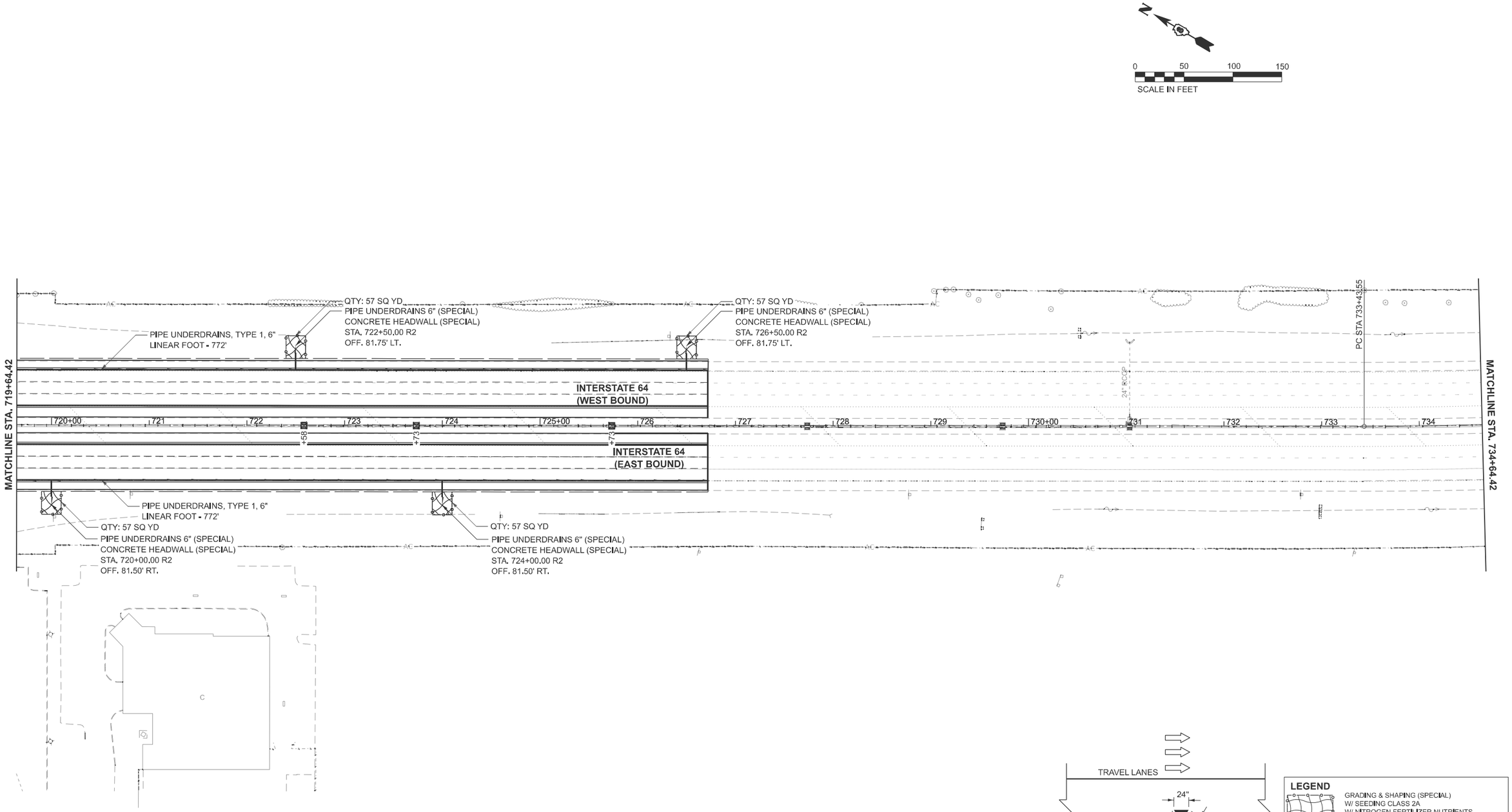

TYPICAL UNDERDRAIN HEADWALL MARKER DETAIL
24" WHITE - PAINT PAVEMENT MARKING TRIANGLE

LEGEND

- GRADING & SHAPING (SPECIAL) W/ SEEDING CLASS 2A W/ NITROGEN FERTILIZER NUTRIENTS W/ PHOSPHORUS FERTILIZER NUTRIENTS W/ POTASSIUM FERTILIZER NUTRIENTS W/ EROSION CONTROL BLANKET
- INLET PROTECTION
- PERIMETER EROSION BARRIER

MODEL: I64_CL-25 [Sheet]
FILE NAME: S:\PROJECTS\2021\1061D21_IDOTD8\DESIGN\CAD_SHEETS\WO 5\D876R99-sht-eros.dgn

WILLETT HOFMANN & ASSOCIATES INC
ENGINEERING ARCHITECTURE LAND SURVEYING
809 EAST 2ND STREET, DIXON, IL 61021 0367
T 815 284 3381 DESIGN FIRM #184-000918

USER NAME = greg	DESIGNED - GBG	REVISED -	
	DRAWN - KRH	REVISED -	
PLOT SCALE = $SCALE$	CHECKED - GBG	REVISED -	
PLOT DATE = 11/19/2024	DATE - 11-30-2023	REVISED -	

STATE OF ILLINOIS
DEPARTMENT OF TRANSPORTATION

DRAINAGE, GRADING, AND EROSION CONTROL PLAN
I-64

SCALE: 1"=50' | SHEET 25 OF 25 SHEETS | STA. 719+64.42 R2 TO STA. 734+64.42 R2

F.A.I RTE.	SECTION	COUNTY	TOTAL SHEETS	SHEET NO.
64	82-(4,5,6,7)-1RS-2	ST. CLAIR	388	156

CONTRACT NO. 76R99

ILLINOIS | FED. AID PROJECT

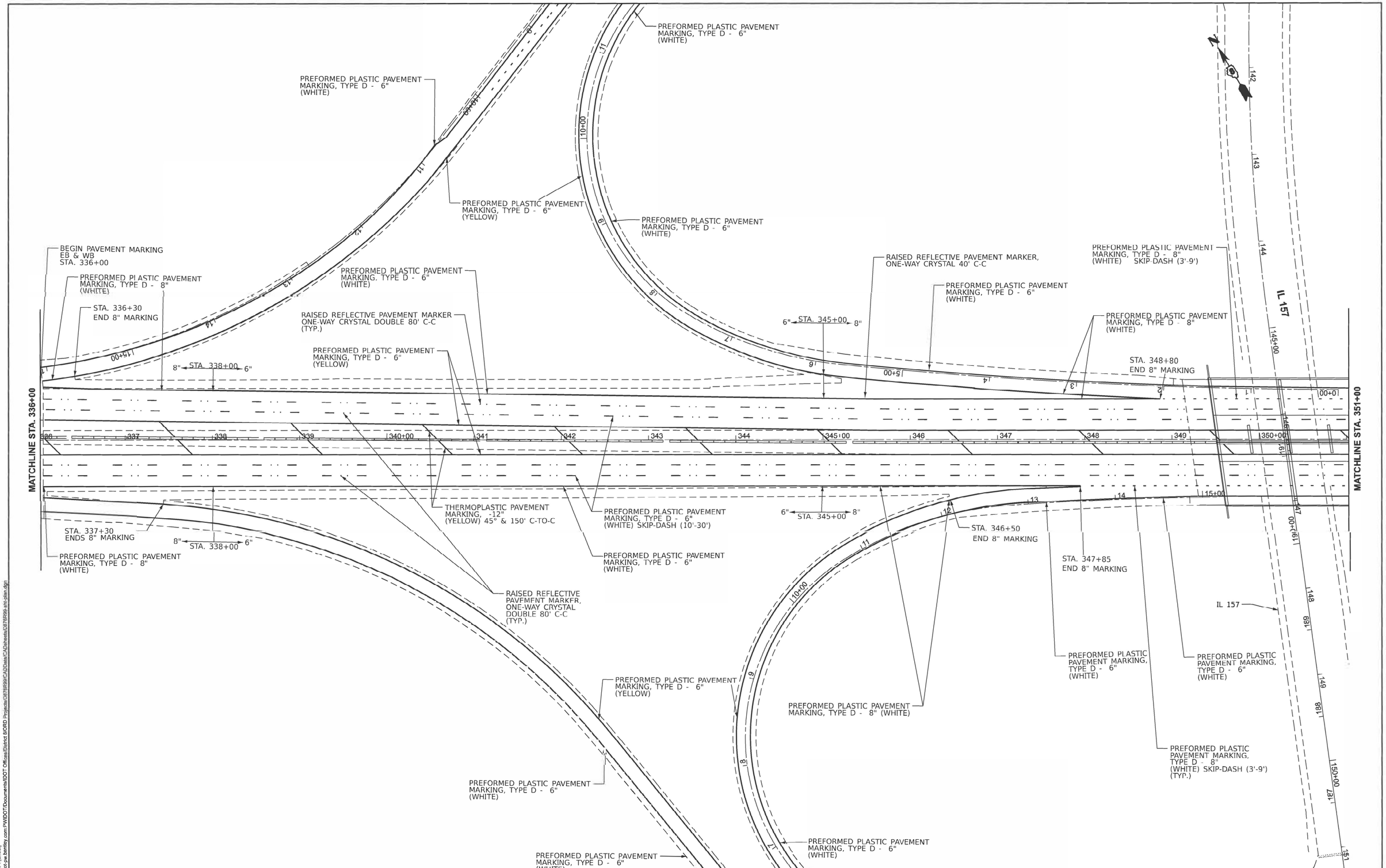

MODEL: EX64 - Plan 1 [Sheet]
FILE NAME: pw://idot-pw.bentley.com:PWIDOT/Documents/IDOT Offices/District 8/ORD Projects/D876R99/CADData/CADsheets/D876R99-sht-plan.dgn

USER NAME = Kevin.Lewis	DESIGNED -	REVISED -	
	DRAWN -	REVISED -	
PLOT SCALE = $SCALE$	CHECKED -	REVISED -	
PLOT DATE = 2/7/2025	DATE -	REVISED -	

STATE OF ILLINOIS
DEPARTMENT OF TRANSPORTATION

PAVEMENT MARKING PLANS

SCALE: | SHEET 1 OF 24 SHEETS | STA. | TO STA.

F.A.I. RTE.	SECTION	COUNTY	TOTAL SHEETS	SHEET NO.
64	82-(4, 5, 6, 7)-1RS-2	ST. CLAIR	388	157
		CONTRACT NO. 76R99		
		ILLINOIS	FED. AID PROJECT	

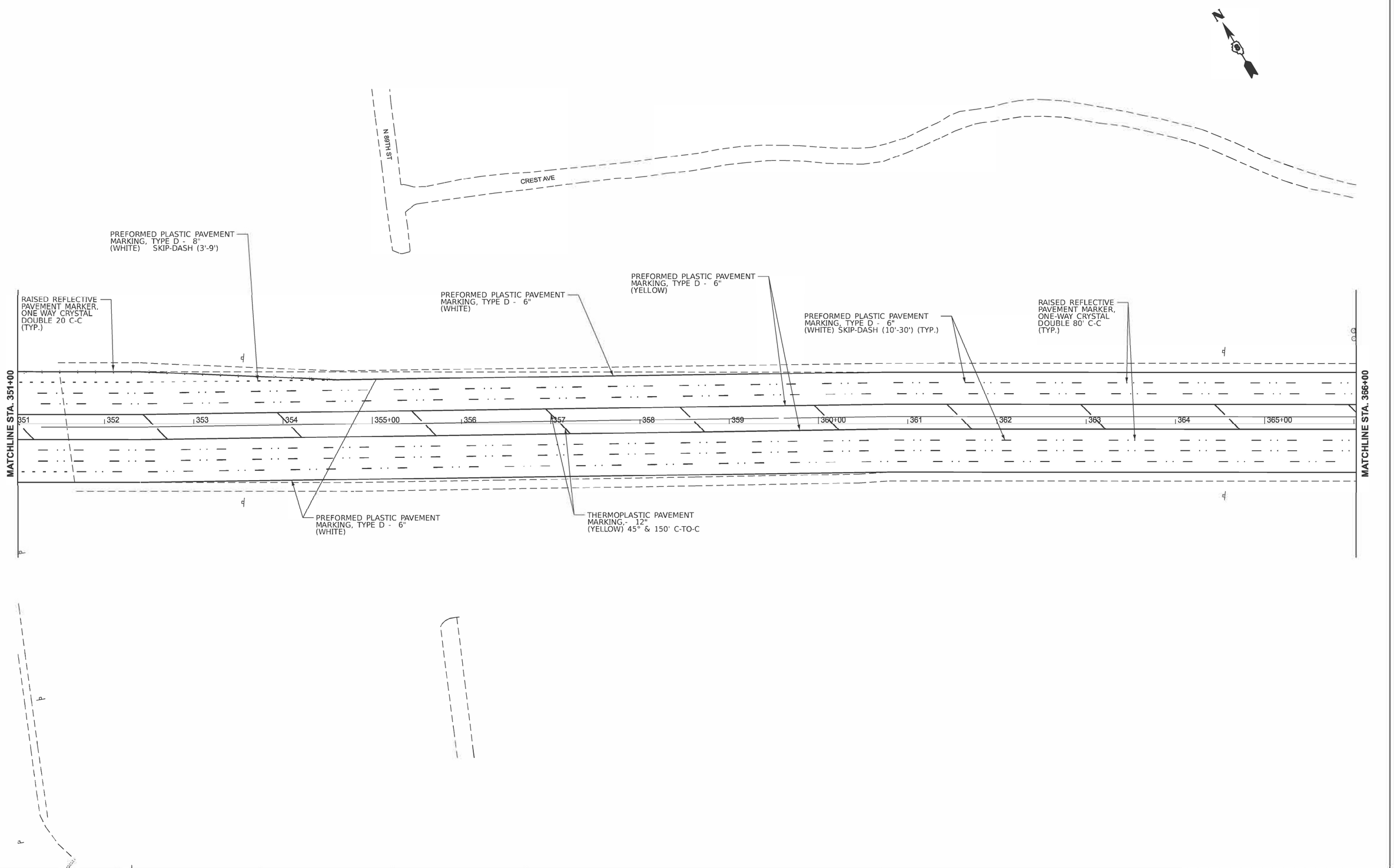

MODEL: EX64 - Plan 2 [Sheet]
FILE NAME: pw://dot.pw.bentley.com:PWIDOT/Documents/IDOT Offices/District 8/ORD Projects/d376R99/CADdata/CADsheets/D376R99-sht-plan.dgn

USER NAME = Kevin.Lewis	DESIGNED -	REVISED -
	DRAWN -	REVISED -
PLOT SCALE = $SCALE$	CHECKED -	REVISED -
PLOT DATE = 2/7/2025	DATE -	REVISED -

STATE OF ILLINOIS
DEPARTMENT OF TRANSPORTATION

PAVEMENT MARKING PLANS

SCALE | SHEET 2 OF 24 SHEETS STA. TO STA.

F.A.I. RTE.	SECTION	COUNTY	TOTAL SHEETS	SHEET NO.
64	82-(4,5,6, 7)-1RS-2	ST CLAIR	388	158
		CONTRACT NO. 76R99		
	ILLINOIS FED. AID PROJECT			

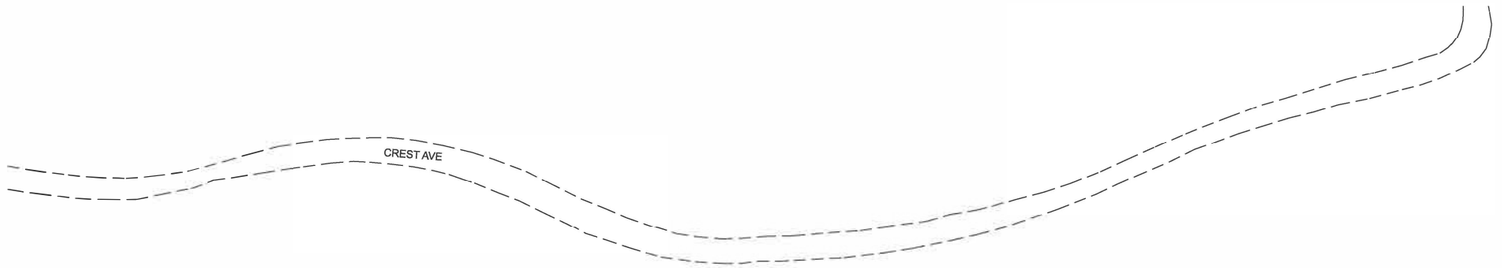

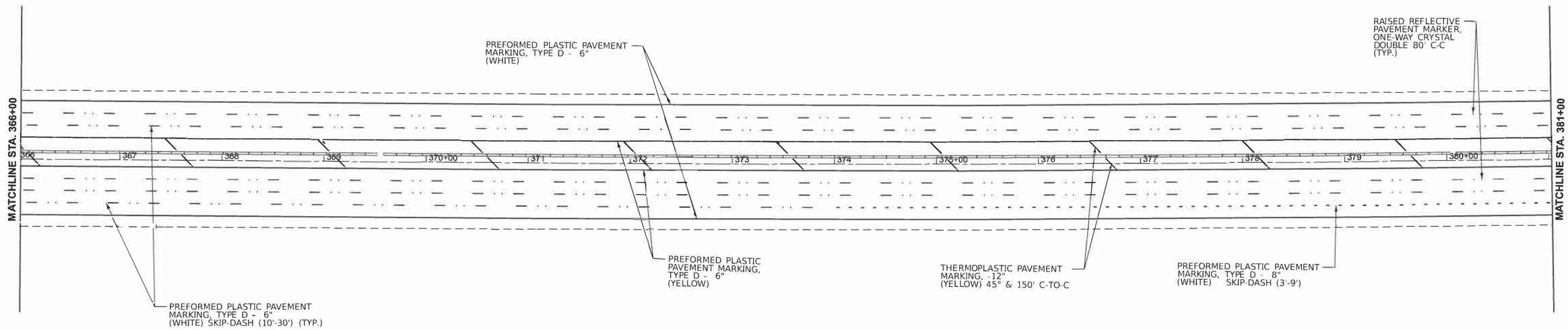

MODEL: EX64 - Plan 3 [Sheet]
FILE NAME: pw:///dot-pw.bentley.com:PWIDOT/Documents/IDOT Offices/District 8/ORD Projects/D876R99/CADData/CADsheets/D8 76R99-sht-plan.dgn

USER NAME = Kevin.Lewis	DESIGNED -	REVISED -	
	DRAWN -	REVISED -	
PLOT SCALE = $SCALE$	CHECKED -	REVISED -	
PLOT DATE = 2/7/2025	DATE -	REVISED -	

STATE OF ILLINOIS
DEPARTMENT OF TRANSPORTATION

PAVEMENT MARKING PLANS

SCALE: | SHEET 3 OF 24 SHEETS | STA. | TO STA.

F.A.I. RTE.	SECTION	COUNTY	TOTAL SHEETS	SHEET NO.
64	82-(4,5,6,7)-1RS-2	ST. CLAIR	388	159
		CONTRACT NO. 76R99		
	ILLINOIS FED. AID PROJECT			

N

PREFORMED PLASTIC PAVEMENT MARKING, TYPE D - 6" (WHITE) SKIP-DASH (10'-30') (TYP.)

PREFORMED PLASTIC PAVEMENT MARKING, TYPE D - 6" (WHITE)

MATCHLINE STA. 381+00

381 382 383 384 385+00 386 387 388 389 390+00 391 392 393 394 395+00

MATCHLINE STA. 396+00

THERMOPLASTIC PAVEMENT MARKING, -12" (YELLOW) 45° & 150' C-TO-C

PREFORMED PLASTIC PAVEMENT MARKING, TYPE D - 6" (YELLOW)

SIGN

PREFORMED PLASTIC PAVEMENT MARKING, TYPE D - 8" (WHITE) SKIP-DASH (3'-9')

RAISED REFLECTIVE PAVEMENT MARKER, ONE-WAY CRYSTAL DOUBLE 80' C-C (TYP.)

THERMOPLASTIC PAVEMENT MARKING LANE DROP ARROW SYMBOL (WHITE)

KASSING DR

MODEL: EX64 - Plan 4 [Sheet]
FILE NAME: pw:///dot.pw.bentley.com:PWIDOTDocuments/IDOT Offices/District 8/ORD Projects/D876R99/CADData/CADSheets/D876R99-sht-plan.dgn

USER NAME = Kevin.Lewis	DESIGNED -	REVISED -	
	DRAWN -	REVISED -	
PLOT SCALE = $$SCALE$	CHECKED -	REVISED -	
PLOT DATE = 2/7/2025	DATE -	REVISED -	

STATE OF ILLINOIS
DEPARTMENT OF TRANSPORTATION

PAVEMENT MARKING PLANS

SCALE: | SHEET 4 OF 24 SHEETS | STA. | TO STA.

F.A.I. RTE.	SECTION	COUNTY	TOTAL SHEETS	SHEET NO.
64	82-(4,5,6,7)-1RS-2	ST. CLAIR	388	160
		CONTRACT NO. 76R99		
	ILLINOIS FED. AID PROJECT			

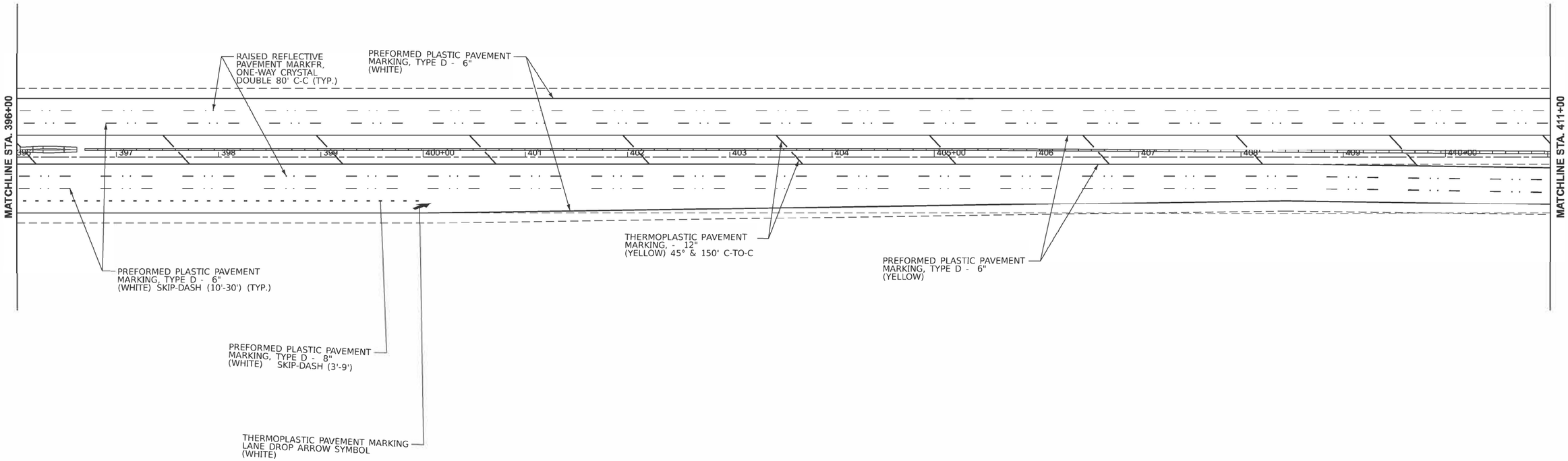

MODEL: EX64 - Plan 5 [Sheet]
FILE NAME: pw://ilcd.pw.bentley.com:PWIDOTDocuments\IDOT Offices\District 8\ORD Projects\D876R99\CAD\Data\CADsheets\D8T6R99-sht-plan.dgn

USER NAME = Kevin.Lewis	DESIGNED -	REVISED -	
	DRAWN -	REVISED -	
PLOT SCALE = $SCALE$	CHECKED -	REVISED -	
PLOT DATE = 2/7/2025	DATE -	REVISED -	

STATE OF ILLINOIS
DEPARTMENT OF TRANSPORTATION

PAVEMENT MARKING PLANS

SCALE: | SHEET 5 OF 24 SHEETS | STA. | TO STA.

F.A.I. RTE.	SECTION	COUNTY	TOTAL SHEETS	SHEET NO.
64	82-(4,5,6,7)-1RS-2	ST. CLAIR	388	161
		CONTRACT NO. 76R99		
	ILLINOIS FED. AID PROJECT			

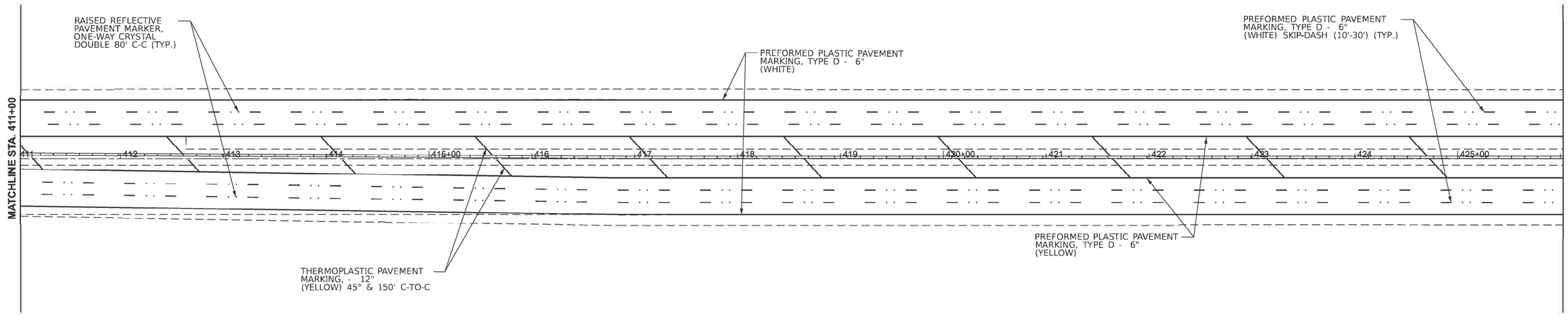

MODEL: EX64 - Plan 6 [Sheet]
FILE NAME: //ss/dot-pw.bentley.com:PWIDOT/Documents/IDOT Offices/District 8/CRD Projects/D876R99/CADData/CADsheets/D8T6R99-ant-plan.dgn

USER NAME = Kevin.Lewis	DESIGNED -	REVISED -	
	DRAWN -	REVISED -	
PLOT SCALE = $SCALE$	CHECKED -	REVISED -	
PLOT DATE = 2/7/2025	DATE -	REVISED -	

STATE OF ILLINOIS
DEPARTMENT OF TRANSPORTATION

PAVEMENT MARKING PLANS

SCALE: | SHEET 6 OF 24 SHEETS | STA. | TO STA.

F.A.I. RTE.	SECTION	COUNTY	TOTAL SHEETS	SHEET NO.
64	82-(4,5,6,7)-1RS-2	ST. CLAIR	388	162
		CONTRACT NO. 76R99		
	ILLINOIS FED. AID PROJECT			

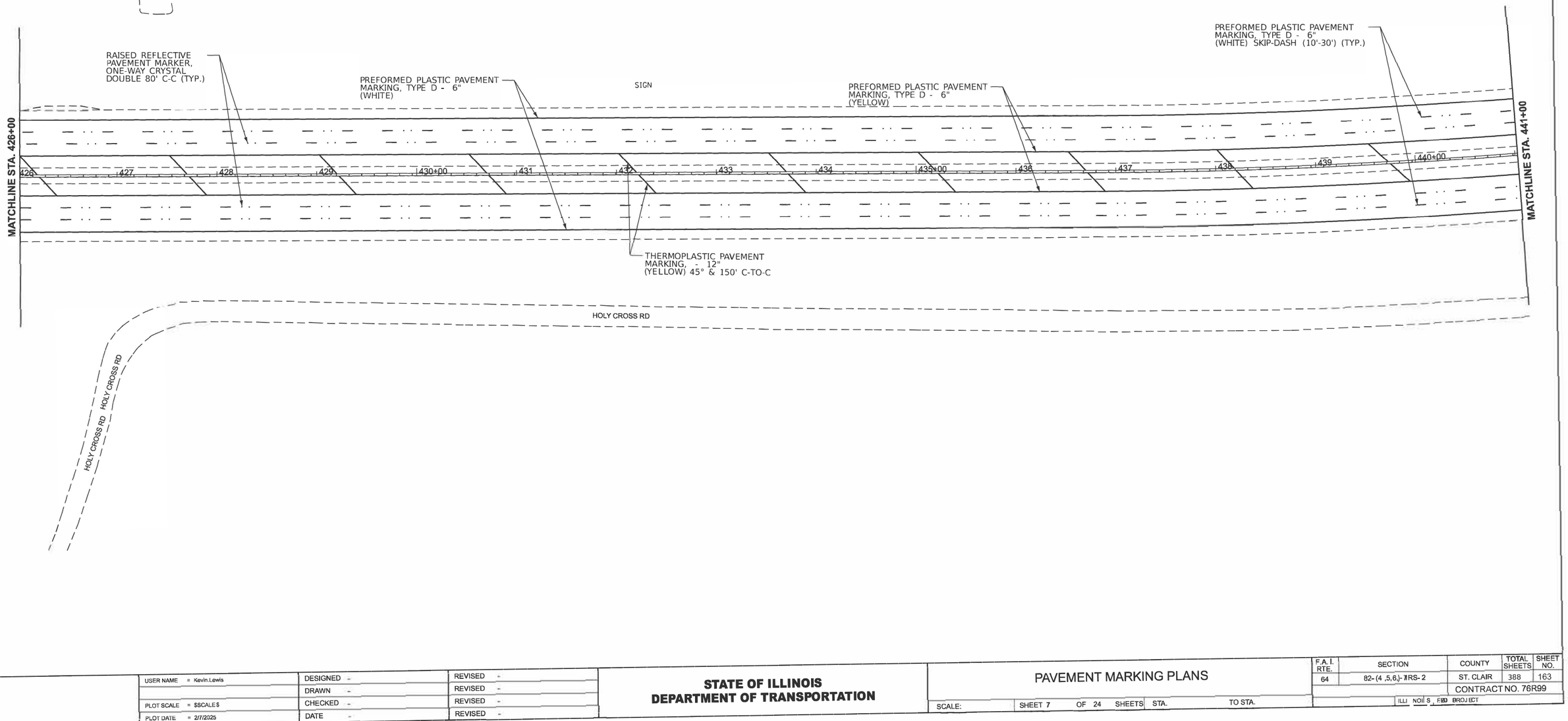

USER NAME = Kevin.Lewis	DESIGNED -	REVISED -	**STATE OF ILLINOIS**
	DRAWN -	REVISED -	**DEPARTMENT OF TRANSPORTATION**
PLOT SCALE = $SCALE$	CHECKED -	REVISED -	PAVEMENT MARKING PLANS
PLOT DATE = 2/7/2025	DATE -	REVISED -	SCALE: SHEET 7 OF 24 SHEETS STA. TO STA.

F.A.I. RTE.	SECTION	COUNTY	TOTAL SHEETS	SHEET NO.
64	82-(4,5,6)-7RS-2	ST. CLAIR	388	163
		CONTRACT NO. 76R99		
	ILLINOIS FED. PROJECT			

MODEL: EXI64 - Plan 7 [Sheet]
FILE NAME: pw:\\bdot-pw.bentley.com:PWBDOT\Documents\DOT Offices\District 8\ORD Projects\D8768R99\CADData\CADSheets\D8768R99-sht-plan.dgn

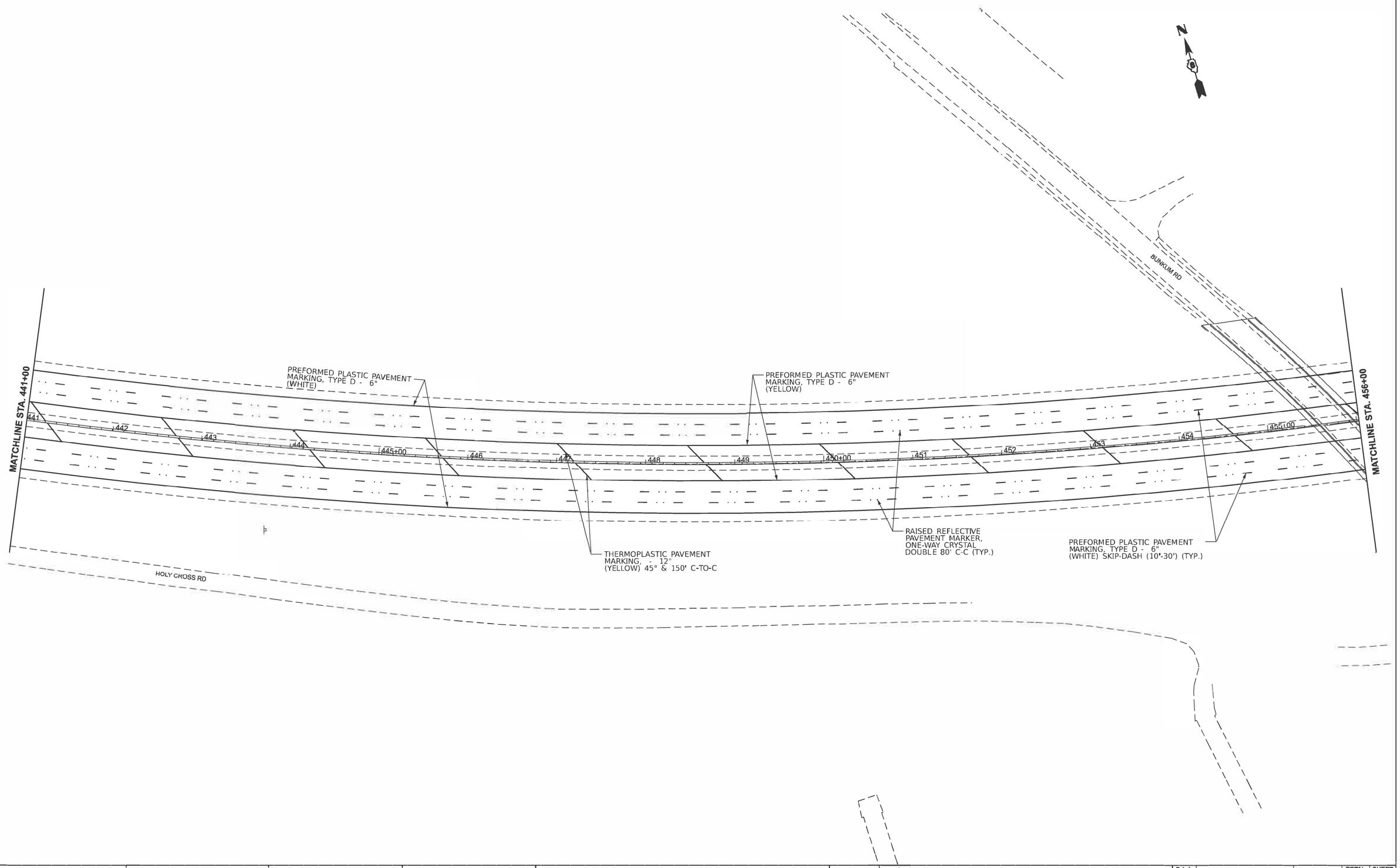

MODEL: EX64 - Plan 8 [Sheet]
FILE NAME: pw:///dot.pw.bentley.com:PWIDOT/Documents/IDOT Offices/District 8/ORD Projects/D8FRR99/CADdata/CADsheets/D8FRR99-sht-plan.dgn

USER NAME = Kevin.Lewis	DESIGNED -	REVISED -	
	DRAWN -	REVISED -	
PLOT SCALE = $SCALE$	CHECKED -	REVISED -	
PLOT DATE = 2/7/2025	DATE -	REVISED -	

STATE OF ILLINOIS
DEPARTMENT OF TRANSPORTATION

PAVEMENT MARKING PLANS

SCALE: | SHEET 8 OF 24 SHEETS | STA. | TO STA.

F.A.I. RTE	SECTION	COUNTY	TOTAL SHEETS	SHEET NO.
64	82-(4,5&7)-1RS-2	R	388	164
		CONTRACT NO. 76R99		
	ILLINOIS FED. AID PROJ.			

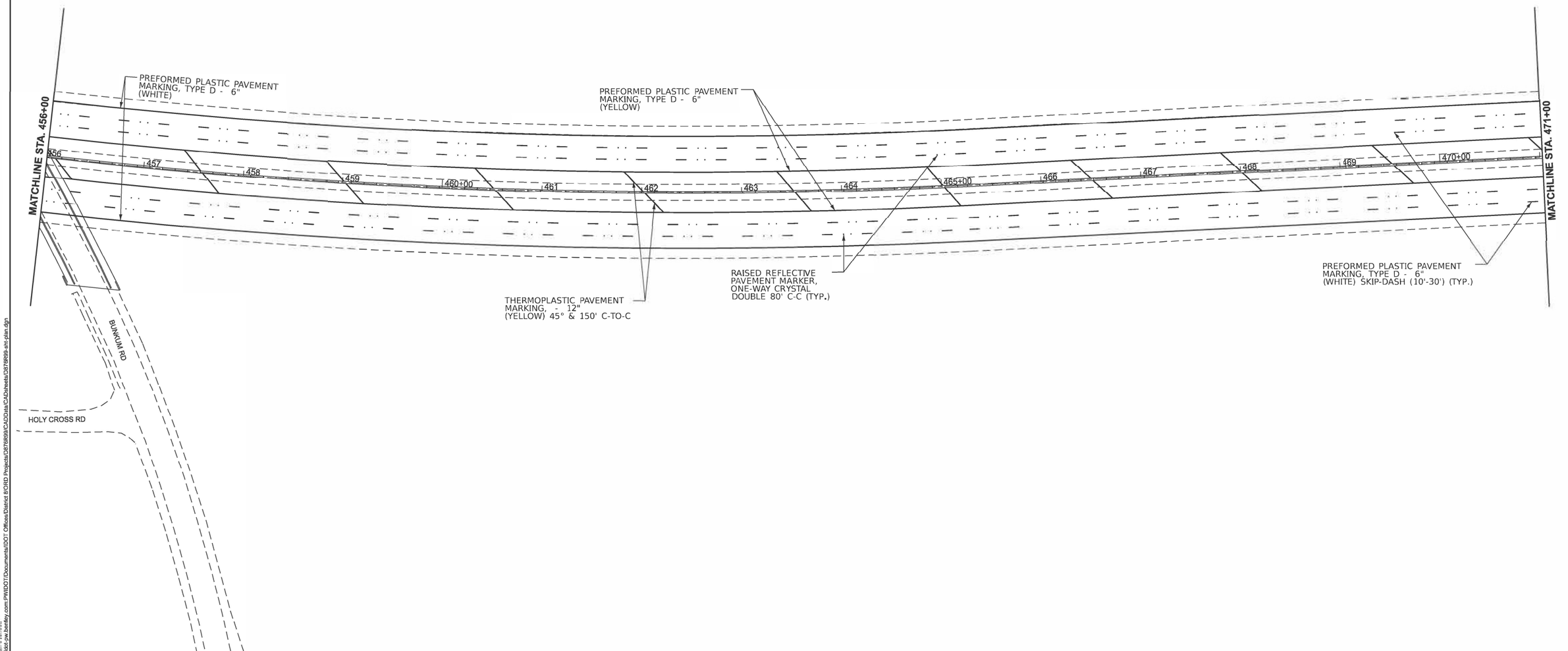

USER NAME = Ke iv Bowl s	DESIGNED -	REVISED -
	DRAWN -	REVISED -
PLOT SCALE = $SCALE$	CHECKED -	REVISED -
PLOT DATE = 2/7/2025	DATE -	REVISED -

STATE OF ILLINOIS
DEPARTMENT OF TRANSPORTATION

PAVEMENT MARKING PLANS

SCALE: | SHEET 9 OF 24 SHEETS | STA. | TO STA.

F.A.I. RTE.	SECTION	COUNTY	TOTAL SHEETS	SHEET NO.
64	82-(4,5,6, 7)-1RS-2	ST. CLAIR	388	165
		CONTRACTNO. 76R99		
	ILLINOIS FED. AID PROJECT			

MODEL: EXist - Plan 9 [Sheet]
FILE NAME: pw://dot-pw.bentley.com:PWIDOT/Documents/IDOT Offices/District 8/ORD Projects/D8768R99/CADData/CADsheets/D8768R99-sht-plan.dgn

N

MATCHLINE STA. 471+00

MATCHLINE STA. 486+00

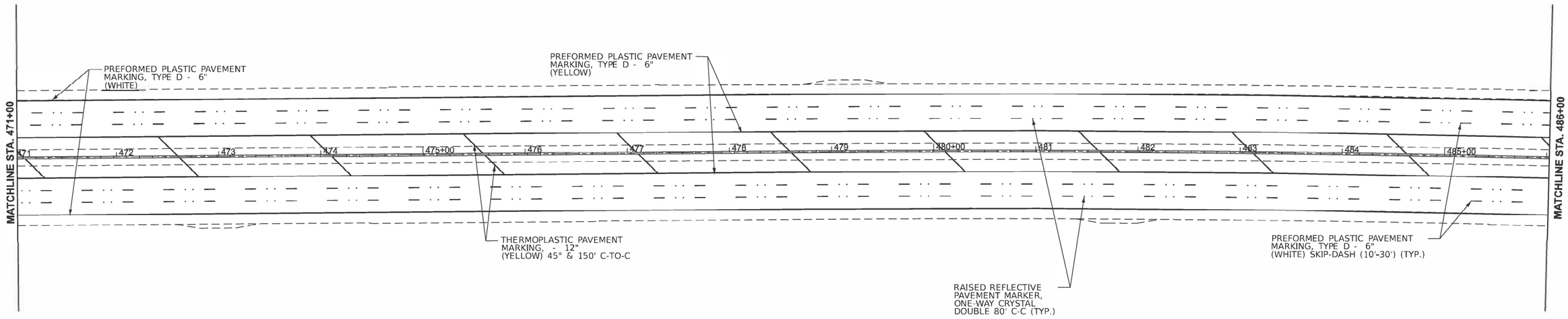

MODEL: EX84 - Plan 10 [Sheet]
FILE NAME: pw://ildot.pw.bentley.com:PWIDOT/Documents/IDOT Offices/District 8/ORD Projects/D8TRR99/CADData/CADsheets/D8TRR99-strt-plan.dgn

USER NAME = Kevin.Lewis	DESIGNED -	REVISED -	
	DRAWN -	REVISED -	
PLOT SCALE = $SCALE$	CHECKED -	REVISED -	
PLOT DATE = 2/7/2025	DATE -	REVISED -	

STATE OF ILLINOIS
DEPARTMENT OF TRANSPORTATION

PAVEMENT MARKING PLANS

SCALE: | SHEET 10 OF 24 SHEETS | STA. | TO STA.

F.A.I. RTE.	SECTION	COUNTY	TOTAL SHEETS	SHEET NO.
64	82-(4,5,6,7)-1RS-2	ST. CLAIR	388	166
		CONTRACT NO. 76R99		
	ILLINOIS FED. AID PROJECT			

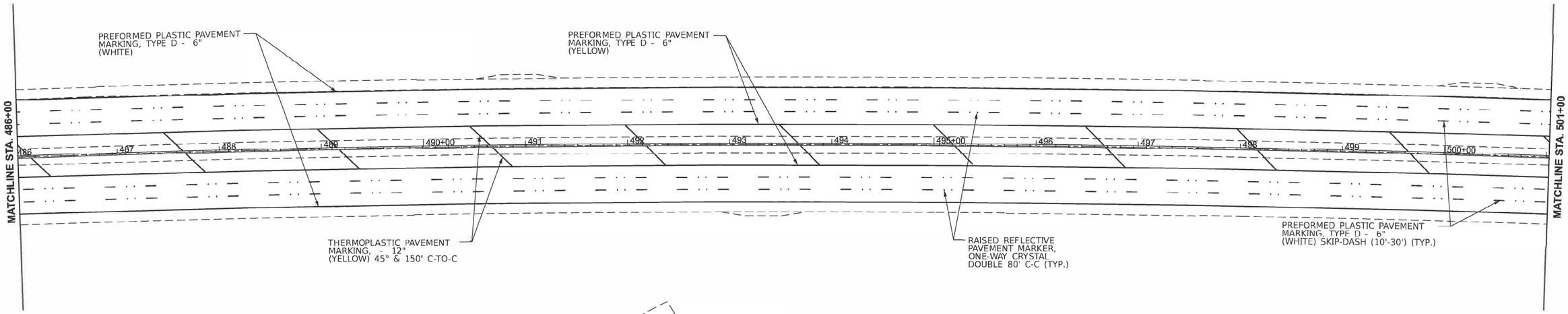

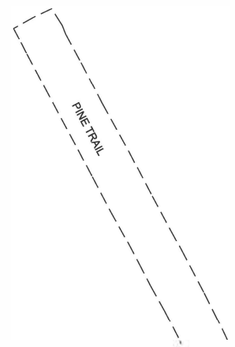

MODEL: EX64 - Plan 11 [Sheet]
FILE NAME: //w/ilsdot-pw.bentley.com:PWIDOT/Documents/IDOT Offices/District 8/CRD Projects/Dist76R99/CADData/CADSheets/D876R99-ant-plan.dgn

USER NAME = Kevin.Lewis	DESIGNED -	REVISED -	
	DRAWN -	REVISED -	
PLOT SCALE = $SCALE$	CHECKED -	REVISED -	
PLOT DATE = 2/7/2025	DATE -	REVISED -	

STATE OF ILLINOIS
DEPARTMENT OF TRANSPORTATION

PAVEMENT MARKING PLANS

SCALE: | SHEET 11 OF 24 SHEETS | STA. | TO STA.

F.A.I. RTE.	SECTION	COUNTY	TOTAL SHEETS	SHEET NO.
64	82-(4,5,6,7)-1RS-2	ST. CLAIR	388	167
		CONTRACT NO. 76R99		
	ILLINOIS FED. AID PROJECT			

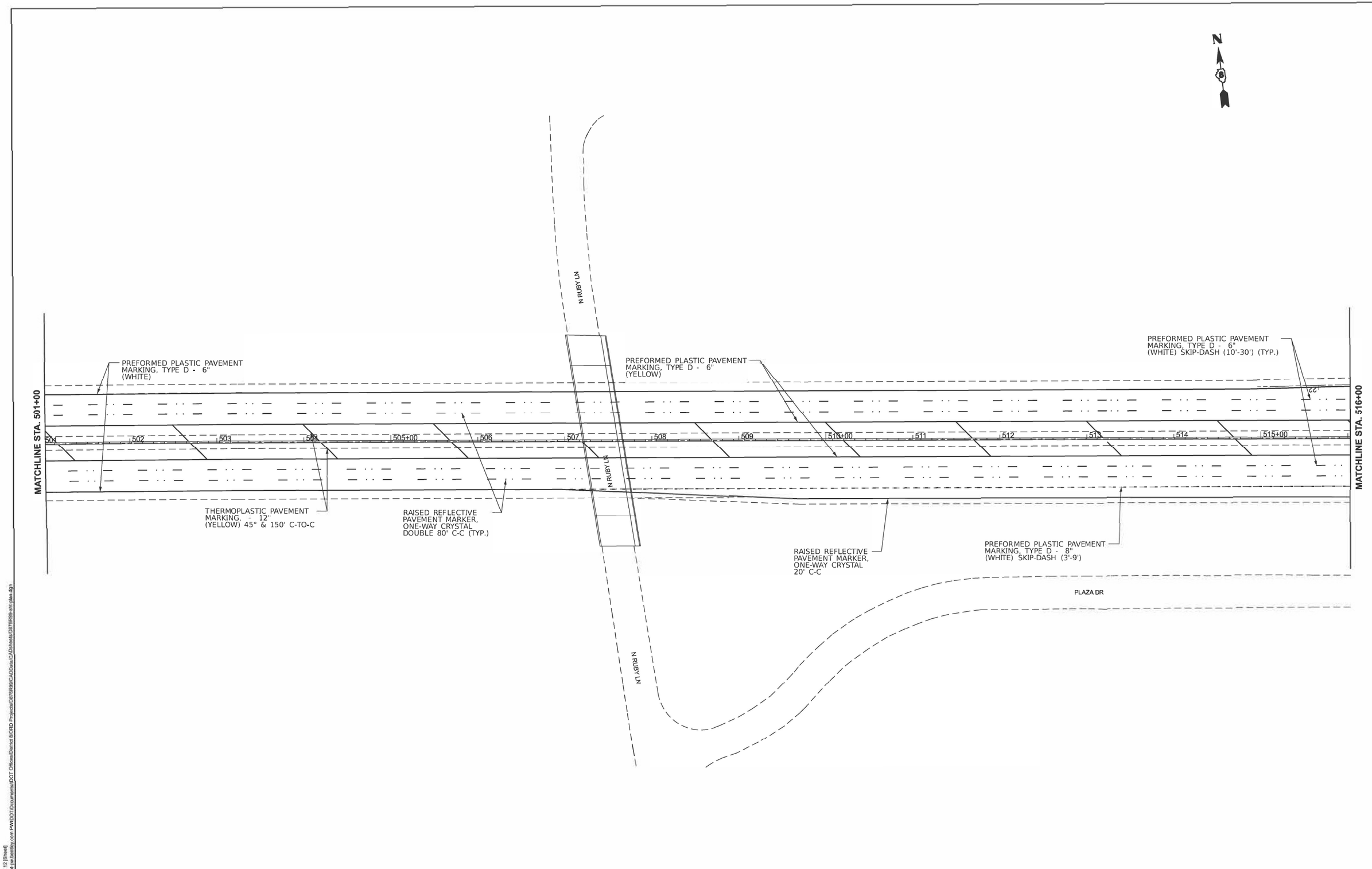

MODEL: EX64 - Plan 12 [Sheet]
FILE NAME: pw://idot.pw.bentley.com:PWIDOT/Documents/IDOT Offices/District 8/ORD Projects/D876R99/CADData/CADsheets/D876R99-sht-plan.dgn

USER NAME = Kevin.Lewis	DESIGNED -	REVISED -	
	DRAWN -	REVISED -	
PLOT SCALE = $SCALE$	CHECKED -	REVISED -	
PLOT DATE = 2/7/2025	DATE -	REVISED -	

STATE OF ILLINOIS
DEPARTMENT OF TRANSPORTATION

PAVEMENT MARKING PLANS

SCALE | SHEET 12 OF 24 SHEETS | STA. | TO STA.

F.A.I. RTE.	SECTION	COUNTY	TOTAL SHEETS	SHEET NO.
64	82-(4,5,6, 7)-1RS-2	ST. CLAIR	388	168

CONTRACT NO. 76R99

ILLINOIS BAD PROJECT

N

PREFORMED PLASTIC PAVEMENT MARKING, TYPE D - 6" (WHITE)

PREFORMED PLASTIC PAVEMENT MARKING, TYPE D - 6" (YELLOW)

PREFORMED PLASTIC PAVEMENT MARKING, TYPE D - 8" (WHITE) SKIP-DASH (3'-9') (TYP.)

PREFORMED PLASTIC PAVEMENT MARKING, TYPE D - 8" (WHITE)

8" STA. 527+00 6"

PREFORMED PLASTIC PAVEMENT MARKING, TYPE D - 6" (WHITE)

PREFORMED PLASTIC PAVEMENT MARKING, TYPE D - 6" (YELLOW)

THERMOPLASTIC PAVEMENT MARKING, - 12" (YELLOW) 45° & 150' C-TO-C

STA. 524+50
END 8" MARKING

STA. 527+00
END 8" MARKING

PREFORMED PLASTIC PAVEMENT MARKING, TYPE D - 6" (WHITE) SKIP-DASH (10'-30') (TYP.)

MATCHLINE STA. 516+00

MATCHLINE STA. 531+00

STA. 526+00
END 8" MARKING

RAISED REFLECTIVE PAVEMENT MARKER, ONE-WAY CRYSTAL DOUBLE 80' C-C (TYP.)

PREFORMED PLASTIC PAVEMENT MARKING, TYPE D - 8" (WHITE) SKIP-DASH (3'-9') (TYP.)

STA. 522+10
END 8" MARKING

RAISED REFLECTIVE PAVEMENT MARKER, ONE-WAY CRYSTAL 20' C C (TYP.)

8" STA. 526+00 6"

PREFORMED PLASTIC PAVEMENT MARKING, TYPE D - 6" (WHITE)

PREFORMED PLASTIC PAVEMENT MARKING, TYPE D - 6" (YELLOW)

PLAZA DR

RAISED REFLECTIVE PAVEMENT MARKER, ONE-WAY CRYSTAL 40' C-C (TYP.)

PLAZA DR

PREFORMED PLASTIC PAVEMENT MARKING, TYPE D - 8" (WHITE)

COMMERCE LN

PREFORMED PLAST
MARKING, TYPE D
(WHITE)

MODEL: EX64 - Plan 13 [Sheet]
FILE NAME: pw://dot.pw.bentley.com:PWEDOT/Documents/IDOT Offices/District 8/ORD Projects/D8TR99/CAD/Data/CADsheets/D8TR99-ant-plan.dgn

USER NAME = Kevin.Lewis	DESIGNED -	REVISED -	
	DRAWN -	REVISED -	
PLOT SCALE = $SCALE$	CHECKED -	REVISED -	
PLOT DATE = 2/7/2025	DATE -	REVISED -	

STATE OF ILLINOIS
DEPARTMENT OF TRANSPORTATION

PAVEMENT MARKING PLANS

SCALE: | SHEET 13 OF 24 SHEETS | STA. | TO STA.

F.A.I. RTE.	SECTION	COUNTY	TOTAL SHEETS	SHEET NO.
64	82-(4,5,6,7)-1RS-2	ST. CLAIR	388	200
		CONTRACT NO. 76R99		
	ILLINOIS	FED. AID PROJECT		

PR
189

PREFORMED PLASTIC PAVEMENT MARKING, TYPE D - 6" (WHITE)

PREFORMED PLASTIC PAVEMENT MARKING, TYPE D - 6" (YELLOW)

IL 159

PREFORMED PLASTIC PAVEMENT MARKING, TYPE D - 6" (WHITE)

PREFORMED PLASTIC PAVEMENT MARKING, TYPE D - 6" (YELLOW)

THERMOPLASTIC PAVEMENT MARKING, LETTERS AND SYMBOL (WHITE)

N

PREFORMED PLASTIC PAVEMENT MARKING, TYPE D - 6" (YELLOW)

PREFORMED PLASTIC PAVEMENT MARKING, TYPE D - 8" (WHITE) SKIP-DASH (3'-9')

PREFORMED PLASTIC PAVEMENT MARKING, TYPE D - 6" (WHITE)

IL 159

IL 159

8" STA. 539+50 6"

PREFORMED PLASTIC PAVEMENT MARKING, TYPE D - 8" (WHITE)

PREFORMED PLASTIC PAVEMENT MARKING, TYPE D - 6" (YELLOW)

PREFORMED PLASTIC PAVEMENT MARKING, TYPE D - 6" (WHITE)

STA. 537+70
END 8" MARKING

STA. 540+00
END 8" MARKING

RAISED REFLECTIVE PAVEMENT MARKER, ONE-WAY CRYSTAL DOUBLE 80' C-C (TYP.)

MATCHLINE STA. 531+00

MATCHLINE STA. 546+00

STA. 535+00
END 8" MARKING

THERMOPLASTIC PAVEMENT MARKING, - 12" (YELLOW) 45° & 150' C-TO-C

6" STA. 535+00 8"

STA. 539+00
END 8" MARKING

PREFORMED PLASTIC PAVEMENT MARKING, TYPE D - 8" (WHITE) SKIP-DASH (3'-9')

PREFORMED PLASTIC PAVEMENT MARKING, TYPE D - 6" (WHITE) SKIP-DASH (10'-30') (TYP.)

THERMOPLASTIC PAVEMENT MARKING, - 12" (YELLOW) 45° & 150' C-TO-C

PREFORMED PLASTIC PAVEMENT MARKING, TYPE D - 6" (YELLOW)

PREFORMED PLASTIC PAVEMENT MARKING, TYPE D - 8" (WHITE)

PREFORMED PLASTIC PAVEMENT MARKING, TYPE D - 6" (WHITE)

PREFORMED PLASTIC PAVEMENT MARKING, TYPE D - 6" (WHITE)

PREFORMED PLASTIC PAVEMENT MARKING, TYPE D - 6" (YELLOW)

IC PAVEMENT - 6"

EFORMED PLASTIC PAVEMENT

IL 159

IL 159

PREFORMED PLASTIC PAVEMENT MARKING, TYPE D - 6" (WHITE)

MODEL: EXH - Plan 14 [Sheet]
FILE NAME: pw://fdot-pw.bentley.com:PWDOT/Documents/DOT Offices/District 3/ORD Projects/D87ER99/CADData/CADSheets/D87ER99-alt-plan.dgn

USER NAME = Kevin.Lewis	DESIGNED -	REVISED -	
	DRAWN -	REVISED -	
PLOT SCALE = $$SCALE$	CHECKED -	REVISED -	
PLOT DATE = 2/7/2025	DATE -	REVISED -	

STATE OF ILLINOIS
DEPARTMENT OF TRANSPORTATION

PAVEMENT MARKING PLANS

SCALE: | SHEET 14 OF 24 SHEETS | STA. | TO STA.

F.A. I. RTE.	SECTION	COUNTY	TOTAL SHEETS	SHEET NO.
64	82-(4,5,6,7)-1RS-2	ST. CLAIR	388	170 201
		CONTRACT NO. 76R99		
	ILLINOIS FED. AID PROJECT			

N

EXECUTIVE DR

SALEM PLACE

SALEM PL

RAISED REFLECTIVE PAVEMENT MARKER, ONE-WAY CRYSTAL 20' C-C (TYP.)

PREFORMED PLASTIC PAVEMENT MARKING, TYPE D - 8" (WHITE)

STA. 549+00

STA. 552+30
END 8" MARKING

PREFORMED PLASTIC PAVEMENT MARKING, TYPE D - 8" (WHITE) SKIP-DASH (3'-9')

PREFORMED PLASTIC PAVEMENT MARKING, TYPE D - 6" (YELLOW)

RAISED REFLECTIVE PAVEMENT MARKER, ONE-WAY CRYSTAL DOUBLE 80' C-C (TYP.)

MATCHLINE STA. 546+00

MATCHLINE STA. 561+00

STA. 546+86

STA. 547+36
START 8" MARKING

PREFORMED PLASTIC PAVEMENT MARKING, TYPE D - 8" (WHITE)

STA. 548+60
END 8" MARKING

THERMOPLASTIC PAVEMENT MARKING, - 12" (YELLOW) 45° & 150' C-TO-C

PREFORMED PLASTIC PAVEMENT MARKING, TYPE D - 8" (WHITE) SKIP-DASH (3'-9')

PREFORMED PLASTIC PAVEMENT MARKING, TYPE D - 6" (WHITE)

PREFORMED PLASTIC PAVEMENT MARKING, TYPE D - 6" (WHITE) SKIP-DASH (10'-30') (TYP.)

PLAZA DR

MODEL: EX64 - Plan 15 [Sheet]
FILE NAME: pw://idoc.pw.bentley.com:PW1DOT/Documents/IDOT Offices/District 8/ORD Projects/D8776R99/CADData/CADsheets/D8776R99-anr-plan.dgn

USER NAME = Kevin.Lewis	DESIGNED -	REVISED -	
	DRAWN -	REVISED -	
PLOT SCALE = $SCALES	CHECKED -	REVISED -	
PLOT DATE = 2/7/2025	DATE -	REVISED -	

STATE OF ILLINOIS
DEPARTMENT OF TRANSPORTATION

PAVEMENT MARKING PLANS

SCALE | SHEET 15 OF 24 SHEETS | STA. | TO STA.

F.A.I. RTE.	SECTION	COUNTY	TOTAL SHEETS	SHEET NO.
64	82-(4,5,6, 7)-RS-2	ST. CLAIR	388	171
		CONTRACT NO. 76R99		
	ILLINOIS FED. AID PROJECT			

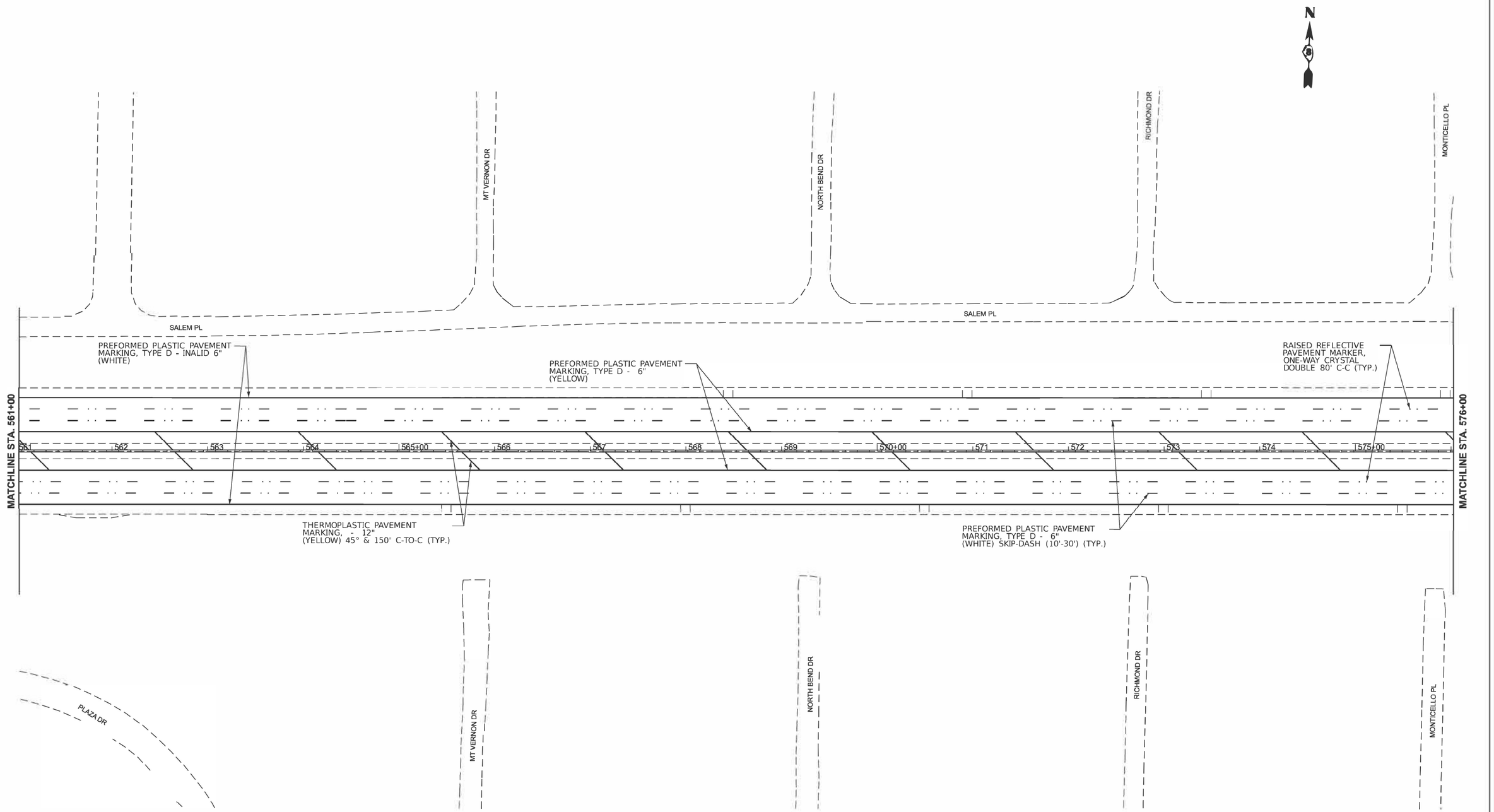

MODEL: EX64 - Plan 16 [Sheet]
FILE NAME: pw://ilodc.pw.bentley.com:PWIDOT/Documents/IDOT Offices/District 8/ORD Projects/D8TR99/CAD/Data/CADsheets/D8TR99-ant-plan.dgn

USER NAME = Kevin.Lewis	DESIGNED -	REVISED -	
	DRAWN -	REVISED -	
PLOT SCALE = $SCALE$	CHECKED -	REVISED -	
PLOT DATE = 2/7/2025	DATE -	REVISED -	

STATE OF ILLINOIS
DEPARTMENT OF TRANSPORTATION

PAVEMENT MARKING PLANS

SCALE: | SHEET 16 OF 24 SHEETS | STA. | TO STA.

F.A.I. RTE.	SECTION	COUNTY	TOTAL SHEETS	SHEET NO.
64	82-(4,5,6,7)-1RS-2	ST. CLAIR	388	172
		CONTRACT NO. 76R99		
	ILLINOIS FED. AID PROJECT			

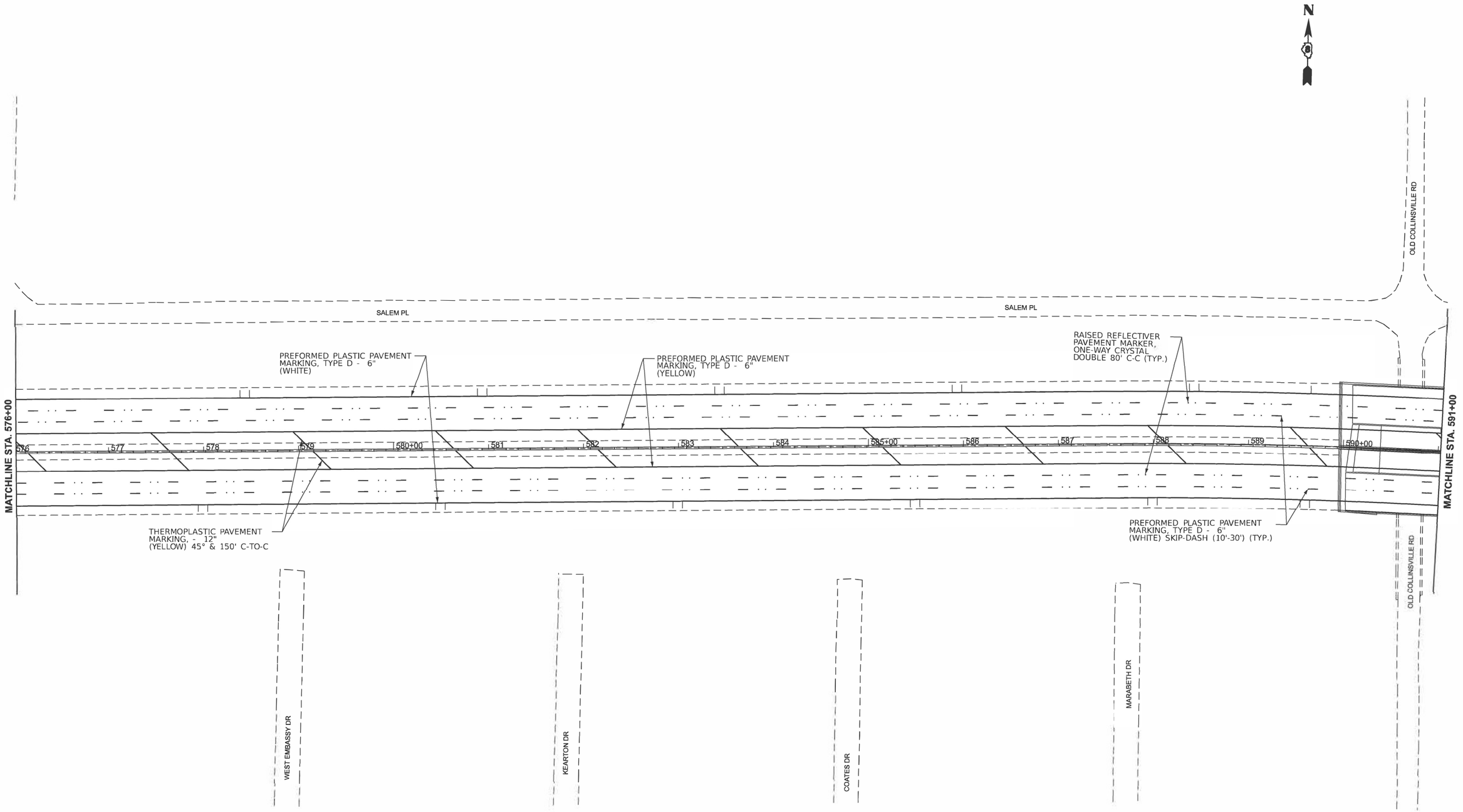

MODEL: EX84 - Plan 1? [Sheet]
FILE NAME: pw://ildot-pw.bentley.com:PWIDOT/Documents/IDOT Offices/District 8/ORD Projects/D876R99/CADData/CADsheets/D876R99-sht-plan.dgn

USER NAME = Kevin.Lewis	DESIGNED -	REVISED -	STATE OF ILLINOIS DEPARTMENT OF TRANSPORTATION
	DRAWN -	REVISED -	
PLOT SCALE = $SCALE$	CHECKED -	REVISED -	
PLOT DATE = 2/7/2025	DATE -	REVISED -	

PAVEMENT MARKING PLANS

SCALE: | SHEET 17 OF 24 SHEETS | STA. | TO STA.

F.A.I. RTE.	SECTION	COUNTY	TOTAL SHEET	SHEET NO.
64	82-(4,5,6,7)-1RS-2	ST. CLAIR	388	173
		CONTRACT NO. 76R99		
	ILLINOIS FED. AID PROJ. CLAIR		388	204

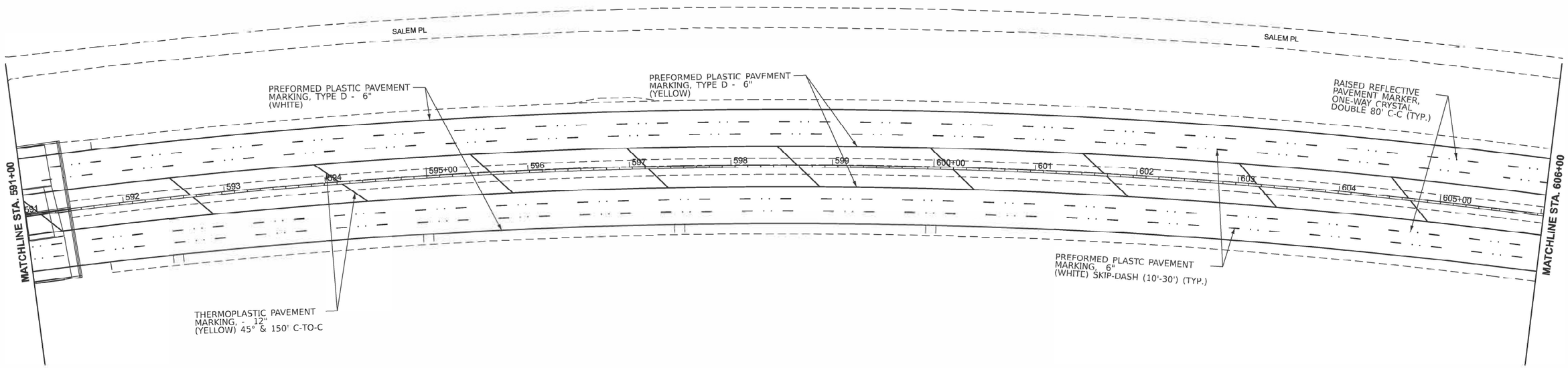

MODEL: EX64 - Plan 18 [Sheet]
FILE NAME: pw:\\dot.pw.bentley.com:PWIDOT\Documents\IDOT Offices\District 8\ORD Projects\D876R99\CADData\CADsheets\D876R99-ant-plan.dgn

USER NAME = Kev inLew s	DESIGNED -	REVISED -	
	DRAWN -	REVISED -	
PLOT SCALE = $SCALE$	CHECKED -	REVISED -	
PLOT DATE = 2/7/2025	DATE -	REVISED -	

STATE OF ILLINOIS
DEPARTMENT OF TRANSPORTATION

PAVEMENT MARKING PLANS

SCALE: | SHEET 18 OF 24 SHEETS | STA. | TO STA.

F.A. I. RTE.	SECTION	COUNTY	TOTAL SHEETS	SHEET
64	82-(4,5,6,7)-1RS-2	ST. CLAIR	388	174
		CONTRACT NO. 76R99		
	ILLINOIS	FED. AID PROJECT		

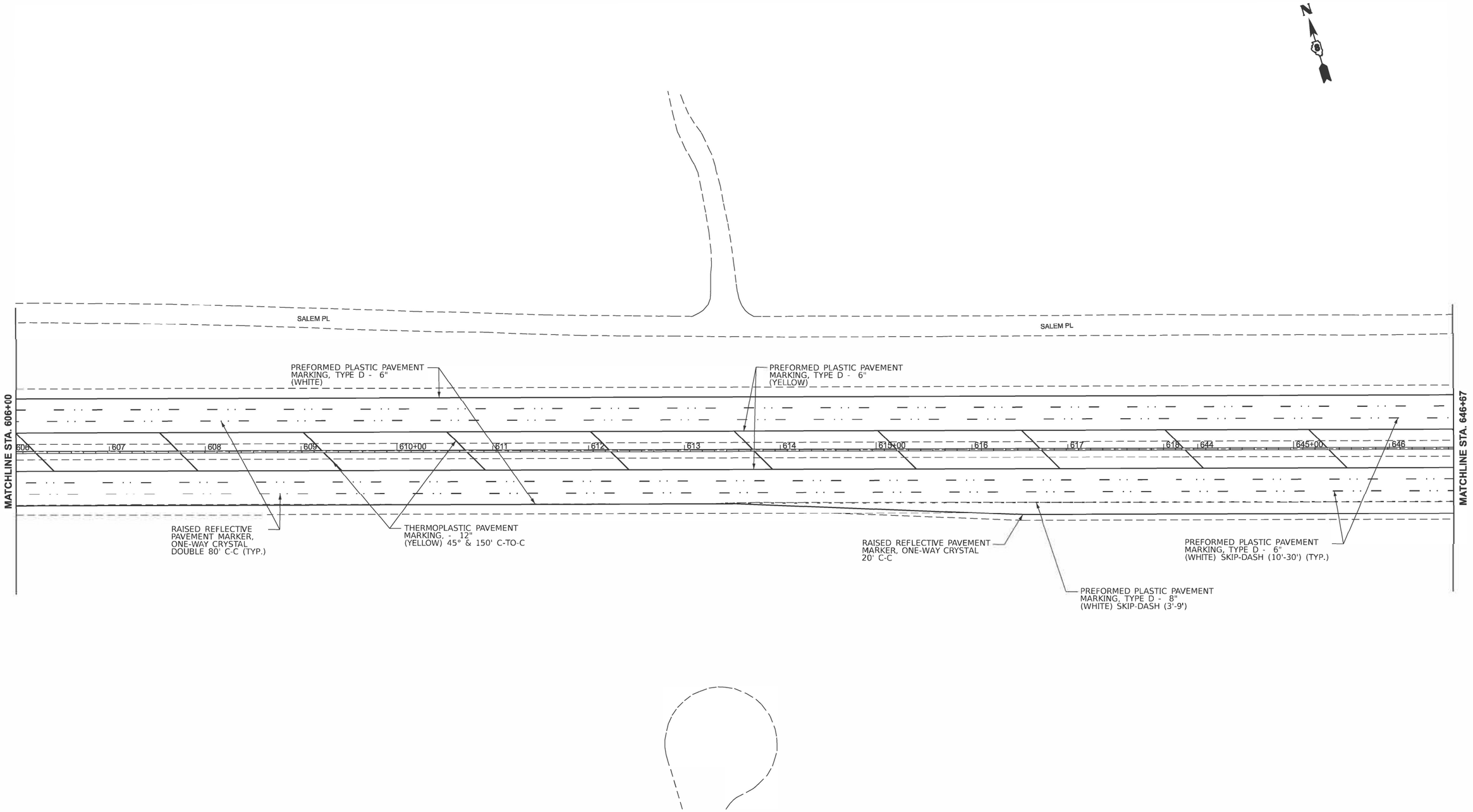

MODEL: - EX64 - Plan 19 [Sheet]
FILE NAME: pw://idot-pw.bentley.com:PWIDOT/Documents/IDOT Offices/District 8/ORD Projects/D876R99/CADData/CADsheets/D876R99-sht-plan.dgn

USER NAME = Kevin.Lewis	DESIGNED -	REVISED -	
	DRAWN -	REVISED -	
PLOT SCALE = $ SCALE$	CHECKED -	REVISED -	
PLOT DATE = 2/7/2025	DATE -	REVISED -	

STATE OF ILLINOIS
DEPARTMENT OF TRANSPORTATION

PAVEMENT MARKING PLANS

SCALE | SHEET 19 OF 24 SHEETS | STA. TO STA.

F.A.I. RTE.	SECTION	COUNTY	TOTAL SHEETS	SHEET NO.
64	82-(4,5,6, 7)1RS-2	ST. CLAIR	388	175
		CONTRACT NO. 76R99		
		ILLINOIS DAD PROJECT		

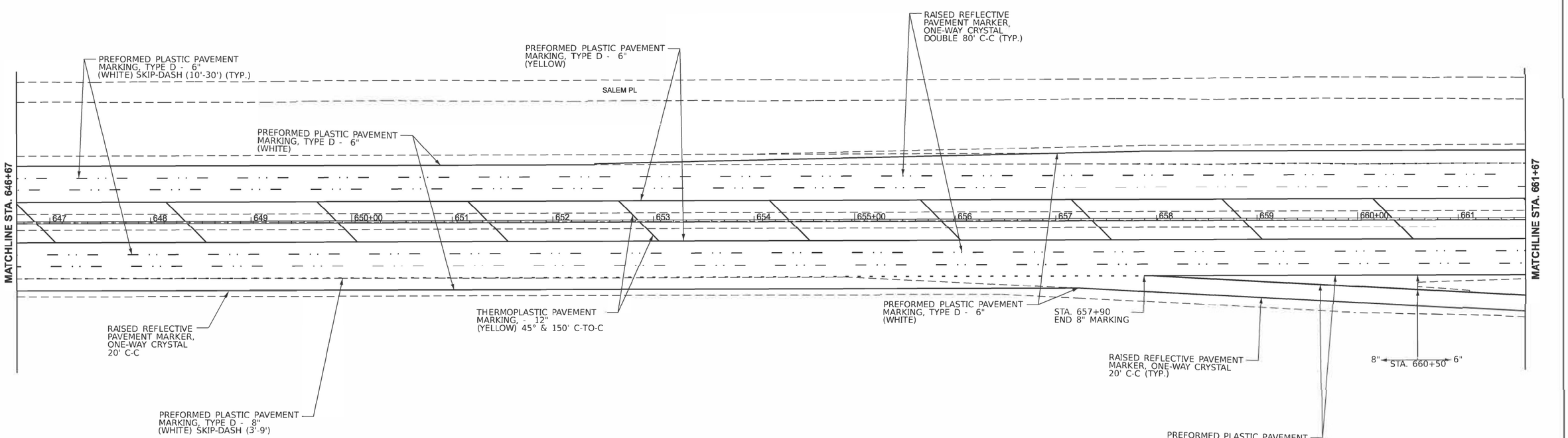

MODEL: EX64 - Plan 20 [Sheet]
FILE NAME: pw://dotpw.bentley.com:PWIDOT/Documents/IDOT Offices/District 8/GRD Projects/D876R99/CADData/CADsheets/D876R99-sht-plan.dgn

USER NAME = Kevin.Lewis	DESIGNED -	REVISED -
	DRAWN -	REVISED -
PLOT SCALE = $SCALE$	CHECKED -	REVISED -
PLOT DATE = 2/7/2025	DATE -	REVISED -

STATE OF ILLINOIS
DEPARTMENT OF TRANSPORTATION

PAVEMENT MARKING PLANS

SCALE: | SHEET 20 OF 24 SHEETS | STA. | TO STA.

F.A.I. RTE.	SECTION	COUNTY	TOTAL SHEETS	SHEET NO.
64	82-(4,5,6,7)-1RS-2	ST. CLAIR	388	
		CONTRACT NO. 76R99		
	ILLINOIS FED. AID PROJECT			

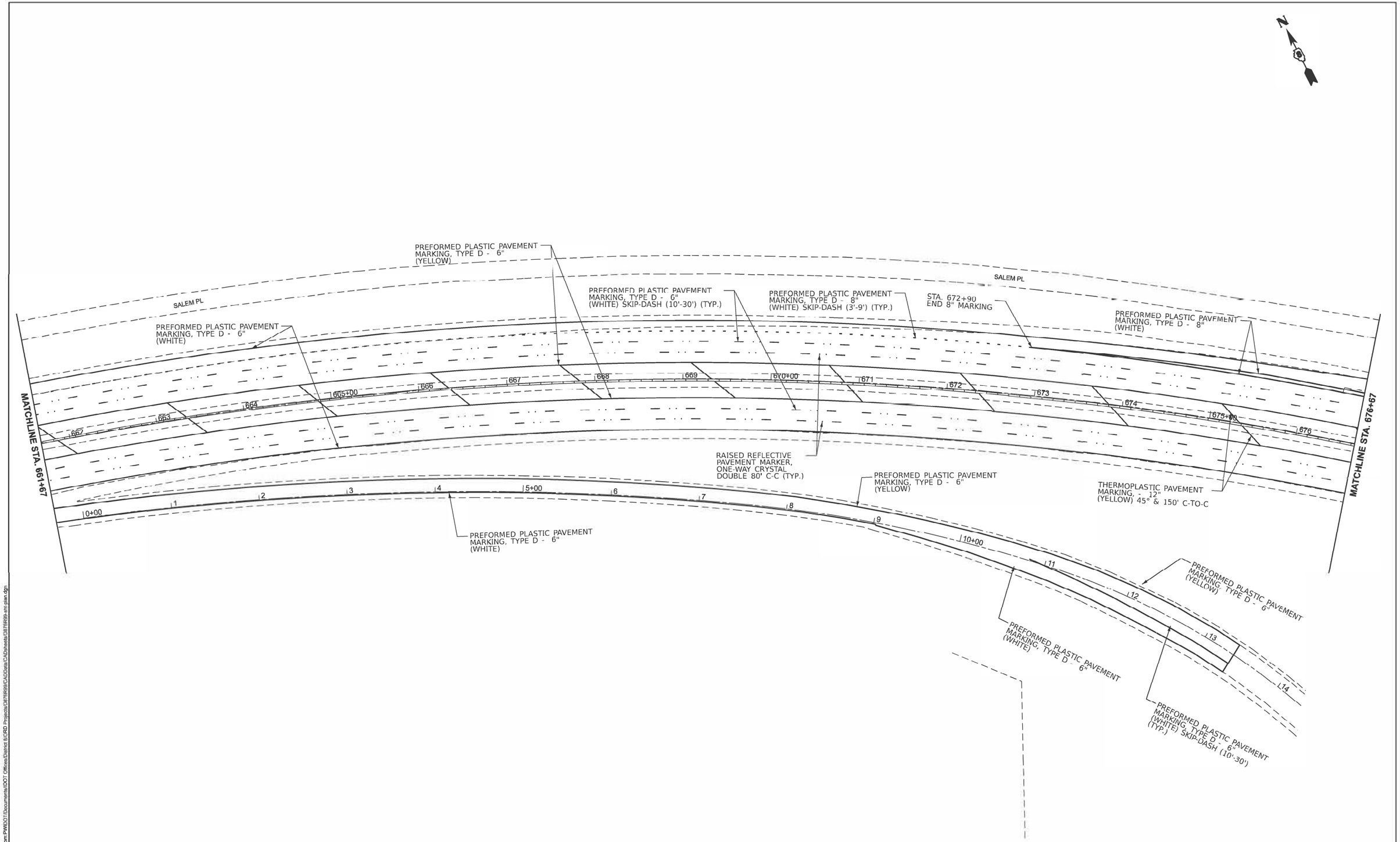

MODEL: EX84 - Plan 21 [Sheet]
FILE NAME: pw://ildot.pw.bentley.com:PWIDOT/Documents/IDOT Offices/District 8/ORD Projects/D8TRR99/CAD/Data/CADsheets/D8TRR99-anr-plan.dgn

USER NAME = Kevin.Lewis	DESIGNED -	REVISED -	
	DRAWN -	REVISED -	
PLOT SCALE = $SCALE$	CHECKED -	REVISED -	
PLOT DATE = 2/7/2025	DATE -	REVISED -	

STATE OF ILLINOIS
DEPARTMENT OF TRANSPORTATION

PAVEMENT MARKING PLANS

SCALE: | SHEET 21 OF 24 SHEETS | STA. | TO STA.

F.A.I. RTE.	SECTION	COUNTY	TOTAL SHEETS	SHEET NO.
64	82-(4,5,6,7)-1RS-2	ST. CLAIR	388	177
		CONTRACT NO. 76R99		
	ILLINOIS FED. AID PROJECT			

PREFORMED PLASTIC PAVEMENT MARKING, TYPE D - 6" (WHITE)

PREFORMED PLASTIC PAVEMENT MARKING, TYPE D - 6" (YELLOW)

SALEM PL

W HWY 50

8" STA. 679+20 6"

PREFORMED PLASTIC PAVEMENT MARKING, TYPE D - 8" (WHITE)

PREFORMED PLASTIC PAVEMENT MARKING, TYPE D - 6" (WHITE) SKIP-DASH (10'-30') (TYP.)

RAISED REFLECTIVE PAVEMENT MARKER, ONE-WAY CRYSTAL DOUBLE 80' C-C (TYP.)

PREFORMED PLASTIC PAVEMENT MARKING, TYPE D - 6" (YELLOW)

THERMOPLASTIC PAVEMENT MARKING, - 12" (YELLOW) 45° & 150' C-TO-C

PREFORMED PLASTIC PAVEMENT MARKING, TYPE D - 6" (WHITE)

MATCHLINE STA. 676+67

MATCHLINE STA. 691+67

PREFORMED PLASTIC PAVEMENT MARKING, TYPE D - 6" (YELLOW)

PREFORMED PLASTIC PAVEMENT MARKING, TYPE D - 6" (WHITE)

USER NAME = Kevin.Lewis	DESIGNED -	REVISED -	
	DRAWN -	REVISED -	
PLOT SCALE = $SCALE$	CHECKED -	REVISED -	
PLOT DATE = 2/7/2025	DATE -	REVISED -	

STATE OF ILLINOIS
DEPARTMENT OF TRANSPORTATION

PAVEMENT MARKING PLANS

SCALE | SHEET 22 OF 24 SHEETS STA. TO STA.

F.A.I. RTE.	SECTION	COUNTY	TOTAL SHEETS	SHEET NO.
64	82-(4,5,6,7)-1RS-2	ST.CLAIR	388	178
		CONTRACT NO. 76R99		
	ILLINOIS FAP PROJECT			

MODEL: EX64 - Plan 22 [Sheet]
FILE NAME: pw://ildot.pw.bentley.com:PWIDOT/Documents/IDOT Offices/District 8/ORD Projects/D876R99/CADData/CADsheets/D876R99-ant-plan.dgn

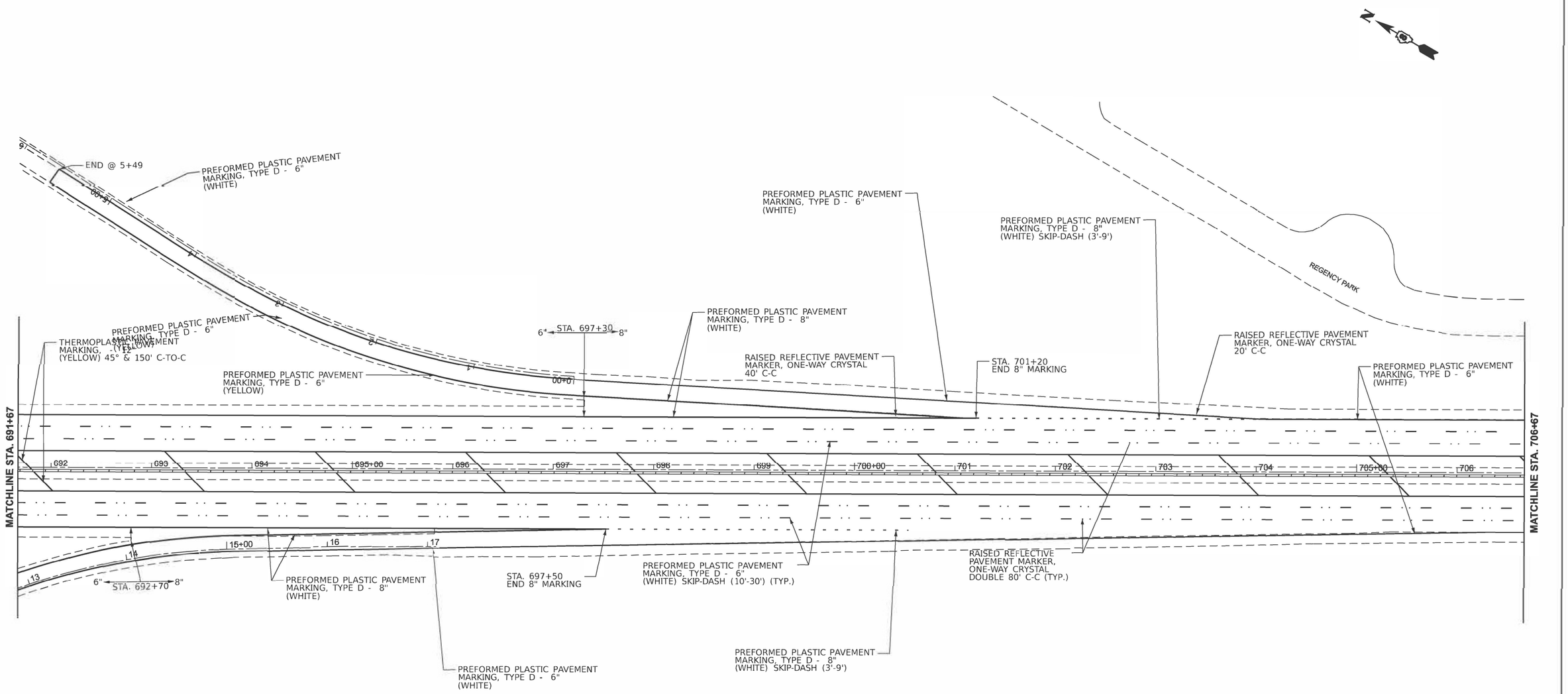

MODEL: EX64 - Plan 23 [Sheet]
FILE NAME: pw://idot-pw.bentley.com:PWIDOT/Documents/IDOT Offices/District 8/ORD Projects/D876R99/CADData/CADsheets/D876R99-sht-plan.dgn

USER NAME = Kevin.Lewis	DESIGNED -	REVISED -	
	DRAWN -	REVISED -	
PLOT SCALE = $SCALE$	CHECKED -	REVISED -	
PLOT DATE = 2/7/2025	DATE -	REVISED -	

STATE OF ILLINOIS
DEPARTMENT OF TRANSPORTATION

PAVEMENT MARKING PLANS

SCALE: | SHEET 23 OF 24 SHEETS | STA. | TO STA.

F.A.I. RTE.	SECTION	COUNTY	TOTAL SHEETS	SHEET NO.
64	82-(4,5,6,7)-1RS-2	ST. CLAIR	388	179
		CONTRACT NO. 76R99		
		ILLINOIS	FED. AID PROJECT	

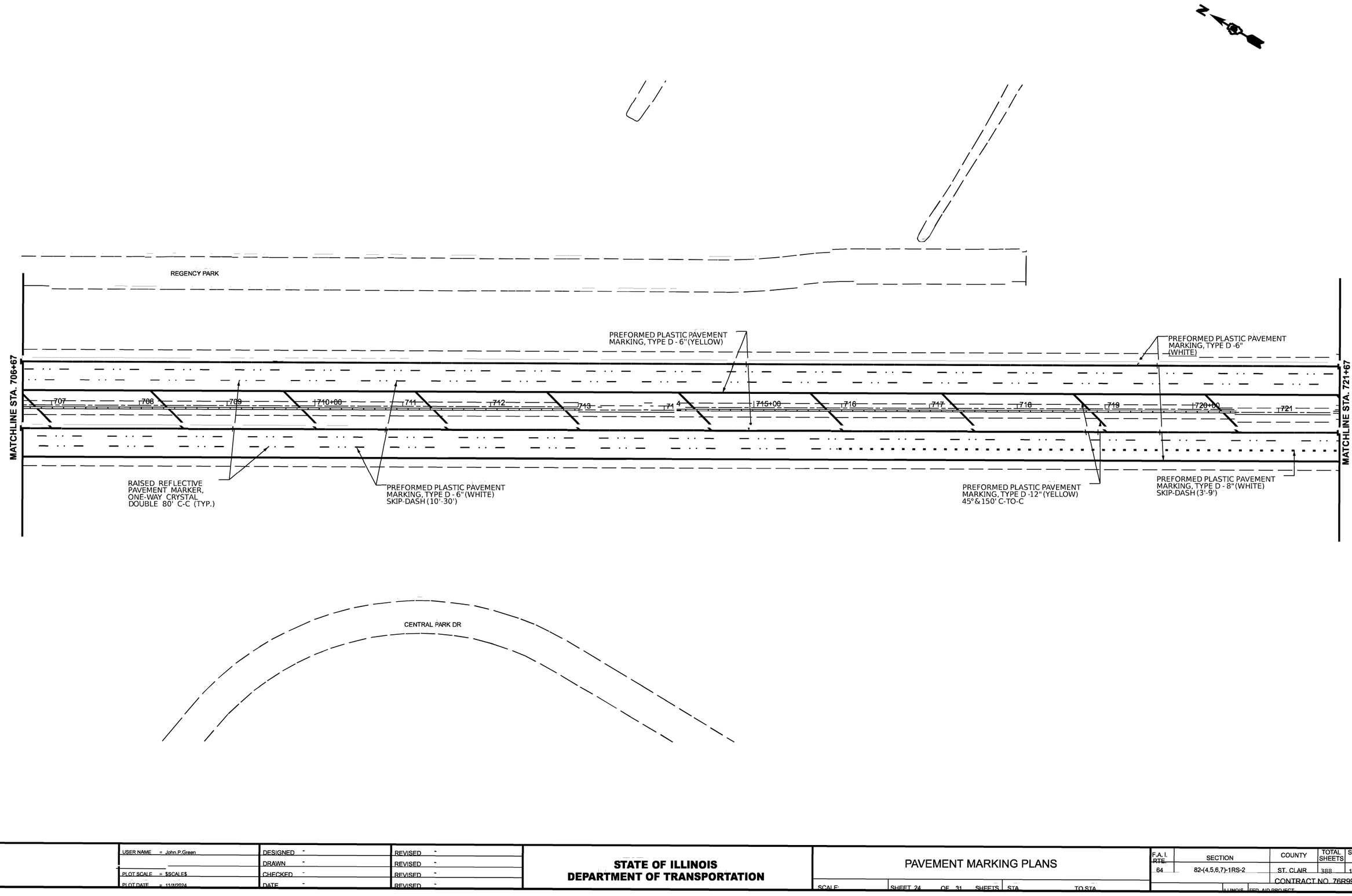

MODEL: EX64 - Plan 24 [Sheet]
FILE NAME: pw:\\dot-pw.bentley.com:PWIDOT\Documents\IDOT Officese\District 8\ORD Projects\D876R99\CADData\CADsheets\D8076R99-sht-plan.dgn

USER NAME = John.P.Green	DESIGNED -	REVISED -
	DRAWN -	REVISED -
PLOT SCALE = $SCALE$	CHECKED -	REVISED -
PLOT DATE = 11/7/2024	DATE -	REVISED -

STATE OF ILLINOIS
DEPARTMENT OF TRANSPORTATION

PAVEMENT MARKING PLANS

SCALE: | SHEET 24 OF 31 SHEETS | STA. | TO STA.

F.A.I. RTE.	SECTION	COUNTY	TOTAL SHEETS	SHEET NO.
64	82-(4,5,6,7)-1RS-2	ST. CLAIR	388	180

CONTRACT NO. 76R99

ILLINOIS FED. AID PROJECT

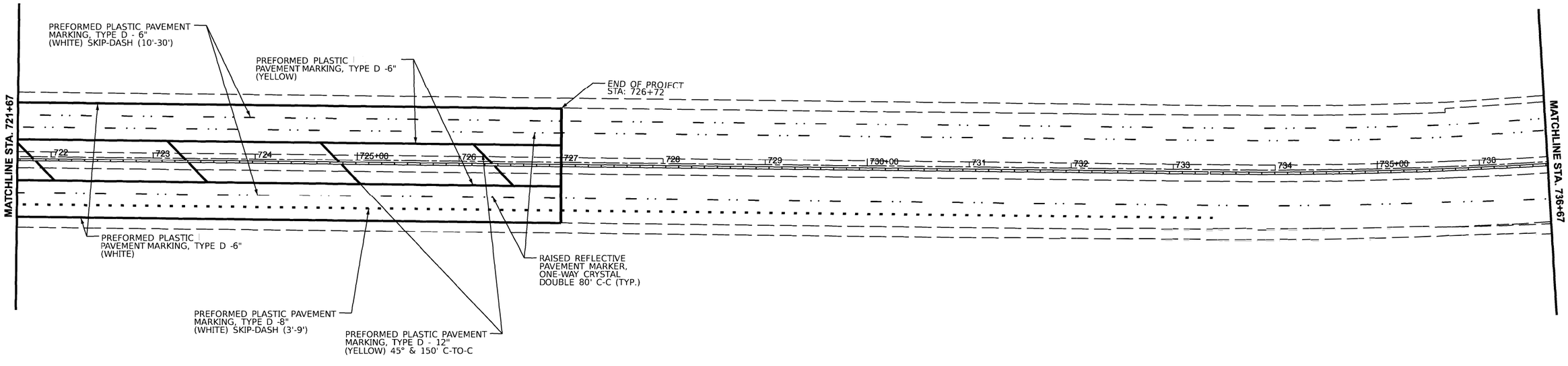

MODEL: EX64 - Plan 25 [Sheet]
FILE NAME: pw://idot.pwpeer.ey.com:PWIDOT/Documents/IDOT Offices/District 8/ORD Projects/D876R99/CADData/CADsheets/D876R99-sht-plan.dgn

USER NAME = John.P.Green	DESIGNED -	REVISED -	STATE OF ILLINOIS DEPARTMENT OF TRANSPORTATION
	DRAWN -	REVISED -	
PLOT SCALE = $SCALE$	CHECKED -	REVISED -	
PLOT DATE = 11/7/2024	DATE -	REVISED -	

PAVEMENT MARKING PLANS

SCALE: | SHEET 25 OF 31 SHEETS | STA. | TO STA.

F.A.I. RTE.	SECTION	COUNTY	TOTAL SHEETS	SHEET NO.
64	82-(4,5,6,7)-1RS-2	ST. CLAIR	388	181
		CONTRACT NO. 76R99		
		ILLINOIS	FED. AID PROJECT	

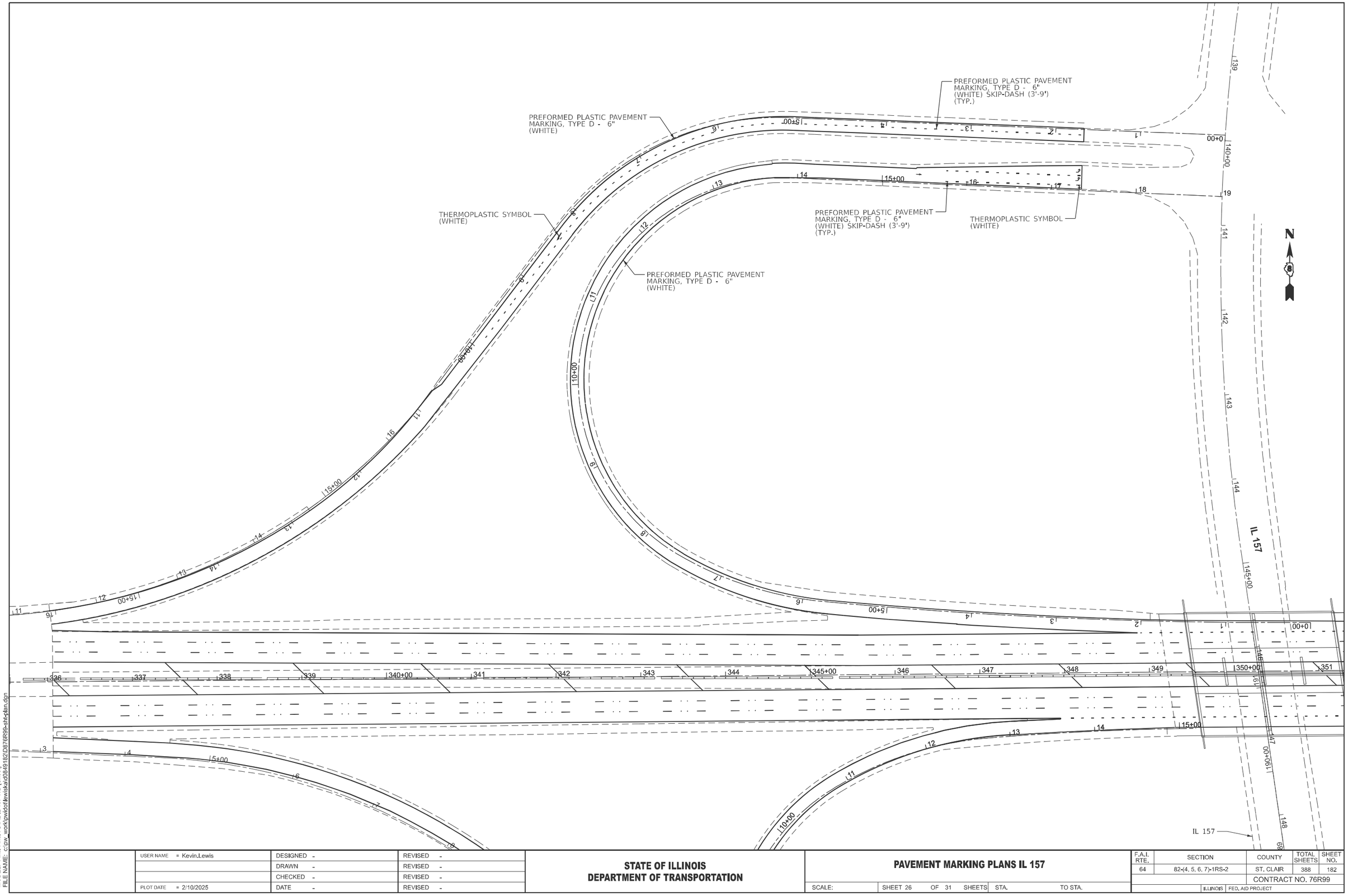

MODEL: Final Final FINAL IL 157 WB [Sheet]
FILE NAME: c:\pw_work\pwidot\lewiskad\d0849182\D876R99-sht-plan.dgn

USER NAME = Kevin.Lewis	DESIGNED -	REVISED -	
	DRAWN -	REVISED -	
	CHECKED -	REVISED -	
PLOT DATE = 2/10/2025	DATE -	REVISED -	

STATE OF ILLINOIS
DEPARTMENT OF TRANSPORTATION

PAVEMENT MARKING PLANS IL 157

SCALE: | SHEET 26 OF 31 SHEETS | STA. | TO STA.

F.A.I. RTE.	SECTION	COUNTY	TOTAL SHEETS	SHEET NO.
64	82-(4, 5, 6, 7)-1RS-2	ST. CLAIR	388	182
		CONTRACT NO. 76R99		
	ILLINOIS	FED. AID PROJECT		

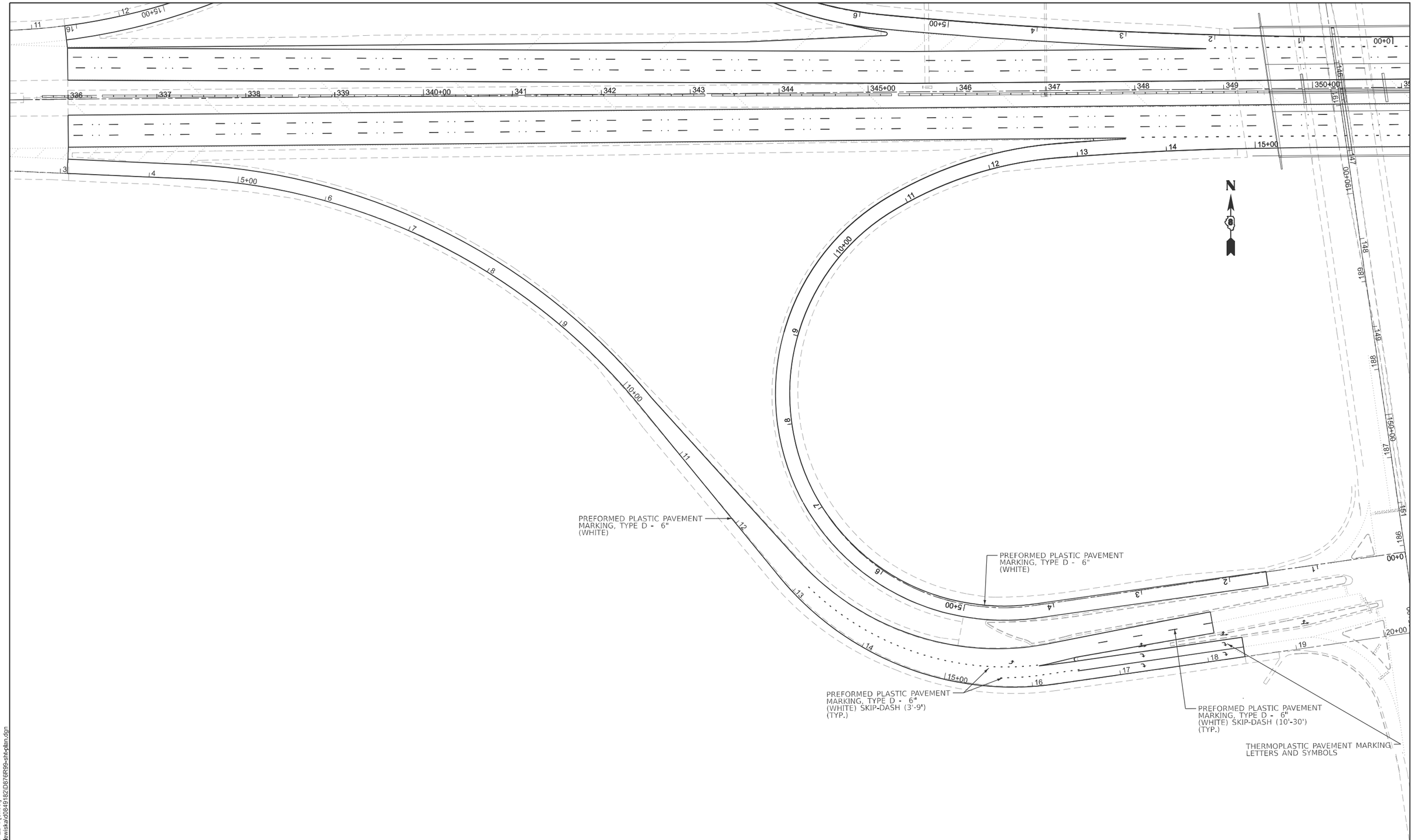

MODEL: Final Final FINAL IL 157 EB-1 [Sheet]
FILE NAME: c:\pw_work\pwidot\lewiska\d0849182\D876R99-sht-plan.dgn

USER NAME = Kevin.Lewis	DESIGNED -	REVISED -	
	DRAWN -	REVISED -	
	CHECKED -	REVISED -	
PLOT DATE = 2/10/2025	DATE -	REVISED -	

STATE OF ILLINOIS
DEPARTMENT OF TRANSPORTATION

PAVEMENT MARKING PLANS IL 157

SCALE: | SHEET 27 OF 31 SHEETS | STA. | TO STA.

F.A.I. RTE.	SECTION	COUNTY	TOTAL SHEETS	SHEET NO.
64	82-(4, 5, 6, 7)-1RS-2	ST. CLAIR	388	183
		CONTRACT NO. 76R99		
	ILLINOIS FED. AID PROJECT			

PREFORMED PLASTIC PAVEMENT MARKING, TYPE D - 6" (YELLOW)

PREFORMED PLASTIC PAVEMENT MARKING, TYPE D - 6" (WHITE)

PREFORMED PLASTIC PAVEMENT MARKING, TYPE D - 6" (WHITE)

PREFORMED PLASTIC PAVEMENT MARKING, TYPE D - 6" (WHITE) SKIP-DASH (3'-9") (TYP.)

PREFORMED PLASTIC PAVEMENT MARKING, TYPE D - 6" (WHITE)

LEFT TURN LANE SYMBOL THERMOPLASTIC PAVEMENT MARKING

PREFORMED PLASTIC PAVEMENT MARKING, TYPE D - 6" (WHITE) SKIP-DASH (10'-30") (TYP.)

RIGHT TURN LANE SYMBOL THERMOPLASTIC PAVEMENT MARKING

PREFORMED PLASTIC PAVEMENT MARKING, TYPE D - 6" (YELLOW)

PREFORMED PLASTIC PAVEMENT MARKING, TYPE D - 6" (WHITE)

IL 159

N

MODEL: IL EB RAMP 159 FINAL [Sheet]
FILE NAME: c:\pw_work\pwidot\lewiskad\d0849182\D876R99-sht-plan.dgn

USER NAME = Kevin.Lewis	DESIGNED -	REVISED -	
	DRAWN -	REVISED -	
	CHECKED -	REVISED -	
PLOT DATE = 2/10/2025	DATE -	REVISED -	

STATE OF ILLINOIS
DEPARTMENT OF TRANSPORTATION

PAVEMENT MARKING PLANS IL 159

SCALE: | SHEET 28 OF 31 SHEETS | STA. | TO STA.

F.A.I. RTE.	SECTION	COUNTY	TOTAL SHEETS	SHEET NO.
64	82-(4, 5, 6, 7)-1RS-2	ST. CLAIR	388	184
		CONTRACT NO. 76R99		
	ILLINOIS FED. AID PROJECT			

PREFORMED PLASTIC PAVEMENT MARKING, TYPE D - 6" (WHITE) SKIP-DASH (10'-30') (TYP.)

THERMOPLASTIC PAVEMENT MARKING LETTERS AND SYMBOLS

PREFORMED PLASTIC PAVEMENT MARKING, TYPE D - 6" (WHITE)

PREFORMED PLASTIC PAVEMENT MARKING, TYPE D - 6" (WHITE) SKIP-DASH (3'-9') (TYP.)

N

PREFORMED PLASTIC PAVEMENT MARKING, TYPE D - 6" (WHITE)

THERMOPLASTIC PAVEMENT MARKING LETTERS AND SYMBOLS

IL 159

THERMOPLASTIC PAVEMENT MARKING (WHITE)

PREFORMED PLASTIC PAVEMENT MARKING, TYPE D - 6" (WHITE)

IL 159

IL 159

PREFORMED PLASTIC PAVEMENT MARKING, TYPE D - 6" (YELLOW)

PREFORMED PLASTIC PAVEMENT MARKING, TYPE D - 6" (YELLOW)

PREFORMED PLASTIC PAVEMENT MARKING, TYPE D - 6" (YELLOW)

MODEL: IL 159 WB FINAL RAMP FINAL-2 [Sheet]
FILE NAME: c:\pw_work\pwidotlewiska\d0849182\D876R99-sht-plan.dgn

USER NAME = Kevin.Lewis	DESIGNED -	REVISED -	
	DRAWN -	REVISED -	
	CHECKED -	REVISED -	
PLOT DATE = 2/10/2025	DATE -	REVISED -	

STATE OF ILLINOIS
DEPARTMENT OF TRANSPORTATION

PAVEMENT MARKING PLANS IL 159

SCALE: | SHEET 29 OF 31 SHEETS | STA. | TO STA.

F.A.I. RTE.	SECTION	COUNTY	TOTAL SHEETS	SHEET NO.
64	82-(4, 5, 6, 7)-1RS-2	ST. CLAIR	388	185
		CONTRACT NO. 76R99		
	ILLINOIS FED. AID PROJECT			

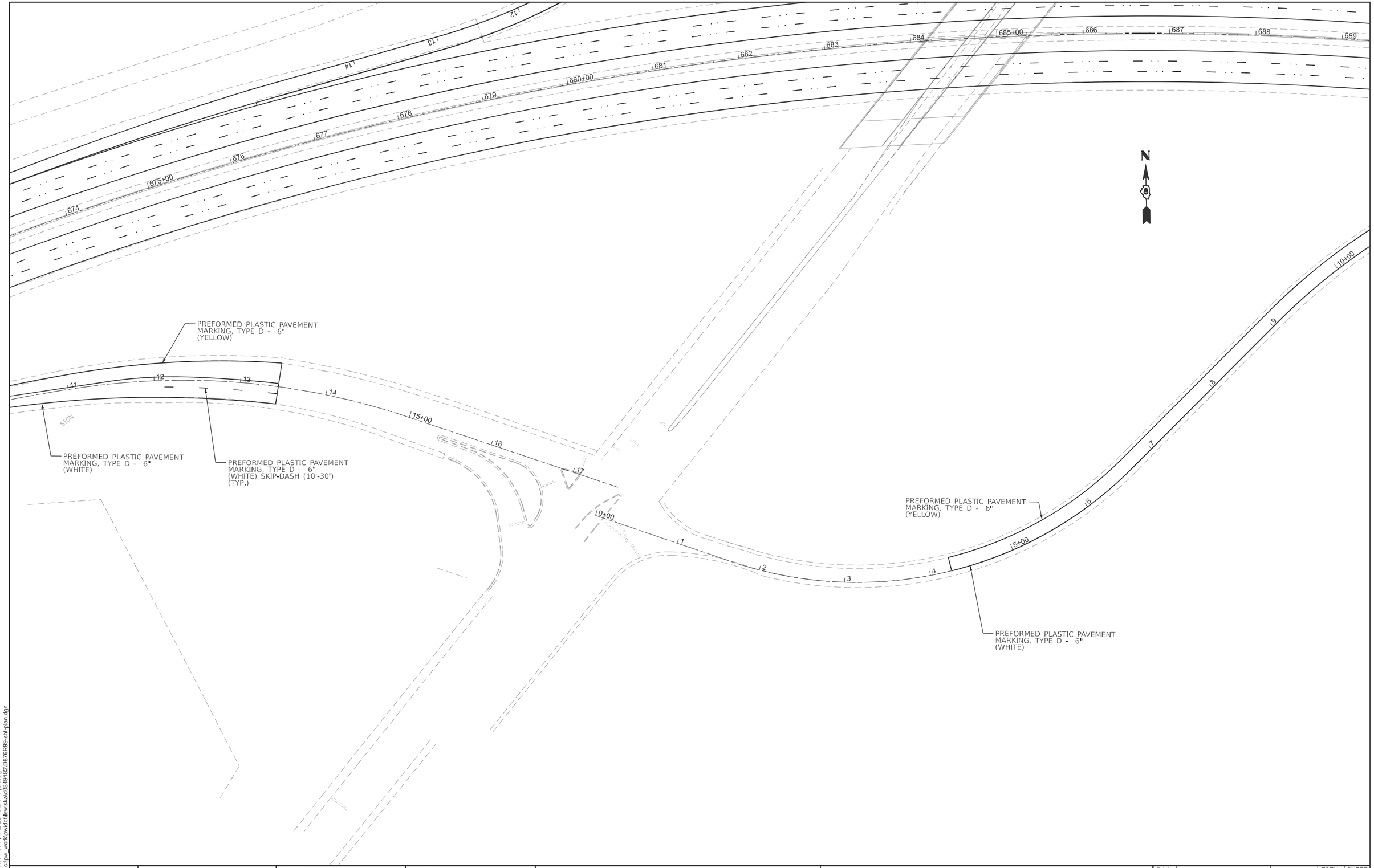

MODEL: US HWY 50 FINAL EB RAMP-1 [Sheet]
FILE NAME: c:\pw_work\pwidot\lewiskald\d0849182\D76R99-sht-plan.dgn

USER NAME = Kevin.Lewis	DESIGNED -	REVISED -	
	DRAWN -	REVISED -	
	CHECKED -	REVISED -	
PLOT DATE = 2/10/2025	DATE -	REVISED -	

STATE OF ILLINOIS
DEPARTMENT OF TRANSPORTATION

PAVEMENT MARKING PLANS US 50

SCALE: | SHEET 30 OF 31 SHEETS | STA. | TO STA.

F.A.I. RTE.	SECTION	COUNTY	TOTAL SHEETS	SHEET NO.
64	82-(4, 5, 6, 7)-1RS-2	ST. CLAIR	388	186
		CONTRACT NO. 76R99		
	ILLINOIS FED. AID PROJECT			

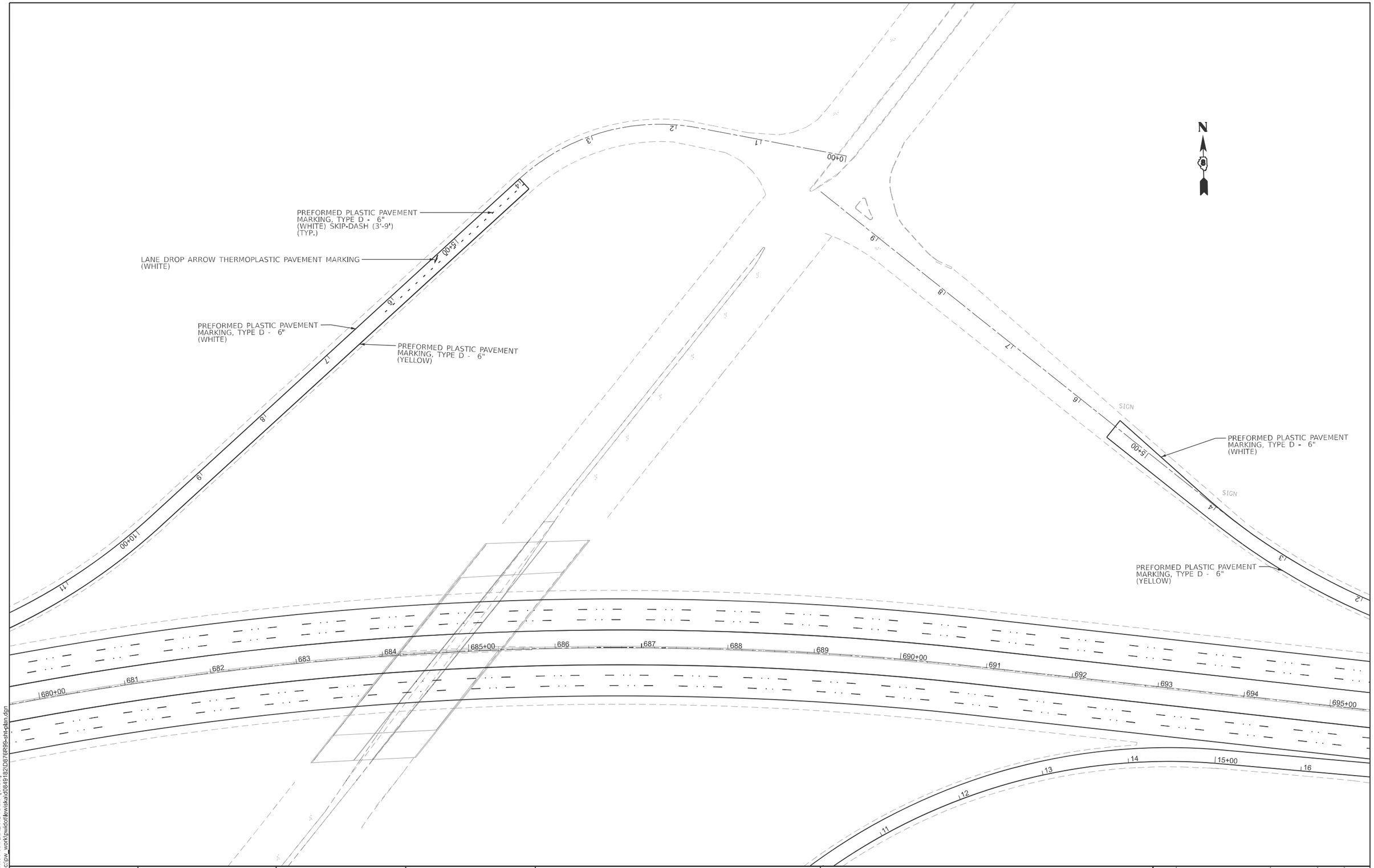

MODEL: US HWY 50 FINAL WB RAMP [Sheet]
FILE NAME: c:\pw_work\pwdot\lewiska\d0849182\D876R99-sht-plan.dgn

USER NAME = Kevin.Lewis	DESIGNED -	REVISED -
	DRAWN -	REVISED -
	CHECKED -	REVISED -
PLOT DATE = 2/10/2025	DATE -	REVISED -

STATE OF ILLINOIS
DEPARTMENT OF TRANSPORTATION

PAVEMENT MARKING PLANS US 50

SCALE: | SHEET 31 OF 31 SHEETS | STA. | TO STA.

F.A.I. RTE.	SECTION	COUNTY	TOTAL SHEETS	SHEET NO.
64	82-(4, 5, 6, 7)-1RS-2	ST. CLAIR	388	187
		CONTRACT NO. 76R99		
	ILLINOIS FED. AID PROJECT			

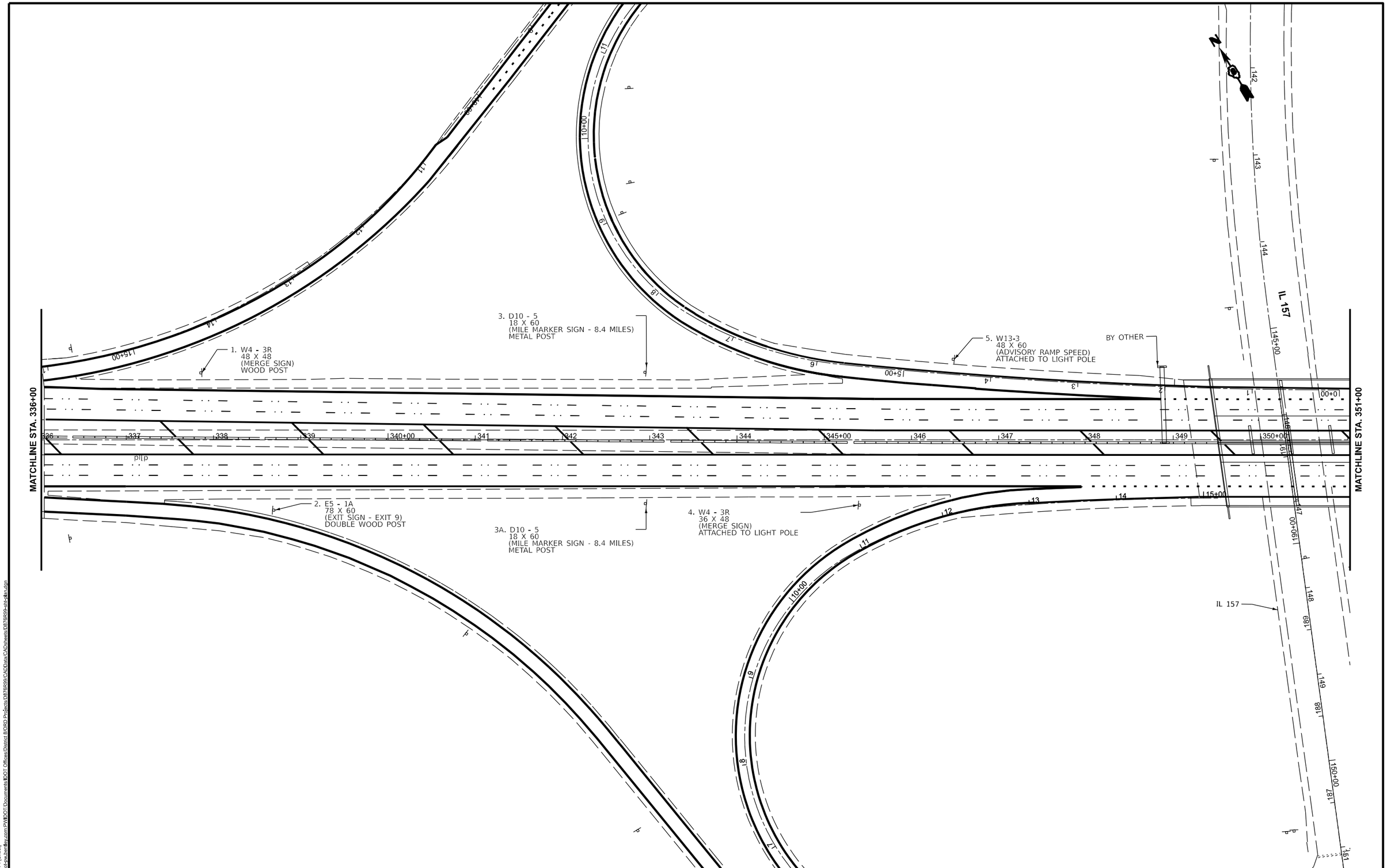

MODEL: EX64 - Plan 1 [Sheet]
FILE NAME: pw://idot-pw.bentley.com:PWIDOT/Documents/IDOT Offices/District 8/ORD Projects/D876R99/CADData/CADsheets/D876R99-sht-plan.dgn

USER NAME = John.P.Green	DESIGNED -	REVISED -	
	DRAWN -	REVISED -	
PLOT SCALE = $SCALE$	CHECKED -	REVISED -	
PLOT DATE = 11/12/2024	DATE -	REVISED -	

STATE OF ILLINOIS
DEPARTMENT OF TRANSPORTATION

MISCELLANEOUS SIGN PLANS

SCALE: | SHEET 1 OF 24 SHEETS | STA. | TO STA.

F.A. I. RTE.	SECTION	COUNTY	TOTAL SHEETS	SHEET NO.
64	82-(4, 5, 6, 7)-1RS-2	ST. CLAIR	388	188
		CONTRACT NO. 76R99		
		ILLINOIS	FED. AID PROJECT	

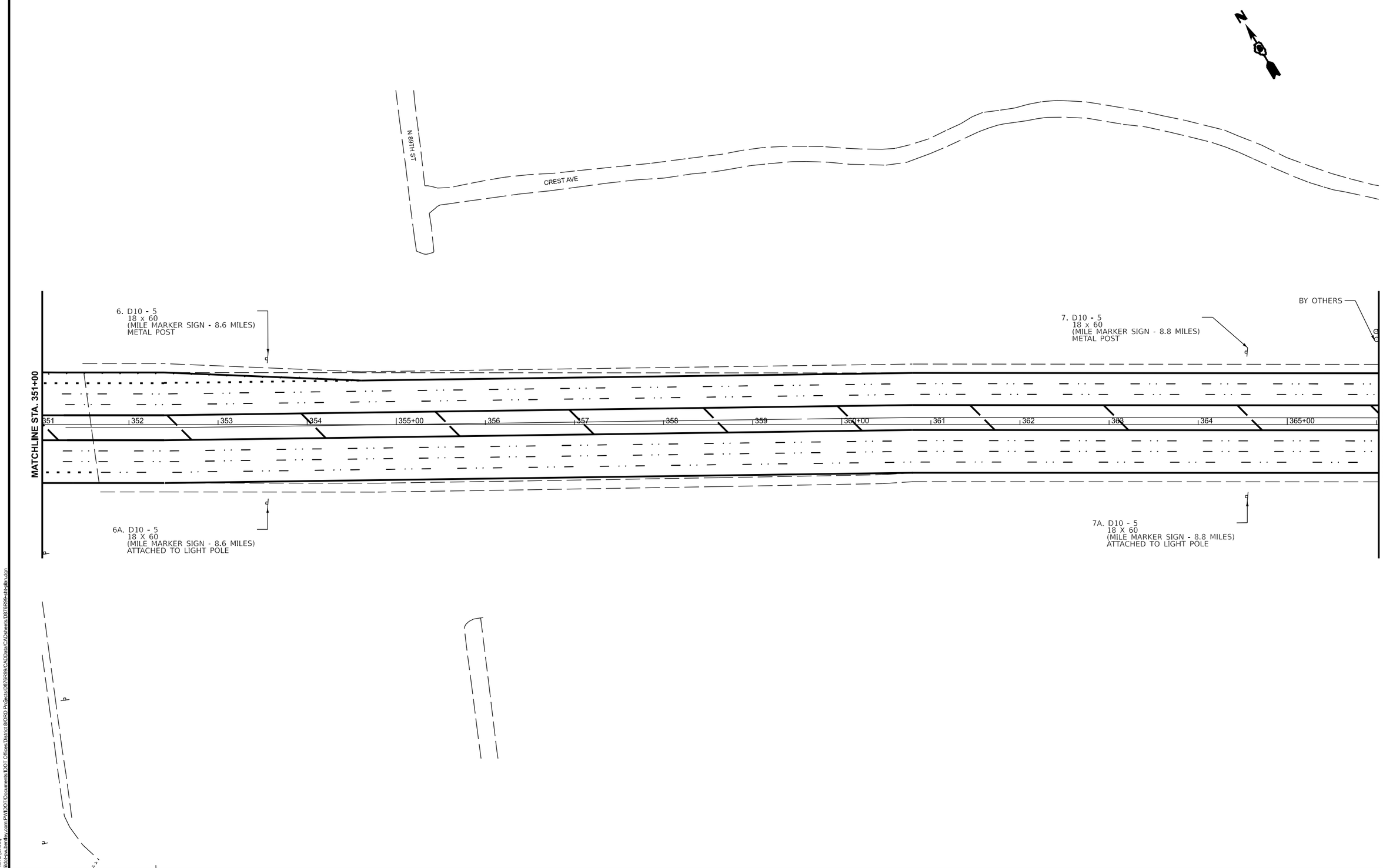

MODEL: EX64 - Plan 2 [Sheet]
FILE NAME: pw://idot-pw.bentley.com:PWIDOT/Documents/IDOT Offices/District 8/ORD Projects/D876R99/CADData/CADsheets/D876R99-sht-plan.dgn

USER NAME = John.P.Green	DESIGNED -	REVISED -	
	DRAWN -	REVISED -	
PLOT SCALE = $SCALE$	CHECKED -	REVISED -	
PLOT DATE = 11/12/2024	DATE -	REVISED -	

STATE OF ILLINOIS
DEPARTMENT OF TRANSPORTATION

MISCELLANEOUS SIGN PLANS

SCALE: | SHEET 2 OF 24 SHEETS | STA. | TO STA.

F.A. I. RTE.	SECTION	COUNTY	TOTAL SHEETS	SHEET NO.
64	82-(4,5,6,7)-1RS-2	ST. CLAIR	388	189
		CONTRACT NO. 76R99		
		ILLINOIS	FED. AID PROJECT	

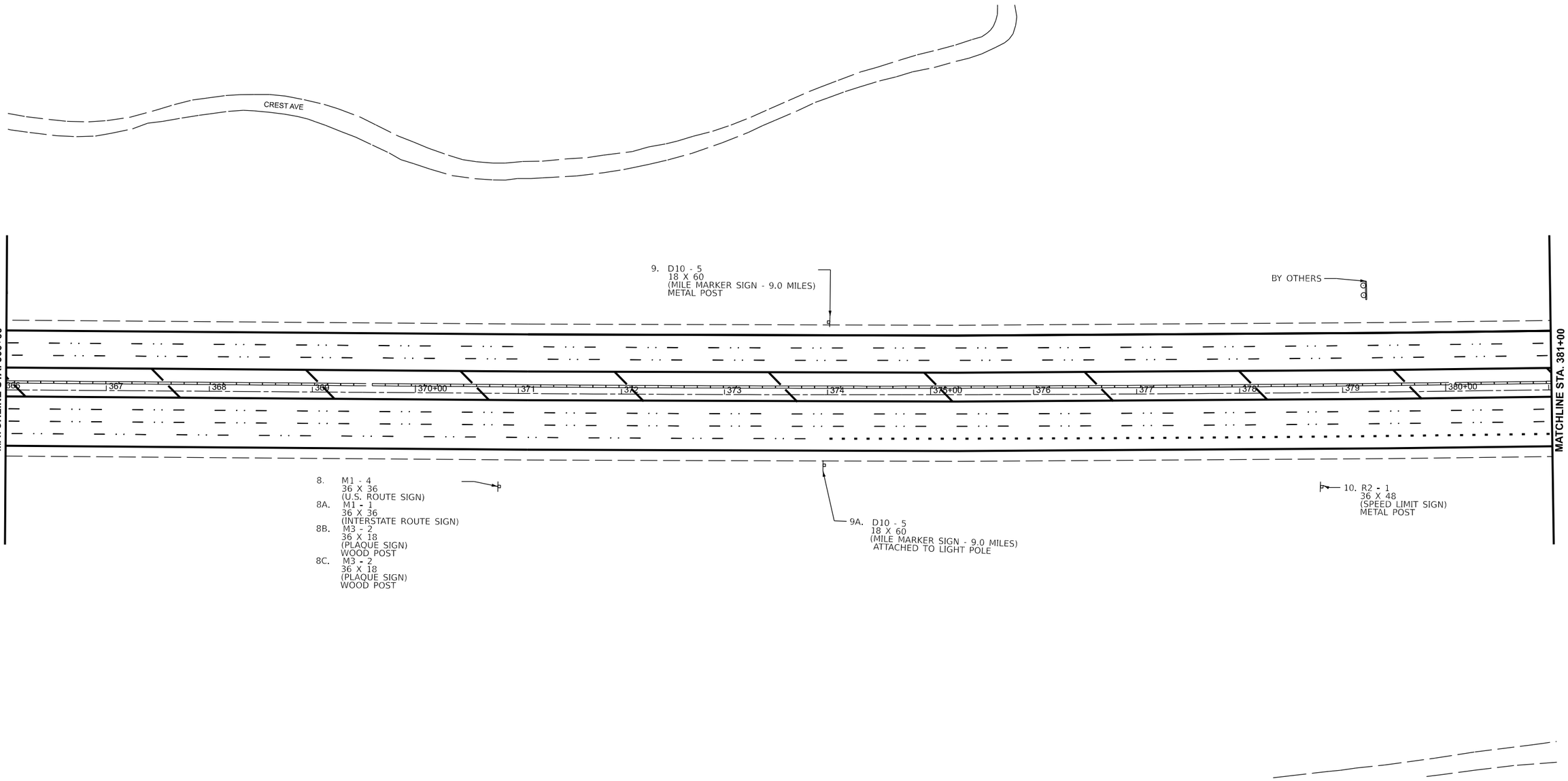

MODEL: EX64 - Plan 3 [Sheet]
FILE NAME: pw:///dot-pw.bentley.com:PWIDOT/Documents/IDOT Offices/District 8/ORD Projects/D8776R99/CADData/CADsheets/D8776R99-sht-pln.dgn

USER NAME = John.P.Green	DESIGNED -	REVISED -	
	DRAWN -	REVISED -	
PLOT SCALE = $SCALE$	CHECKED -	REVISED -	
PLOT DATE = 11/12/2024	DATE -	REVISED -	

STATE OF ILLINOIS
DEPARTMENT OF TRANSPORTATION

MISCELLANEOUS SIGN PLANS

SCALE: | SHEET 3 OF 24 SHEETS | STA. | TO STA.

F.A.I. RTE.	SECTION	COUNTY	TOTAL SHEETS	SHEET NO.
64	82-(4,5,6,7)-1RS-2	ST. CLAIR	388	190
		CONTRACT NO. 76R99		
	ILLINOIS FED. AID PROJECT			

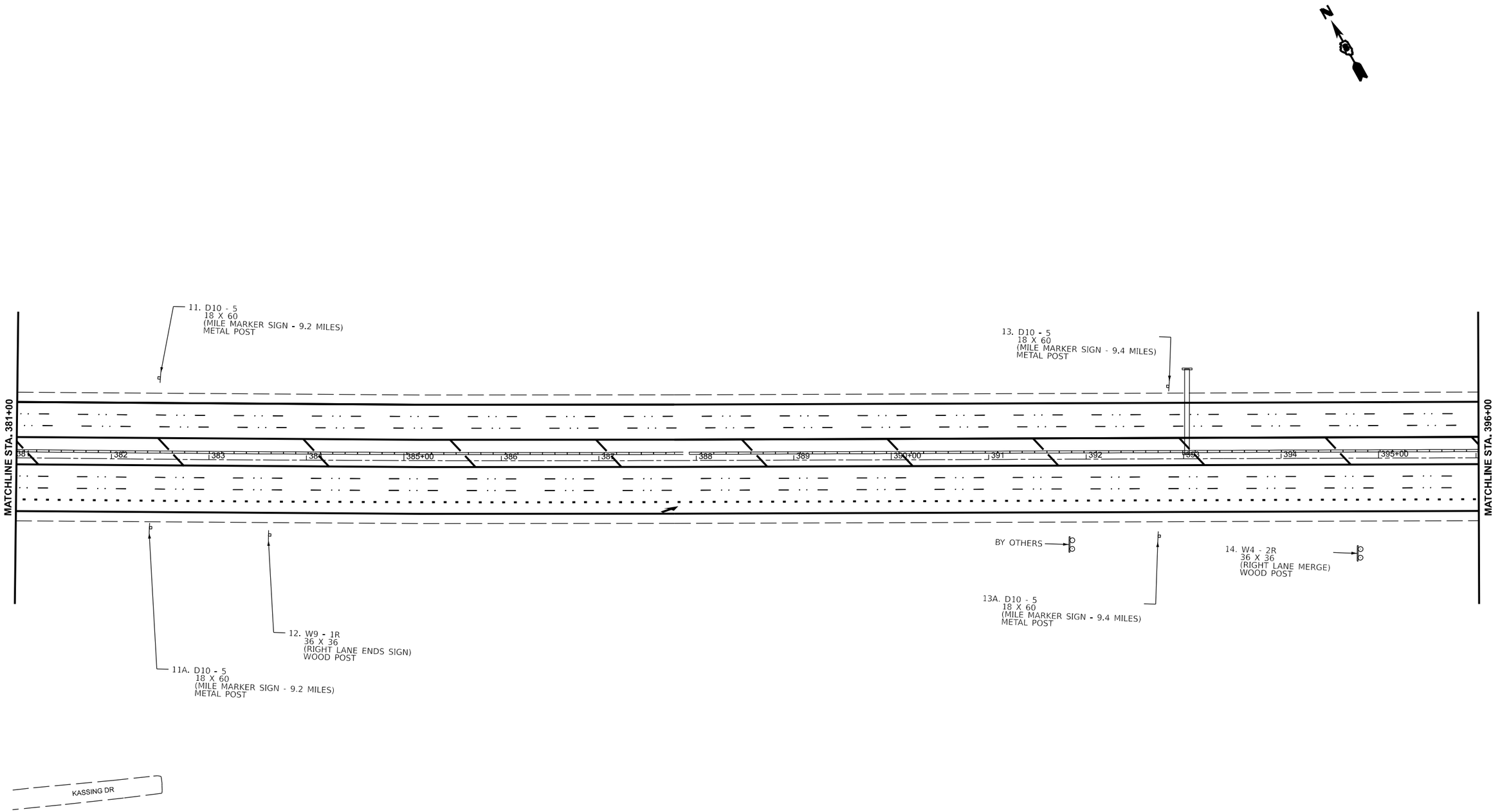

MODEL: EX64 - Plan 4 [Sheet]
FILE NAME: pw://idot-pw.bentley.com:PWIDOT/Documents/IDOT Offices/District 8/ORD Projects/D876R99/CADData/CADsheets/D876R99-sht-plan.dgn

USER NAME = John.P.Green	DESIGNED -	REVISED -	
	DRAWN -	REVISED -	
PLOT SCALE = $SCALE$	CHECKED -	REVISED -	
PLOT DATE = 11/12/2024	DATE -	REVISED -	

STATE OF ILLINOIS
DEPARTMENT OF TRANSPORTATION

MISCELLANEOUS SIGN PLANS

SCALE: | SHEET 4 OF 24 SHEETS | STA. | TO STA.

F.A. I. RTE.	SECTION	COUNTY	TOTAL SHEETS	SHEET NO.
64	82-(4,5,6,7)-1RS-2	ST. CLAIR	388	191
		CONTRACT NO. 76R99		
		ILLINOIS	FED. AID PROJECT	

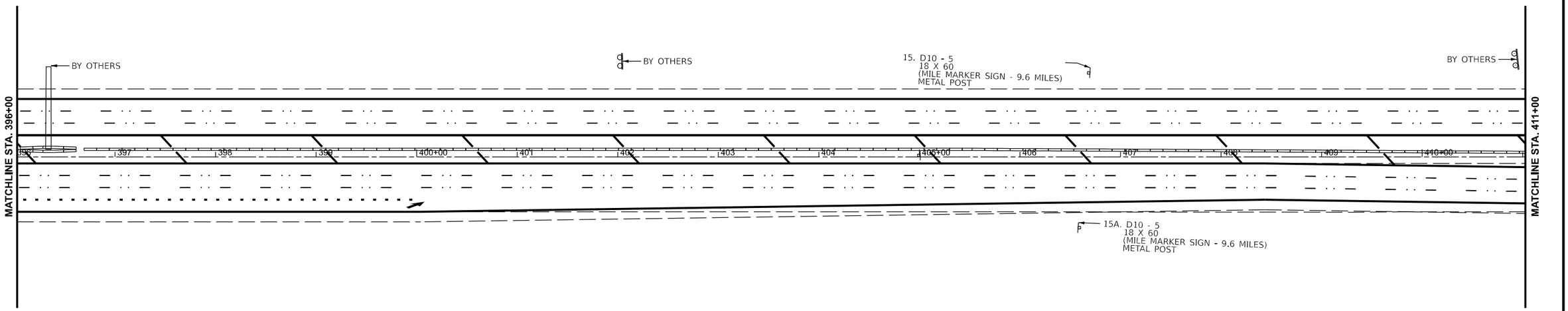

MODEL: EX64 - Plan 5 [Sheet]
FILE NAME: pw:\\ilod-pw.bentley.com:PWIDOT Documents\IDOT Offices\District 8\ORD Projects\D8776R99\CADData\CADsheets\D8776R99-sht-plan.dgn

USER NAME = John.P.Green	DESIGNED -	REVISED -	
	DRAWN -	REVISED -	
PLOT SCALE = $SCALE$	CHECKED -	REVISED -	
PLOT DATE = 11/12/2024	DATE -	REVISED -	

STATE OF ILLINOIS
DEPARTMENT OF TRANSPORTATION

MISCELLANEOUS SIGN PLANS

SCALE: | SHEET 5 OF 24 SHEETS | STA. | TO STA.

F.A.I. RTE.	SECTION	COUNTY	TOTAL SHEETS	SHEET NO.
64	82-(4,5,6,7)-1RS-2	ST. CLAIR	388	192
		CONTRACT NO. 76R99		
	ILLINOIS FED. AID PROJECT			

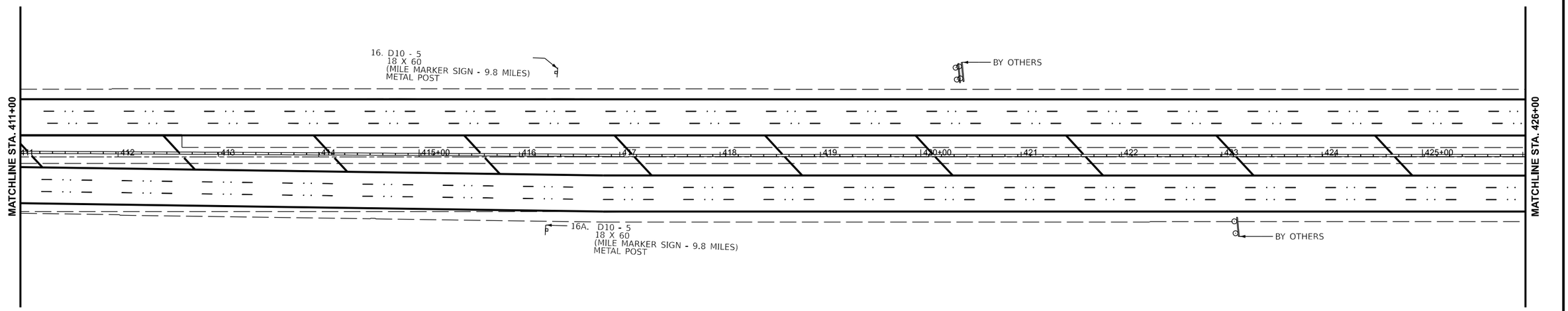

MODEL: EX64 - Plan 6 [Sheet]
FILE NAME: pw://dot-pw.bentley.com:PWDOT/Documents/IDOT Offices/District 8/ORD Projects/D876R99/CADData/CADsheets/D876R99-sht-plan.dgn

USER NAME = John.P.Green	DESIGNED -	REVISED -	
	DRAWN -	REVISED -	
PLOT SCALE = $SCALE$	CHECKED -	REVISED -	
PLOT DATE = 11/12/2024	DATE -	REVISED -	

STATE OF ILLINOIS
DEPARTMENT OF TRANSPORTATION

MISCELLANEOUS SIGN PLANS

SCALE: | SHEET 6 OF 24 SHEETS | STA. | TO STA.

F.A.I. RTE.	SECTION	COUNTY	TOTAL SHEETS	SHEET NO.
64	82-(4,5,6,7)-1RS-2	ST. CLAIR	388	193
		CONTRACT NO. 76R99		
	ILLINOIS FED. AID PROJECT			

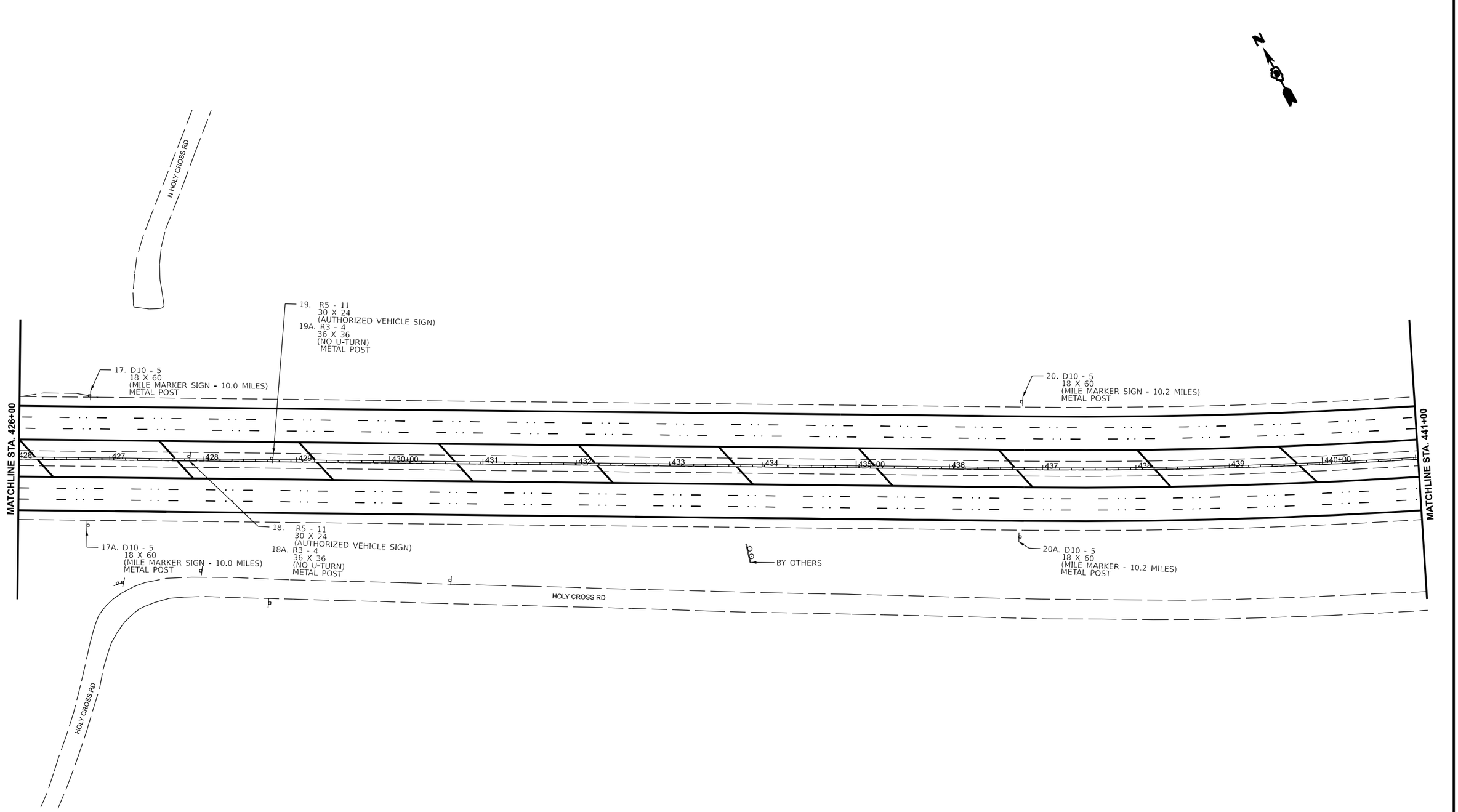

MODEL: EX64 - Plan 7 [Sheet]
FILE NAME: pw://idot-pw.bentley.com:PWIDOT/Documents/IDOT Offices/District 8/ORD Projects/D876R99/CADData/CADsheets/D876R99-sht-plan.dgn

USER NAME = John.P.Green	DESIGNED -	REVISED -	
	DRAWN -	REVISED -	
PLOT SCALE = $SCALE$	CHECKED -	REVISED -	
PLOT DATE = 11/12/2024	DATE -	REVISED -	

STATE OF ILLINOIS
DEPARTMENT OF TRANSPORTATION

MISCELLANEOUS SIGN PLANS

SCALE: | SHEET 7 OF 24 SHEETS | STA. | TO STA.

F.A. I. RTE.	SECTION	COUNTY	TOTAL SHEETS	SHEET NO.
64	82-(4,5,6,7)-1RS-2	ST. CLAIR	388	194
		CONTRACT NO. 76R99		
		ILLINOIS	FED. AID PROJECT	

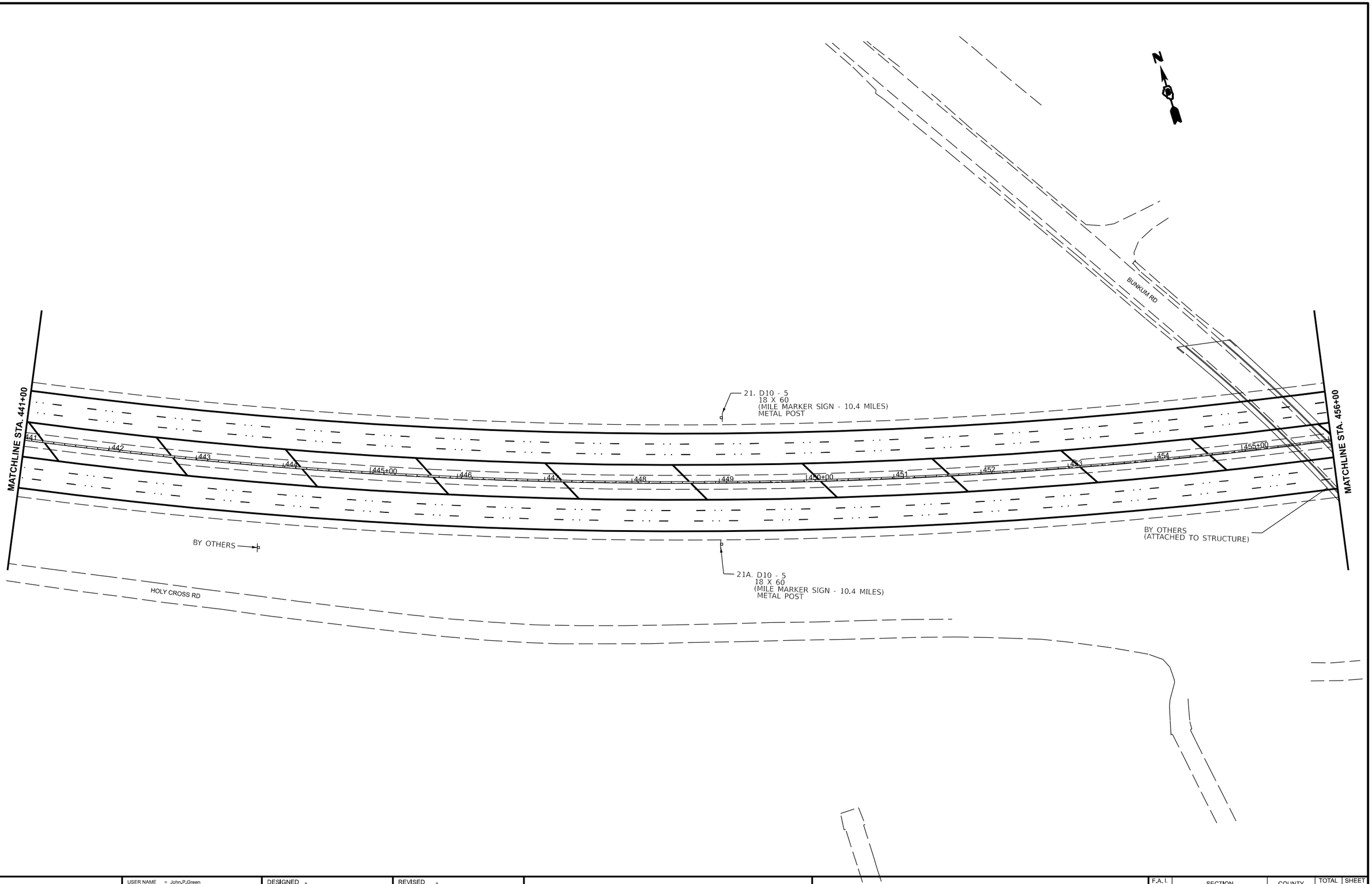

MODEL: EX64 • Plan 8 [Sheet]
FILE NAME: pw:\\ilcd-pw.bentley.com:PWIDOT Documents\IDOT Offices\District 8\ORD Projects\D876R99\CADData\CADsheets\D8T6R99-sht-pln.dgn

USER NAME = John.P.Green	DESIGNED -	REVISED -
	DRAWN -	REVISED -
PLOT SCALE = $SCALE$	CHECKED -	REVISED -
PLOT DATE = 11/12/2024	DATE -	REVISED -

STATE OF ILLINOIS
DEPARTMENT OF TRANSPORTATION

MISCELLANEOUS SIGN PLANS

SCALE: | SHEET 8 OF 24 SHEETS | STA. | TO STA.

F.A. I. RTE.	SECTION	COUNTY	TOTAL SHEETS	SHEET NO.
64	82-(4,5,6,7)-1RS-2	ST. CLAIR	388	195
		CONTRACT NO. 76R99		
	ILLINOIS FED. AID PROJECT			

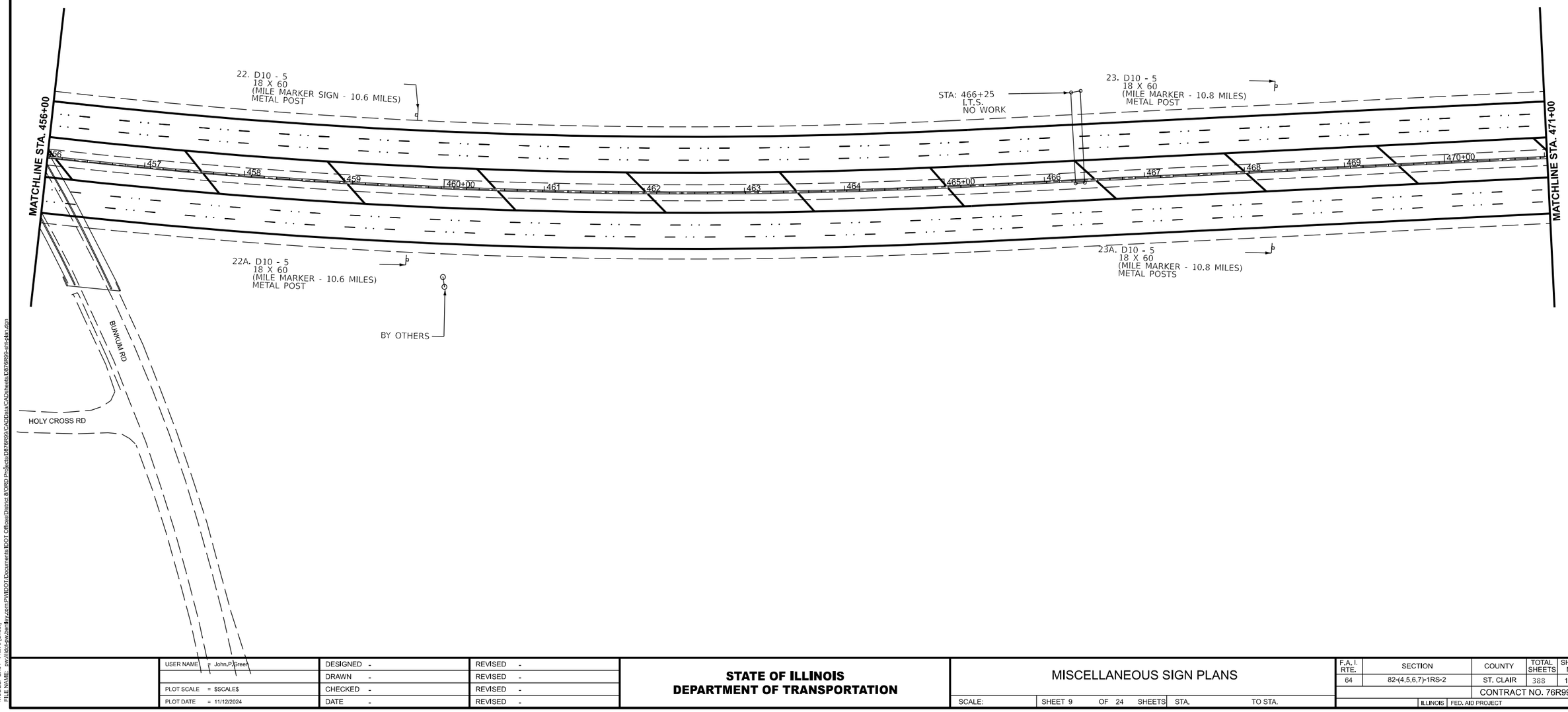

USER NAME = John.P.Green	DESIGNED -	REVISED -	**STATE OF ILLINOIS** **DEPARTMENT OF TRANSPORTATION**
	DRAWN -	REVISED -	
PLOT SCALE = $SCALE$	CHECKED -	REVISED -	
PLOT DATE = 11/12/2024	DATE -	REVISED -	

MISCELLANEOUS SIGN PLANS

SCALE: | SHEET 9 OF 24 SHEETS | STA. | TO STA.

F.A.I. RTE.	SECTION	COUNTY	TOTAL SHEETS	SHEET NO.
64	82-(4,5,6,7)-1RS-2	ST. CLAIR	388	196
		CONTRACT NO. 76R99		
	ILLINOIS FED. AID PROJECT			

MODEL: EX64 - Plan 9 [Sheet]
FILE NAME: pw://ildot-pw.bentley.com:PWIDOT/Documents/IDOT Offices/District 8/ORD Projects/D876R99/CADData/CADsheets/D876R99-sht-Plan.dgn

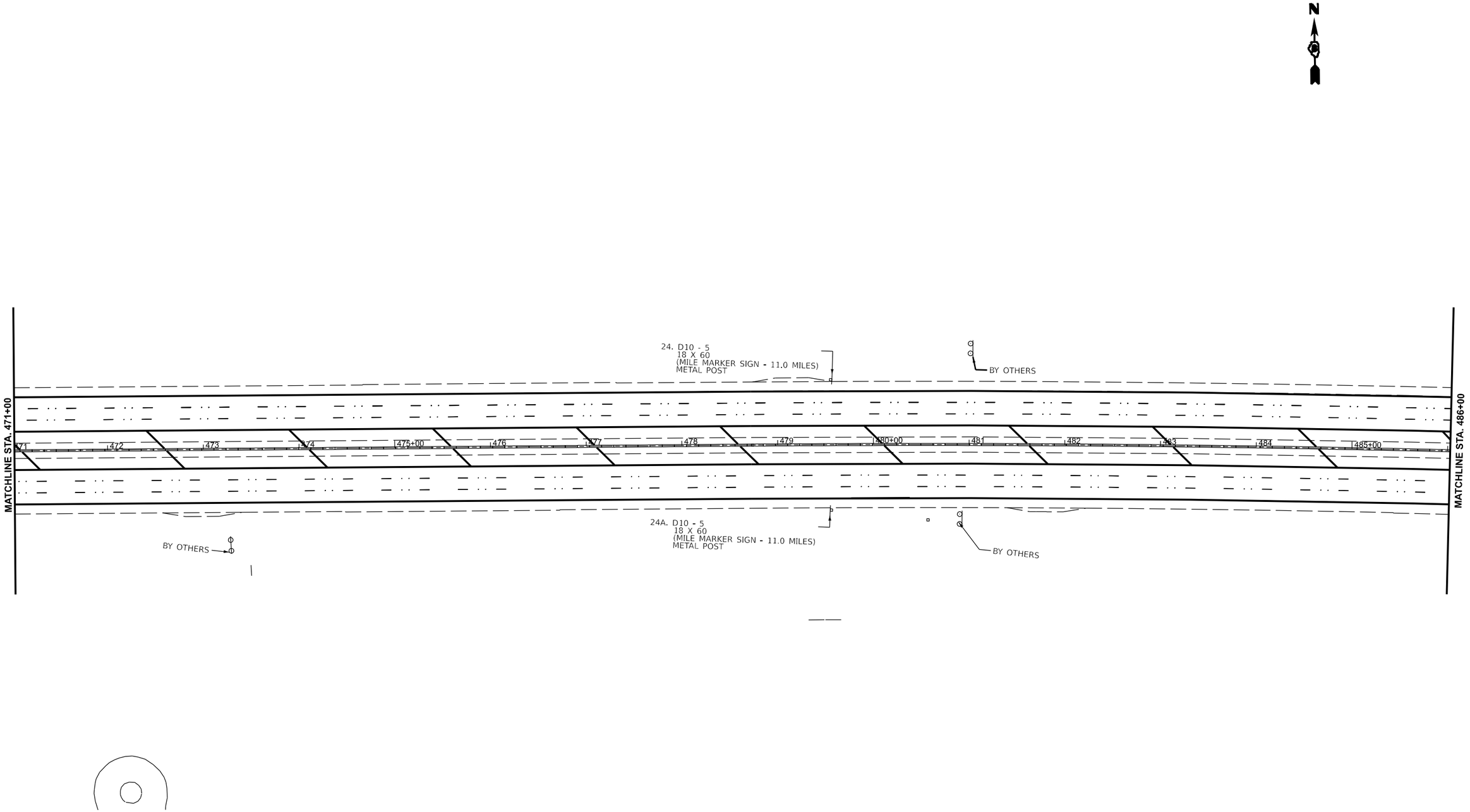

MODEL: EX64 - Plan 10 [Sheet]
FILE NAME: pw://ildot-pw.bentley.com:PWIDOT/Documents/IDOT Offices/District 8/ORD Projects/D876R99/CADData/CADsheets/D876R99-sht-plan.dgn

USER NAME = John.P.Green	DESIGNED -	REVISED -	
	DRAWN -	REVISED -	
PLOT SCALE = $SCALE$	CHECKED -	REVISED -	
PLOT DATE = 11/12/2024	DATE -	REVISED -	

STATE OF ILLINOIS
DEPARTMENT OF TRANSPORTATION

MISCELLANEOUS SIGN PLANS

SCALE: | SHEET 10 OF 24 SHEETS | STA. | TO STA.

F.A. I. RTE.	SECTION	COUNTY	TOTAL SHEETS	SHEET NO.
64	82-(4,5,6,7)-1RS-2	ST. CLAIR	388	197
		CONTRACT NO. 76R99		
		ILLINOIS	FED. AID PROJECT	

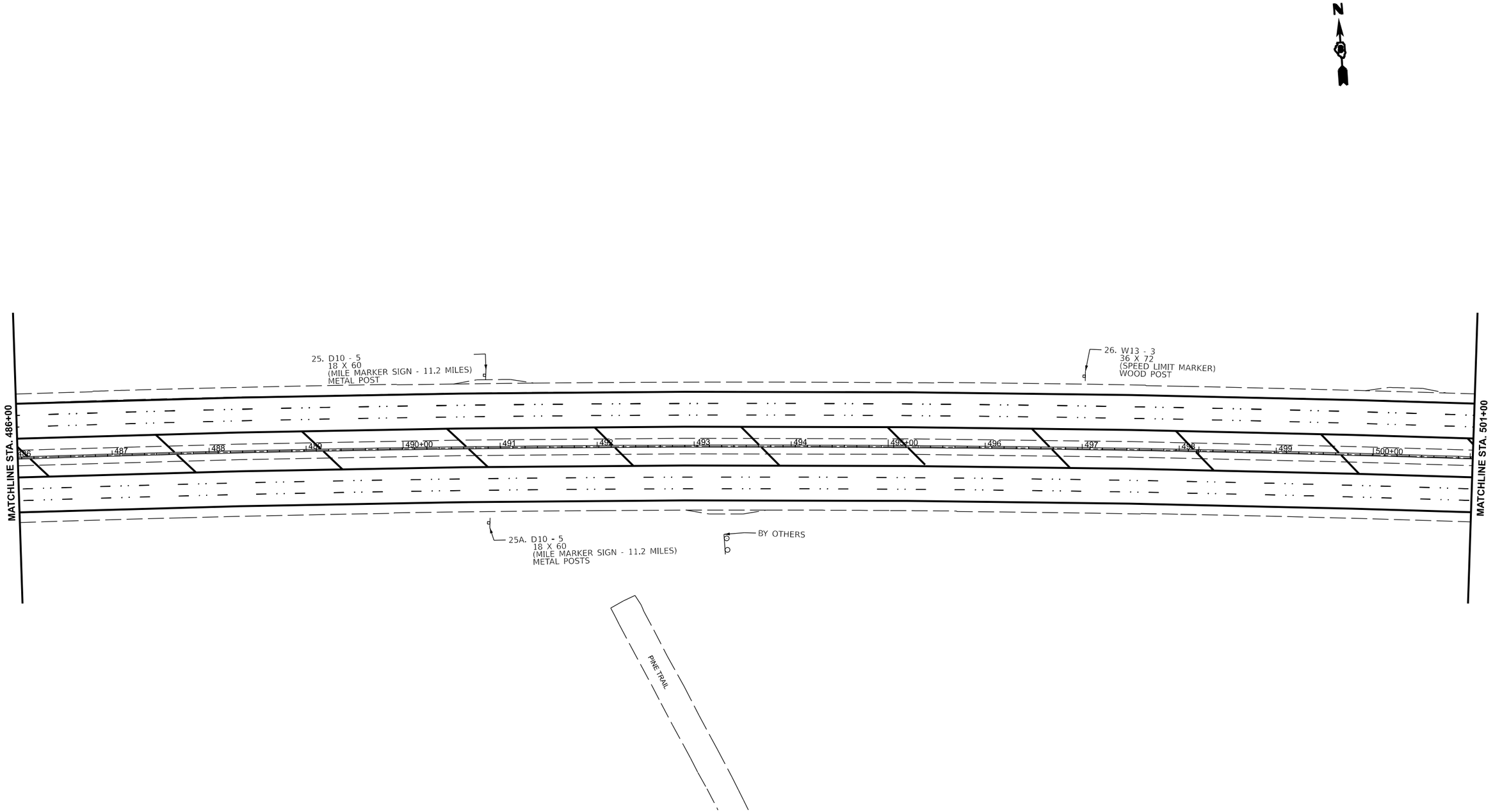

MODEL: EX64 - Plan 11 [Sheet]
FILE NAME: pw://idot-pw.bentley.com:PWIDOT/Documents/IDOT Offices/District 8/ORD Projects/D876R99/CADData/CADsheets/D876R99-sht-plan.dgn

USER NAME = John.P.Green	DESIGNED -	REVISED -	
	DRAWN -	REVISED -	
PLOT SCALE = $SCALE$	CHECKED -	REVISED -	
PLOT DATE = 11/12/2024	DATE -	REVISED -	

STATE OF ILLINOIS
DEPARTMENT OF TRANSPORTATION

MISCELLANEOUS SIGN PLANS

SCALE: | SHEET 11 OF 24 SHEETS | STA. | TO STA.

F.A. I. RTE.	SECTION	COUNTY	TOTAL SHEETS	SHEET NO.
64	82-(4,5,6,7)-1RS-2	ST. CLAIR	388	198
		CONTRACT NO. 76R99		
		ILLINOIS	FED. AID PROJECT	

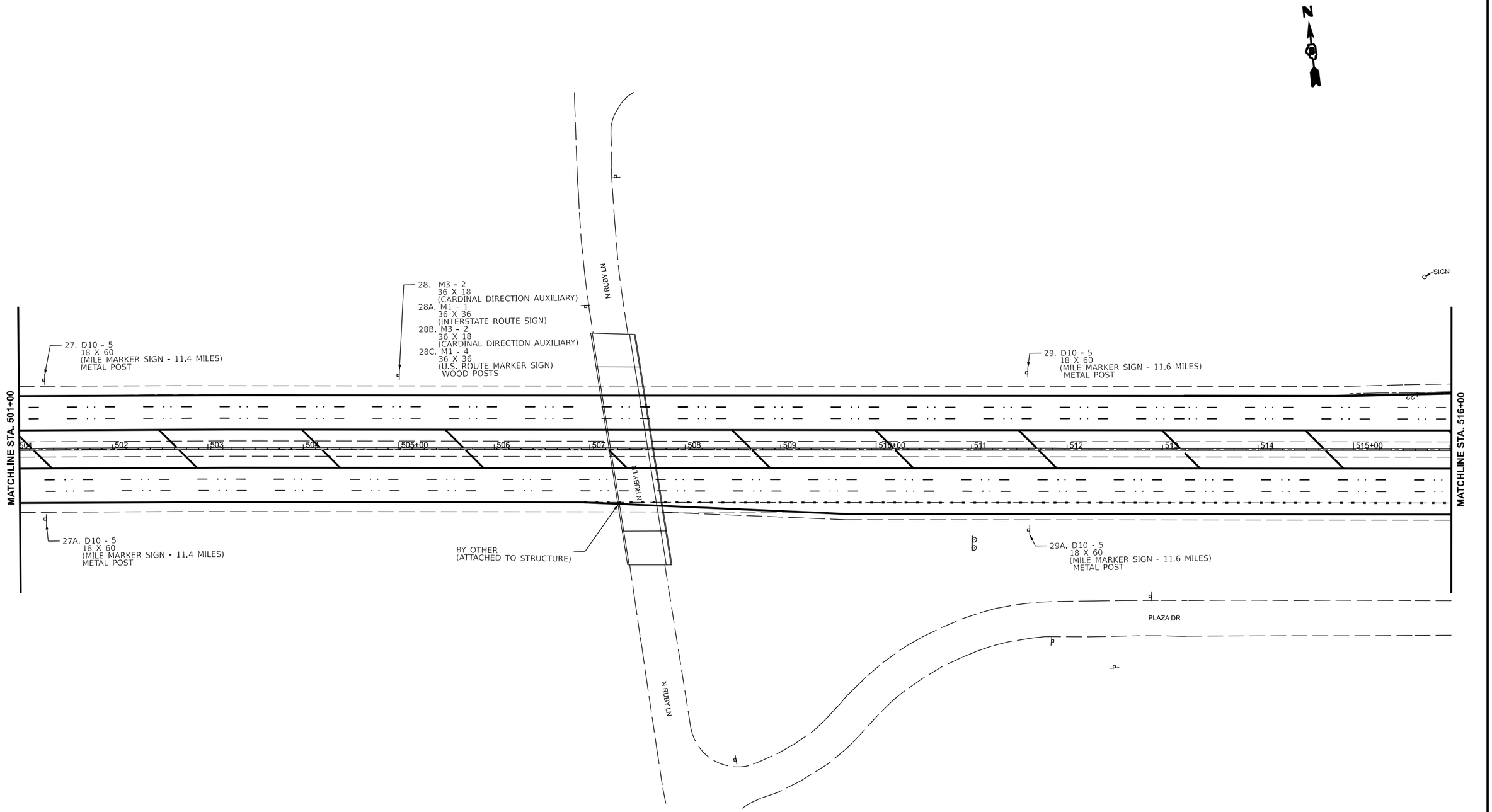

MODEL: EX64 • Plan 12 [Sheet]
FILE NAME: pw://dot-pw.bentley.com:PWDOT/Documents/IDOT Offices/District 8/ORD Projects/D876R99/CADData/CADSheets/D876R99-sht-plan.dgn

USER NAME = John.P.Green	DESIGNED -	REVISED -	
	DRAWN -	REVISED -	
PLOT SCALE = $SCALE$	CHECKED -	REVISED -	
PLOT DATE = 11/12/2024	DATE -	REVISED -	

STATE OF ILLINOIS
DEPARTMENT OF TRANSPORTATION

MISCELLANEOUS SIGN PLANS

SCALE: | SHEET 12 OF 24 SHEETS | STA. | TO STA.

F.A.I. RTE.	SECTION	COUNTY	TOTAL SHEETS	SHEET NO.
64	82-(4,5,6,7)-1RS-2	ST. CLAIR	388	199
		CONTRACT NO. 76R99		
	ILLINOIS	FED. AID PROJECT		

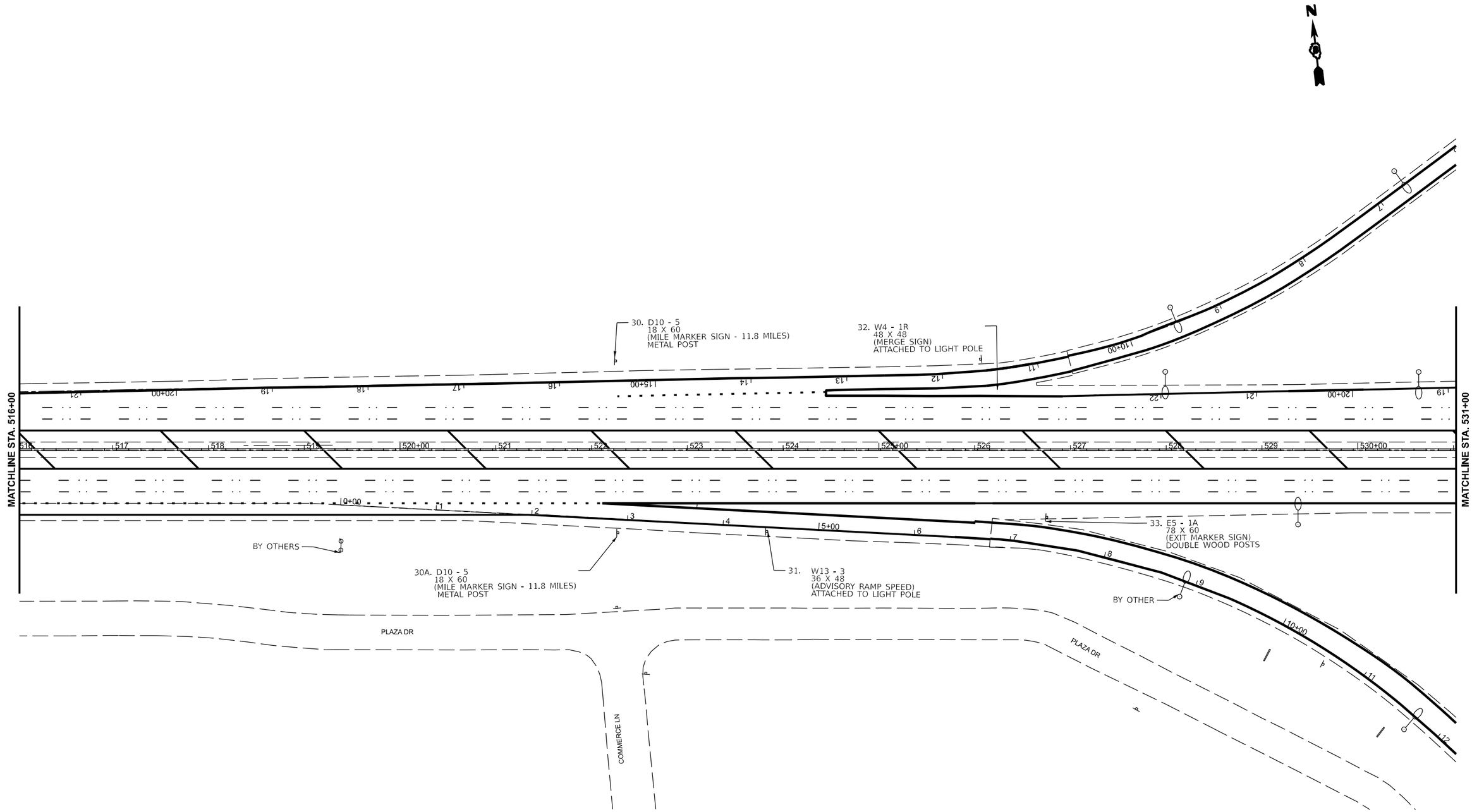

MODEL: EX64 - Plan 13 [Sheet]
FILE NAME: pw:///dot-pw.bentley.com:PWIDOT/Documents/IDOT Offices/District 8/ORD Projects/D876R99/CADData/CADsheets/D8T6R99-sht-Plan.dgn

USER NAME = John.P.Green	DESIGNED -	REVISED -	
	DRAWN -	REVISED -	
PLOT SCALE = $SCALE$	CHECKED -	REVISED -	
PLOT DATE = 11/12/2024	DATE -	REVISED -	

STATE OF ILLINOIS
DEPARTMENT OF TRANSPORTATION

MISCELLANEOUS SIGN PLANS

SCALE: | SHEET 13 OF 24 SHEETS | STA. | TO STA.

F.A. I. RTE.	SECTION	COUNTY	TOTAL SHEETS	SHEET NO.
64	82-(4,5,6,7)-1RS-2	ST. CLAIR	388	200
		CONTRACT NO. 76R99		
	ILLINOIS FED. AID PROJECT			

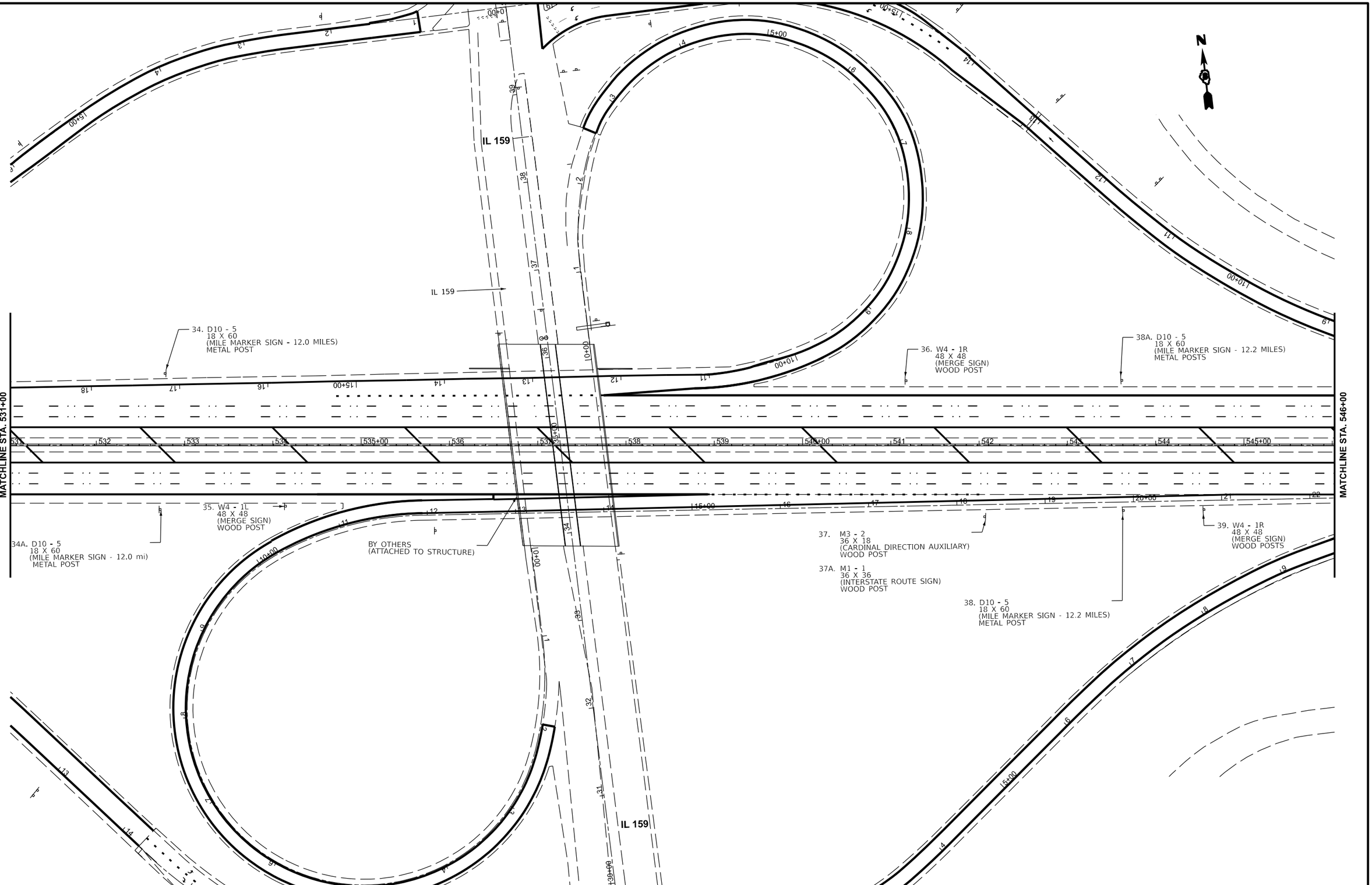

MODEL: EX64 - Plan 14 [Sheet]
FILE NAME: pw://idot-pw.bentley.com:PWIDOT/Documents/IDOT Offices/District 8/ORD Projects/D876R99/CADData/CADsheets/D876R99-sht-plan.dgn

USER NAME = John.P.Green	DESIGNED -	REVISED -	
	DRAWN -	REVISED -	
PLOT SCALE = $SCALE$	CHECKED -	REVISED -	
PLOT DATE = 11/12/2024	DATE -	REVISED -	

STATE OF ILLINOIS
DEPARTMENT OF TRANSPORTATION

MISCELLANEOUS SIGN PLANS

SCALE: | SHEET 14 OF 24 SHEETS | STA. | TO STA.

F.A. I. RTE.	SECTION	COUNTY	TOTAL SHEETS	SHEET NO.
64	82-(4,5,6,7)-1RS-2	ST. CLAIR	388	201
		CONTRACT NO. 76R99		
		ILLINOIS	FED. AID PROJECT	

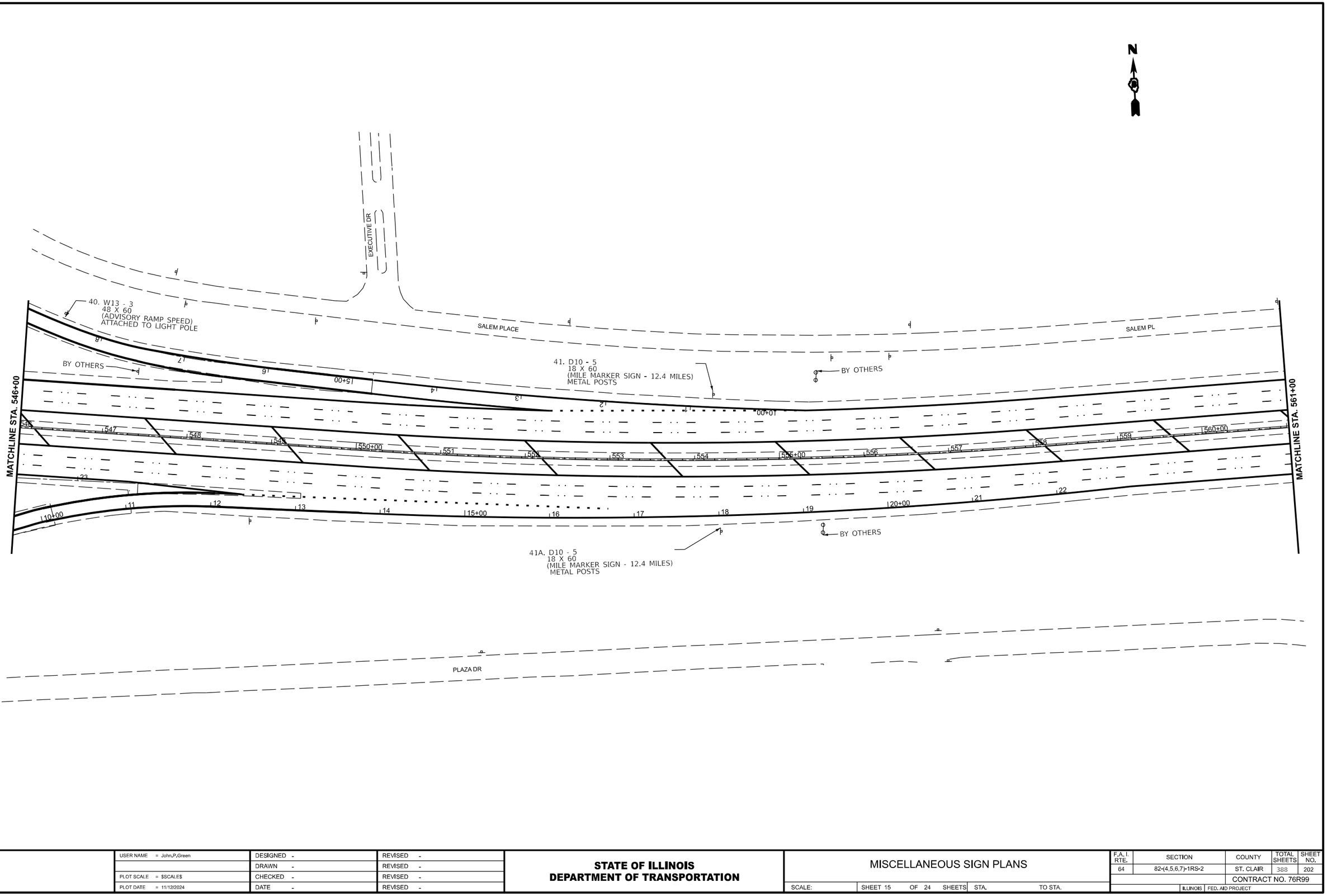

MODEL: EX64 - Plan 15 [Sheet]
FILE NAME: pw://idot-pw.bentley.com:PWIDOT/Documents/IDOT Offices/District 8/ORD Projects/D876R99/CADData/CADsheets/D876R99-sht-plan.dgn

USER NAME = John.P.Green	DESIGNED -	REVISED -	
	DRAWN -	REVISED -	
PLOT SCALE = $SCALE$	CHECKED -	REVISED -	
PLOT DATE = 11/12/2024	DATE -	REVISED -	

STATE OF ILLINOIS
DEPARTMENT OF TRANSPORTATION

MISCELLANEOUS SIGN PLANS

SCALE: | SHEET 15 OF 24 SHEETS | STA. | TO STA.

F.A.I. RTE.	SECTION	COUNTY	TOTAL SHEETS	SHEET NO.
64	82-(4,5,6,7)-1RS-2	ST. CLAIR	388	202
		CONTRACT NO. 76R99		
		ILLINOIS	FED. AID PROJECT	

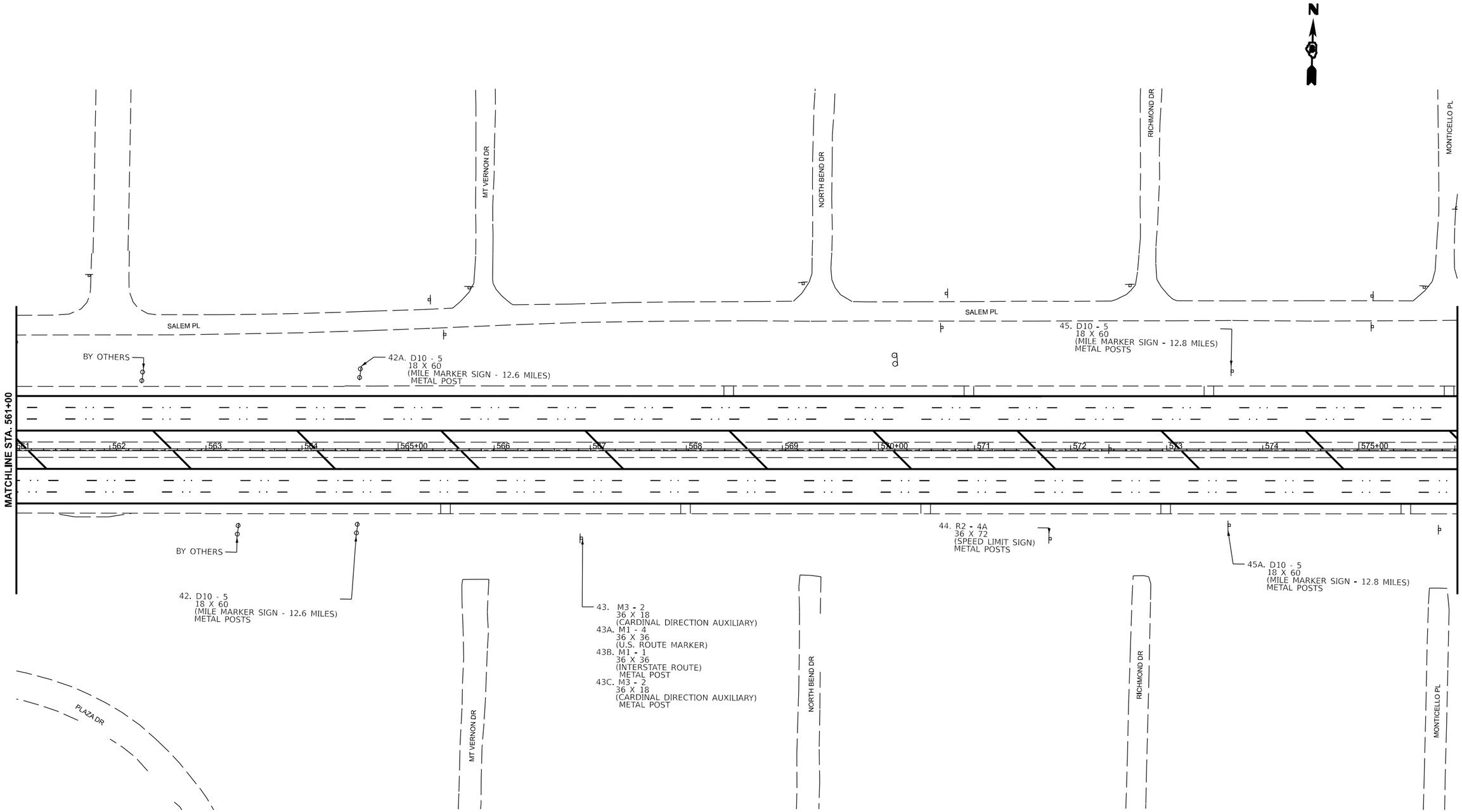

MODEL: EX64 - Plan 16 [Sheet]
FILE NAME: pw://idot-pw.bentley.com:PWIDOT/Documents/IDOT Offices/District 8/ORD Projects/D876R99/CADData/CADsheets/D876R99-sht-plan.dgn

USER NAME = John.P.Green	DESIGNED -	REVISED -	
	DRAWN -	REVISED -	
PLOT SCALE = $SCALE$	CHECKED -	REVISED -	
PLOT DATE = 11/12/2024	DATE -	REVISED -	

STATE OF ILLINOIS
DEPARTMENT OF TRANSPORTATION

MISCELLANEOUS SIGN PLANS

SCALE: | SHEET 16 OF 24 SHEETS | STA. | TO STA.

F.A. I. RTE.	SECTION	COUNTY	TOTAL SHEETS	SHEET NO.
64	82-(4,5,6,7)-1RS-2	ST. CLAIR	388	203
		CONTRACT NO. 76R99		
		ILLINOIS	FED. AID PROJECT	

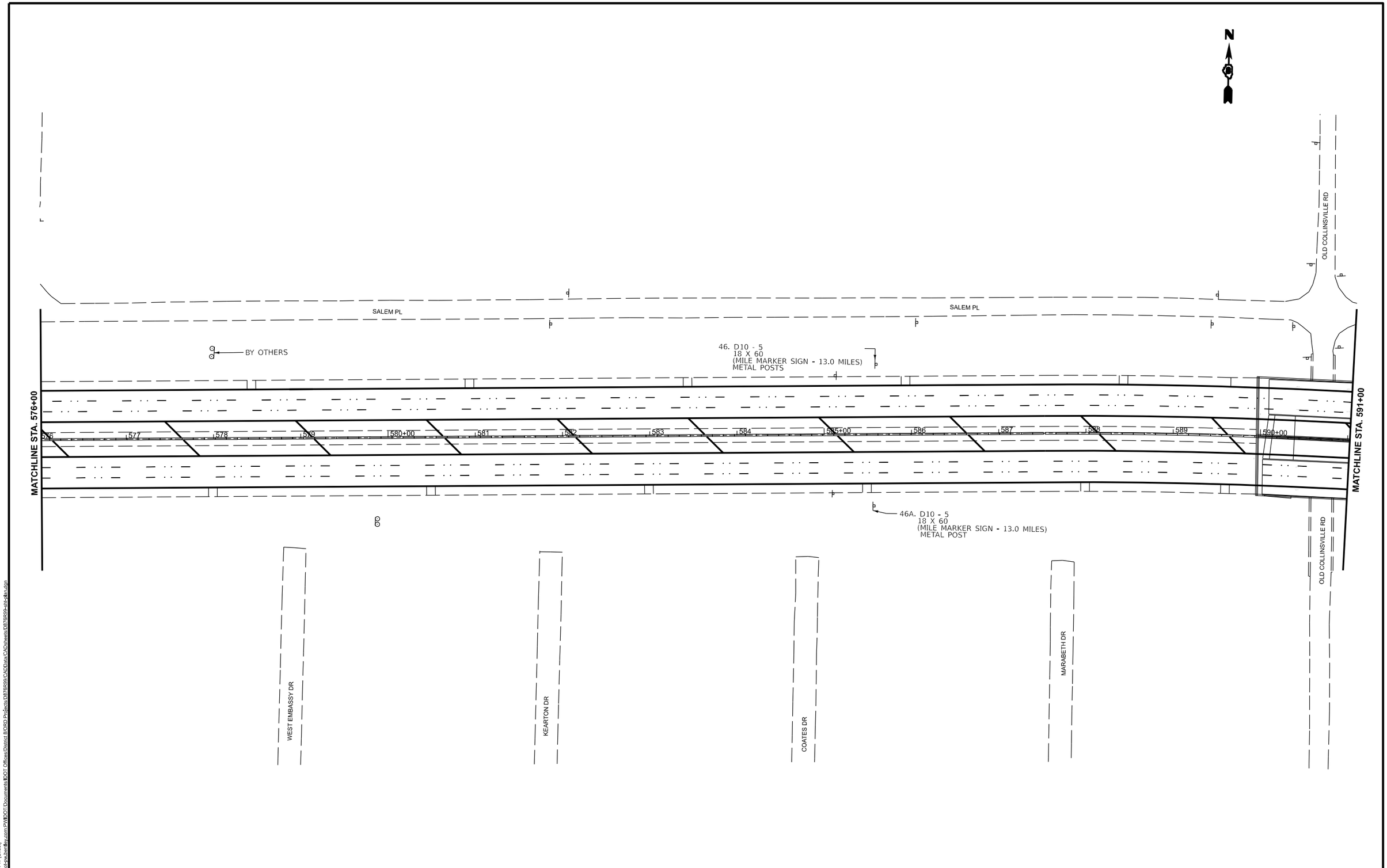

MODEL: EX64 - Plan 17 [Sheet]
FILE NAME: pw://idot-pw.bentley.com:PWIDOT/Documents/IDOT Offices/District 8/ORD Projects/D876R99/CADData/CADsheets/D876R99-sht-plan.dgn

USER NAME = John.P.Green	DESIGNED -	REVISED -	
	DRAWN -	REVISED -	
PLOT SCALE = $SCALE$	CHECKED -	REVISED -	
PLOT DATE = 11/12/2024	DATE -	REVISED -	

STATE OF ILLINOIS
DEPARTMENT OF TRANSPORTATION

MISCELLANEOUS SIGN PLANS

SCALE: | SHEET 17 OF 24 SHEETS | STA. | TO STA.

F.A. I. RTE.	SECTION	COUNTY	TOTAL SHEETS	SHEET NO.
64	82-(4,5,6,7)-1RS-2	ST. CLAIR	388	204
		CONTRACT NO. 76R99		
		ILLINOIS	FED. AID PROJECT	

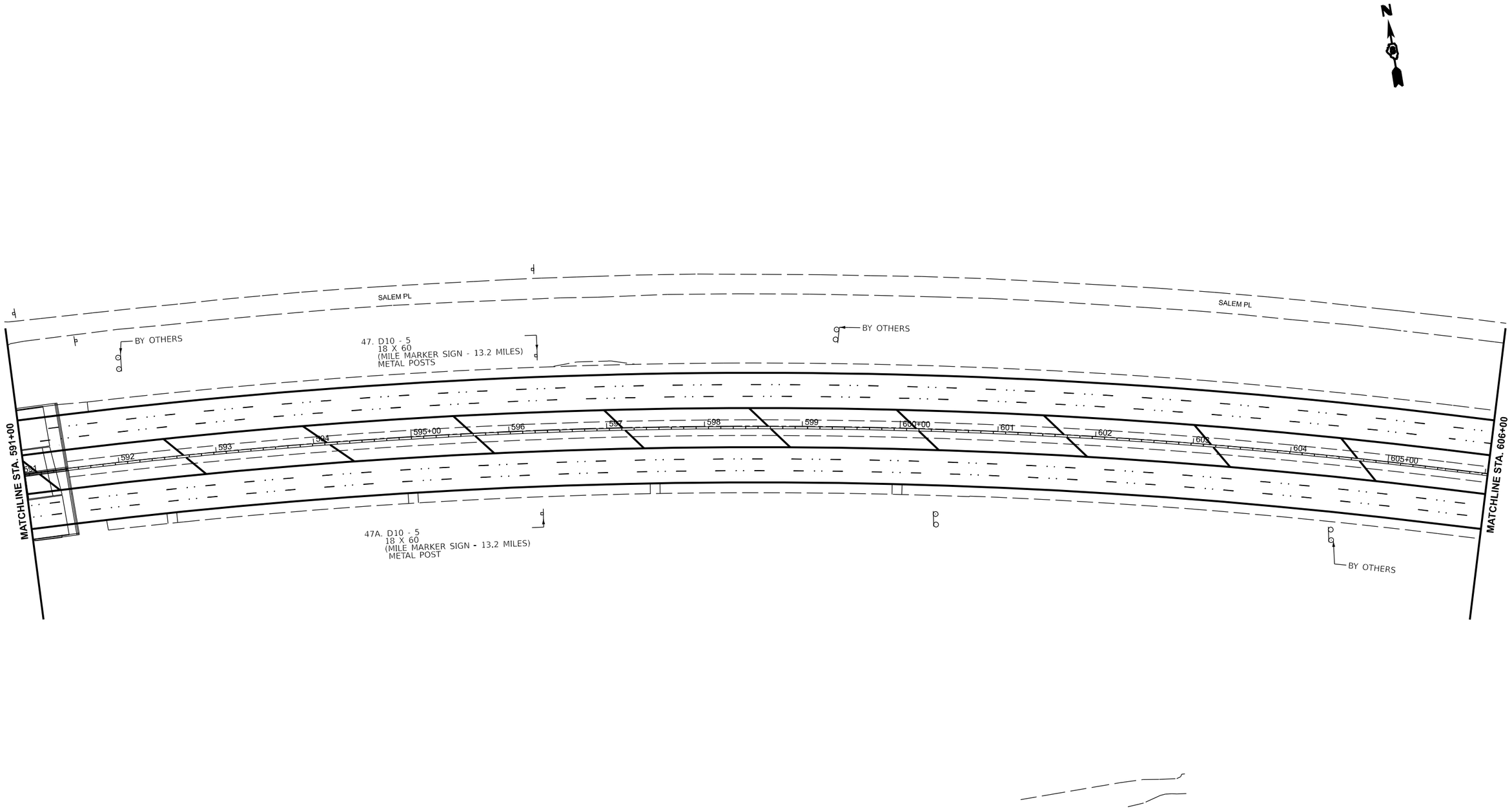

MODEL: EX64 - Plan 18 [Sheet]
FILE NAME: pw://idot-pw.bentley.com:PWIDOT/Documents/IDOT Offices/District 8/ORD Projects/D876R99/CADData/CADsheets/D876R99-sht-plan.dgn

USER NAME = John.P.Green	DESIGNED -	REVISED -	
	DRAWN -	REVISED -	
PLOT SCALE = $SCALE$	CHECKED -	REVISED -	
PLOT DATE = 11/12/2024	DATE -	REVISED -	

STATE OF ILLINOIS
DEPARTMENT OF TRANSPORTATION

MISCELLANEOUS SIGN PLANS

SCALE: | SHEET 18 OF 24 SHEETS | STA. TO STA.

F.A. I. RTE.	SECTION	COUNTY	TOTAL SHEETS	SHEET NO.
64	82-(4,5,6,7)-1RS-2	ST. CLAIR	388	205
		CONTRACT NO. 76R99		
		ILLINOIS	FED. AID PROJECT	

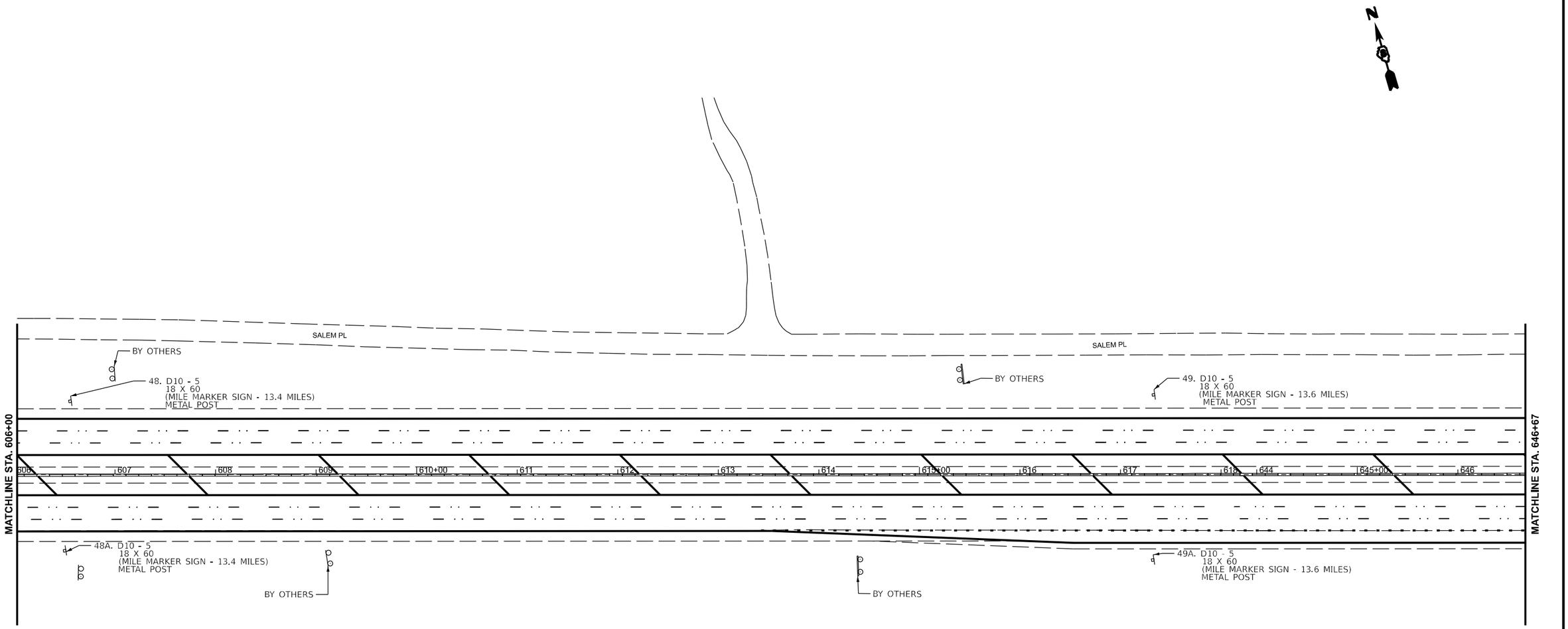

MODEL: EX64 - Plan 19 [Sheet]
FILE NAME: pw:///dot-pw.bentley.com:PWDOT/Documents/IDOT Offices/District 8/ORD Projects/D876R99/CADData/CADsheets/D8T6R99-sht-plan.dgn

USER NAME = John.P.Green	DESIGNED -	REVISED -	
	DRAWN -	REVISED -	
PLOT SCALE = $SCALE$	CHECKED -	REVISED -	
PLOT DATE = 11/12/2024	DATE -	REVISED -	

STATE OF ILLINOIS
DEPARTMENT OF TRANSPORTATION

MISCELLANEOUS SIGN PLANS

SCALE: | SHEET 19 OF 24 SHEETS | STA. | TO STA.

F.A.I. RTE.	SECTION	COUNTY	TOTAL SHEETS	SHEET NO.
64	82-(4,5,6,7)-1RS-2	ST. CLAIR	388	206
		CONTRACT NO. 76R99		
	ILLINOIS FED. AID PROJECT			

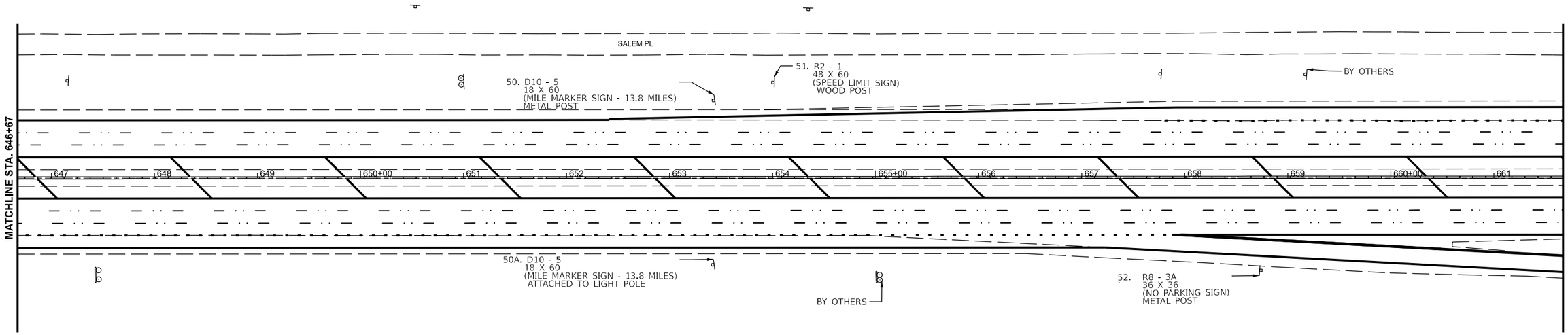

MODEL: EX64 - Plan 20 [Sheet]
FILE NAME: pw:///dot-pw.bentley.com:PWIDOT/Documents/IDOT Offices/District 8/ORD Projects/D876R99/CADData/CADsheets/D8T6R99-sht-plan.dgn

USER NAME = John.P.Green	DESIGNED -	REVISED -	
	DRAWN -	REVISED -	
PLOT SCALE = $SCALE$	CHECKED -	REVISED -	
PLOT DATE = 11/12/2024	DATE -	REVISED -	

STATE OF ILLINOIS
DEPARTMENT OF TRANSPORTATION

MISCELLANEOUS SIGN PLANS

SCALE: | SHEET 20 OF 24 SHEETS | STA. | TO STA.

F.A.I. RTE.	SECTION	COUNTY	TOTAL SHEETS	SHEET NO.
64	82-(4,5,6,7)-1RS-2	ST. CLAIR	388	207
		CONTRACT NO. 76R99		
	ILLINOIS FED. AID PROJECT			

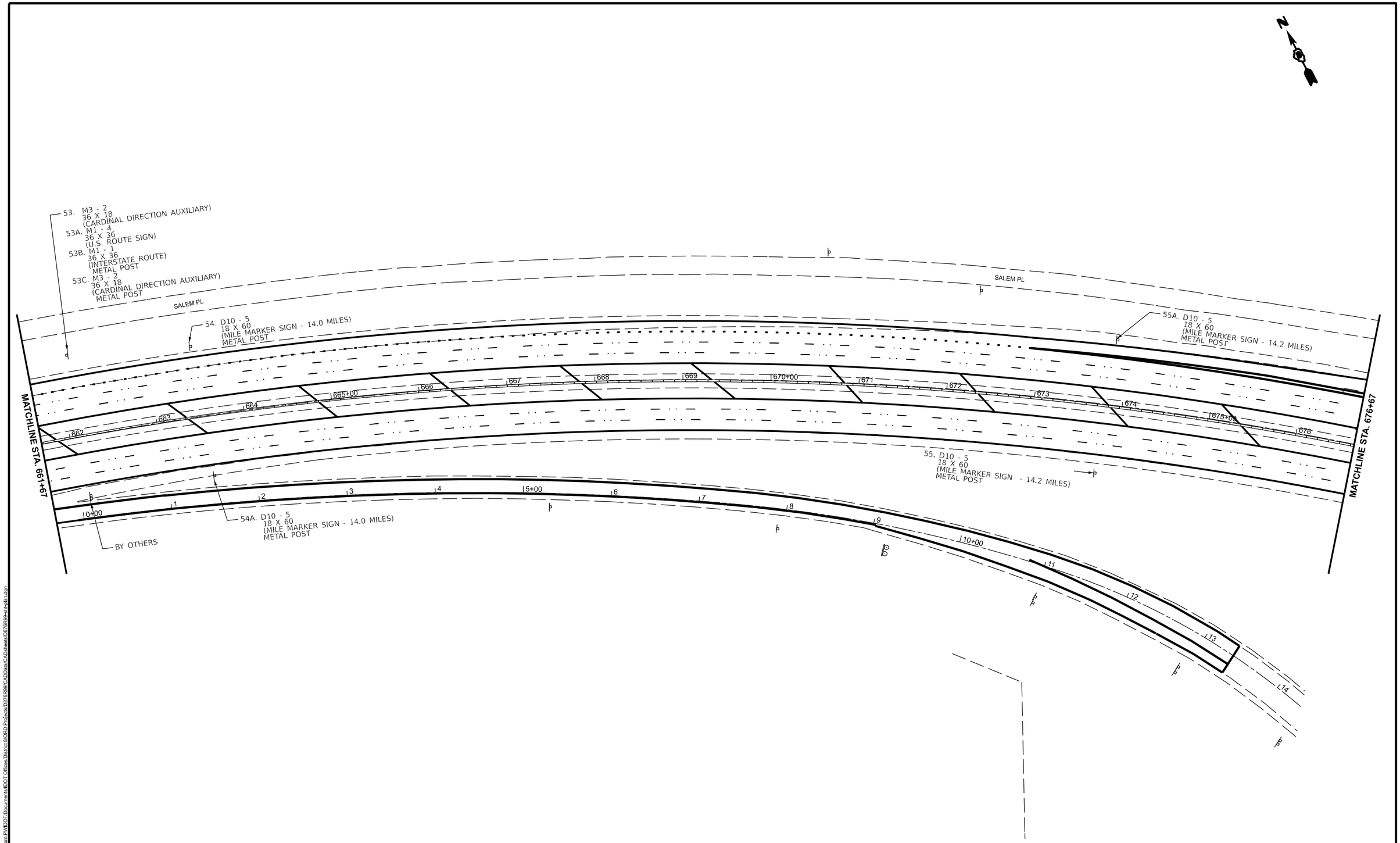

MODEL: EX64 - Plan 21 [Sheet]
FILE NAME: pw://ildot-pw.bentley.com:PWIDOT/Documents/IDOT Offices/District 8/ORD Projects/D876R99/CADData/CADsheets/D876R99-sht-plan.dgn

USER NAME = John.P.Green	DESIGNED -	REVISED -	STATE OF ILLINOIS DEPARTMENT OF TRANSPORTATION
	DRAWN -	REVISED -	
PLOT SCALE = $SCALE$	CHECKED -	REVISED -	
PLOT DATE = 11/12/2024	DATE -	REVISED -	

MISCELLANEOUS SIGN PLANS

SCALE: | SHEET 21 OF 24 SHEETS | STA. | TO STA.

F.A. I. RTE.	SECTION	COUNTY	TOTAL SHEETS	SHEET NO.
64	82-(4,5,6,7)-1RS-2	ST. CLAIR	388	208
		CONTRACT NO. 76R99		
		ILLINOIS	FED. AID PROJECT	

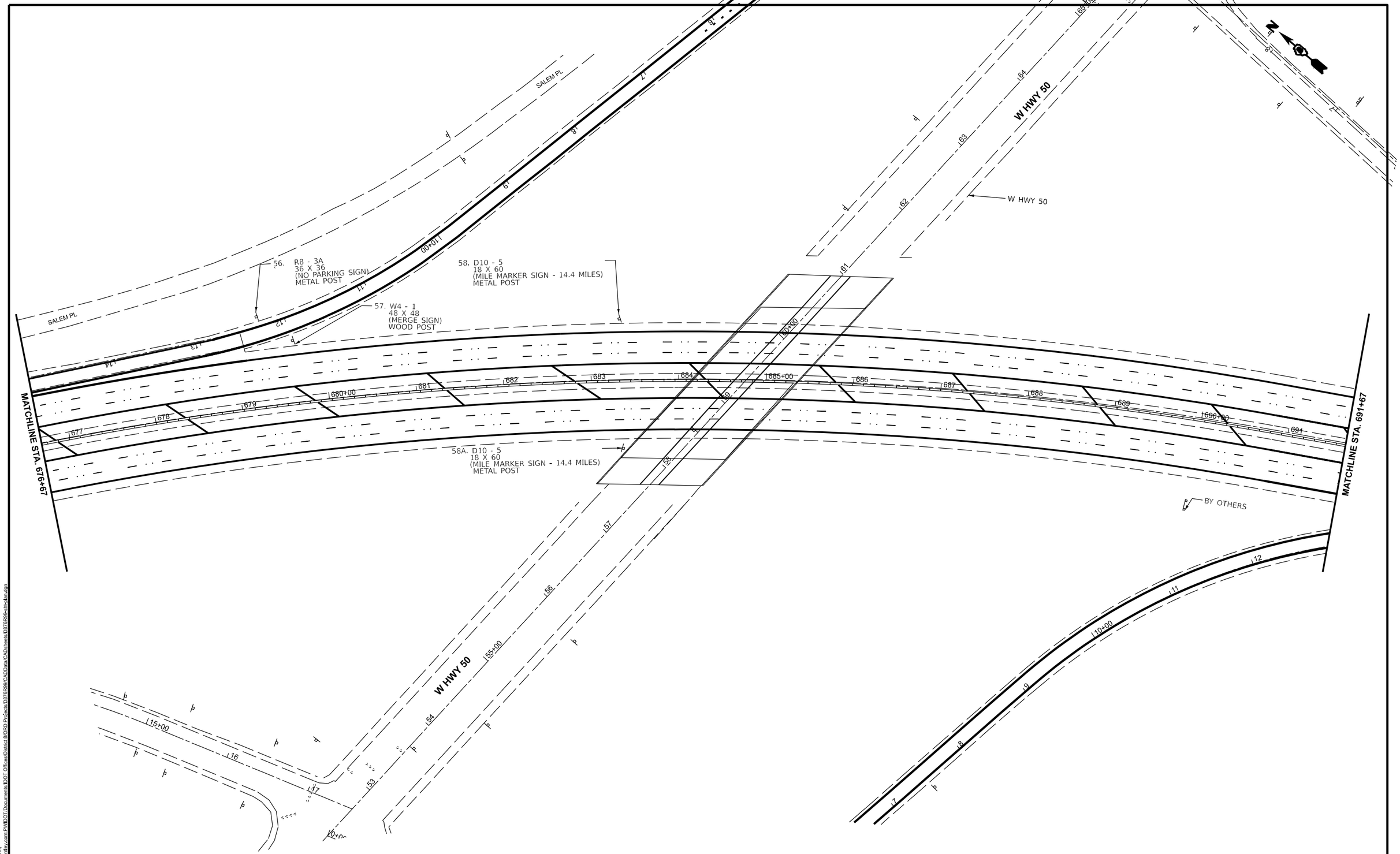
SALEM PL
SALEM PL
W HWY 50
W HWY 50
W HWY 50
56. R8 - 3A
36 X 36
(NO PARKING SIGN)
METAL POST
57. W4 - 1
48 X 48
(MERGE SIGN)
WOOD POST
58. D10 - 5
18 X 60
(MILE MARKER SIGN - 14.4 MILES)
METAL POST
58A. D10 - 5
18 X 60
(MILE MARKER SIGN - 14.4 MILES)
METAL POST
MATCHLINE STA. 676+67
MATCHLINE STA. 691+67
BY OTHERS
110+00
115+00
120+00
125+00
130+00
135+00
140+00
145+00
150+00
155+00
160+00
165+00
170+00
175+00
180+00
185+00
190+00
195+00
200+00
205+00
210+00
215+00
220+00
225+00
230+00
235+00
240+00
245+00
250+00
255+00
260+00
265+00
270+00
275+00
280+00
285+00
290+00
295+00
300+00
305+00

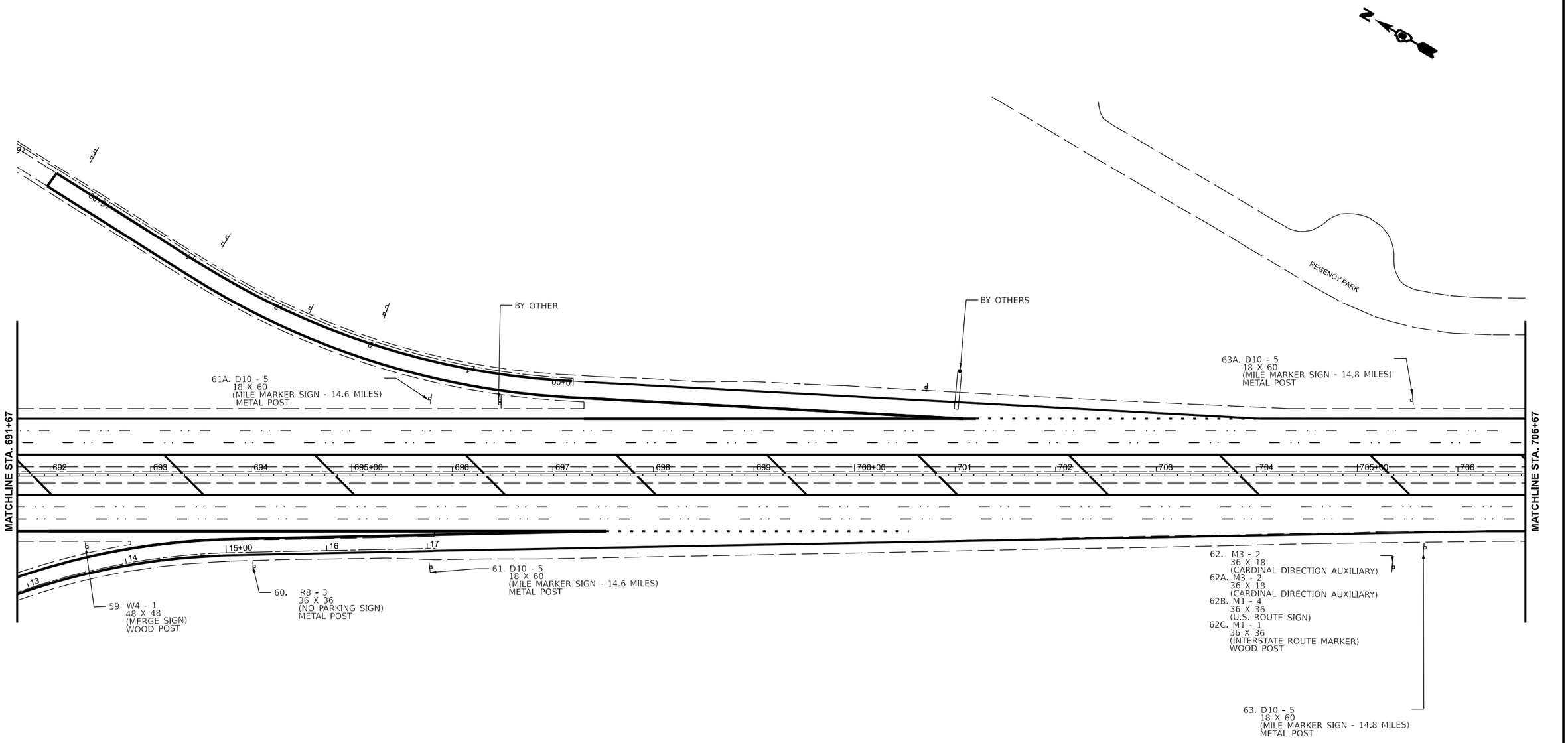

MODEL: EX64 - Plan 23 [Sheet]
FILE NAME: pw:///dot-pw.bentley.com:PWDOT/Documents/IDOT Offices/District 8/ORD Projects/D876R99/CADData/CADsheets/D8T6R99-sht-plan.dgn

USER NAME = John.P.Green	DESIGNED -	REVISED -	
	DRAWN -	REVISED -	
PLOT SCALE = $SCALE$	CHECKED -	REVISED -	
PLOT DATE = 11/12/2024	DATE -	REVISED -	

STATE OF ILLINOIS
DEPARTMENT OF TRANSPORTATION

MISCELLANEOUS SIGN PLANS

SCALE: | SHEET 23 OF 24 SHEETS | STA. | TO STA.

F.A. I. RTE.	SECTION	COUNTY	TOTAL SHEETS	SHEET NO.
64	82-(4,5,6,7)-1RS-2	ST. CLAIR	388	210
		CONTRACT NO. 76R99		
	ILLINOIS FED. AID PROJECT			

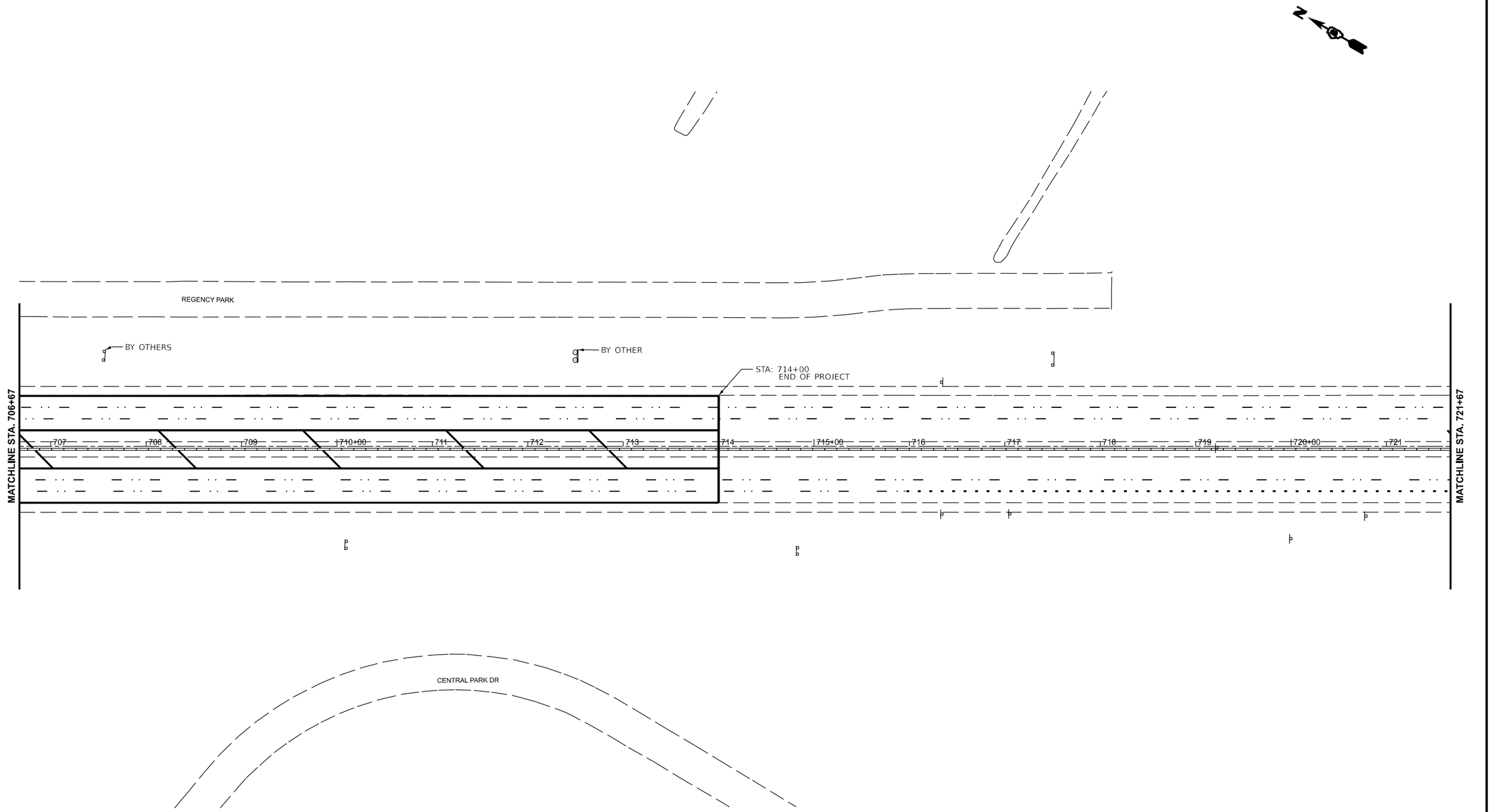

MODEL: EX64 - Plan 24 [Sheet]
FILE NAME: pw://idot-pw.bentley.com:PWIDOT/Documents/IDOT Offices/District 8/ORD Projects/D876R99/CADData/CADsheets/D876R99-sht-plan.dgn

USER NAME = John.P.Green	DESIGNED -	REVISED -	**STATE OF ILLINOIS DEPARTMENT OF TRANSPORTATION**
	DRAWN -	REVISED -	
PLOT SCALE = $SCALE$	CHECKED -	REVISED -	
PLOT DATE = 11/12/2024	DATE -	REVISED -	

MISCELLANEOUS SIGN PLANS

SCALE: | SHEET 24 OF 24 SHEETS | STA. | TO STA.

F.A. I. RTE.	SECTION	COUNTY	TOTAL SHEETS	SHEET NO.
64	82-(4,5,6,7)-1RS-2	ST. CLAIR	388	211
		CONTRACT NO. 76R99		
		ILLINOIS	FED. AID PROJECT	

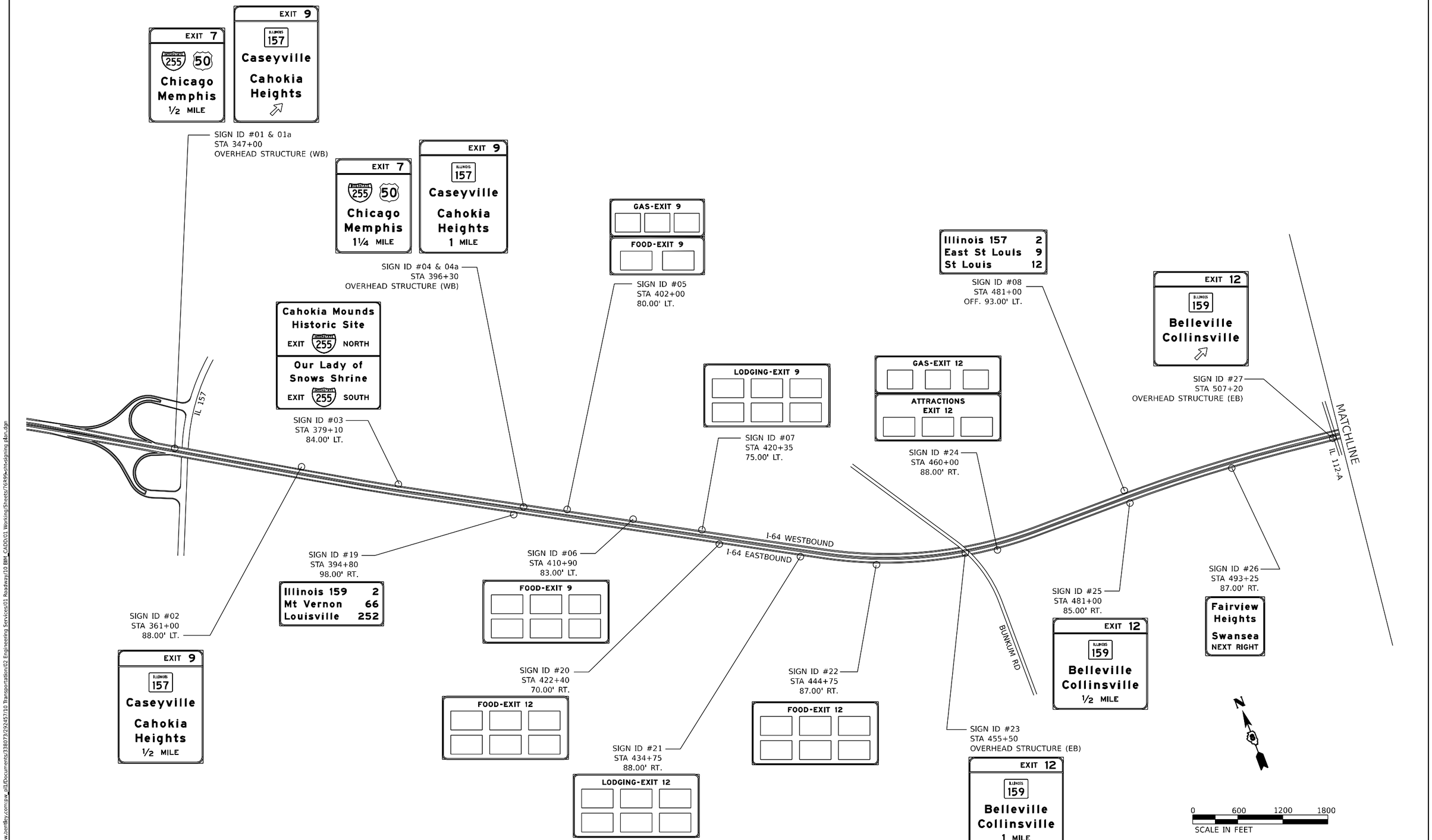

MODEL: Map-1
FILE NAME: pw://cdmsmith-az02-pw.bentley.com:pw_pl1/Documents/338073/292457/10 Transportation/02 Engineering Services/01 Roadway/10 BIM_CADD/01 Working/Sheets/76R99-sht-signing plan.dgn

CDM Smith	USER NAME = PELLOTCA	DESIGNED - CAP	REVISED -	STATE OF ILLINOIS DEPARTMENT OF TRANSPORTATION	SIGNING LOCATION
		DRAWN - CAP	REVISED -		
	PLOT SCALE = 0.16666633 ' / in.	CHECKED - AAC	REVISED -		
	PLOT DATE = 11/13/2024	DATE - 09/09/2024	REVISED -		SCALE: NONE SHEET 212 OF 388 SHEETS STA. TO STA.

F.A.I. RTE.	SECTION	COUNTY	TOTAL SHEETS	SHEET NO.
64	82-(4,5,6,7)-1RS-2	ST. CLAIR	388	212
		CONTRACT NO. 76R99		
		ILLINOIS FED. AID PROJECT		

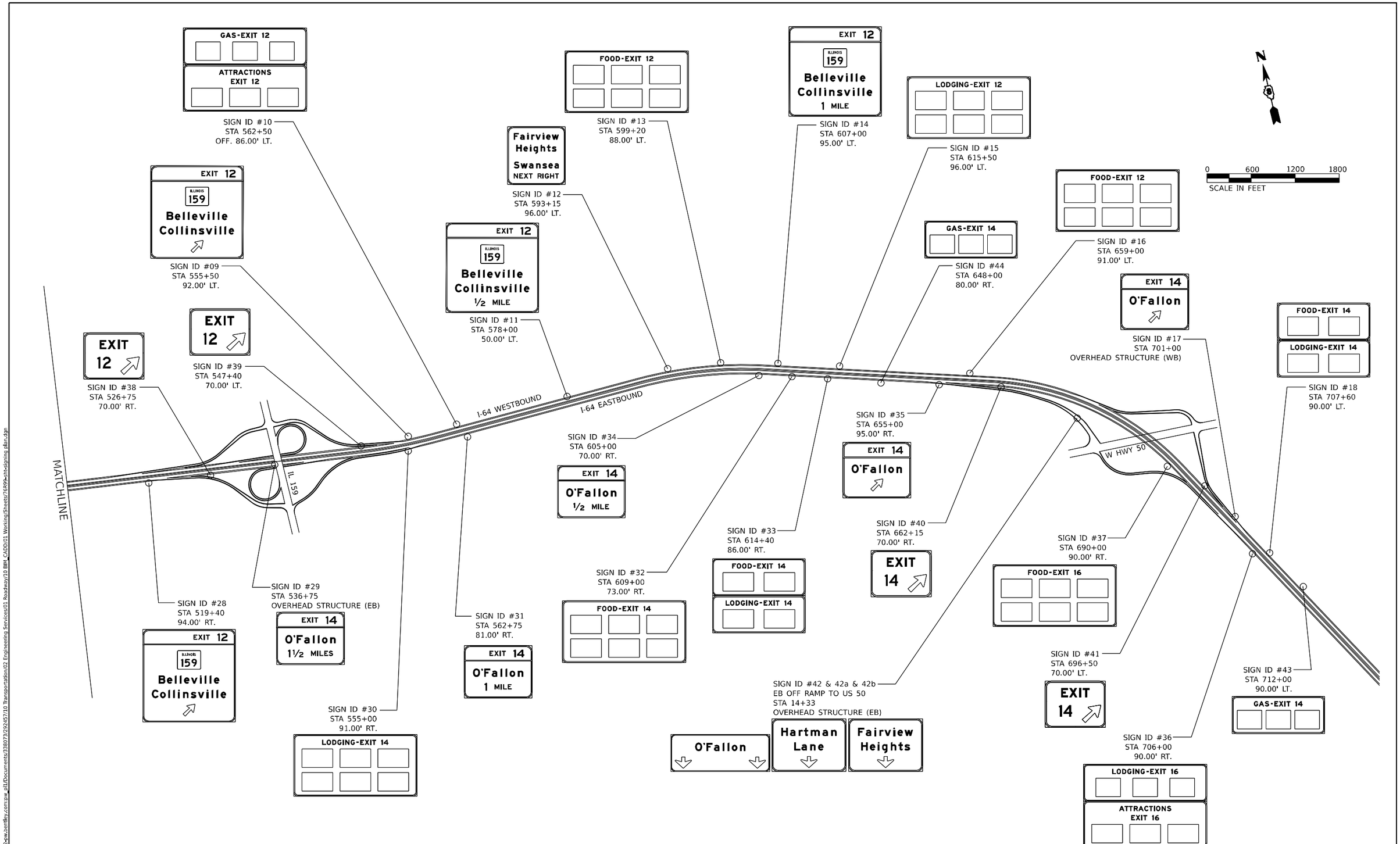

MODEL: Map-2
FILE NAME: pw://cdmsmith-az02-pw.bentley.com:pw_pl1/Documents/338073/292457/10 Transportation/02 Engineering Services/01 Roadway/10 BIM_CADD/01 Working/Sheets/76R99-sht-signing plan.dgn

CDM Smith	USER NAME = PELLOTCA	DESIGNED - CAP	REVISED -	STATE OF ILLINOIS DEPARTMENT OF TRANSPORTATION	SIGNING LOCATION	F.A.I. RTE.	SECTION	COUNTY	TOTAL SHEETS	SHEET NO.
		DRAWN - CAP	REVISED -			64	82-(4,5,6,7)-1RS-2	ST. CLAIR	388	213
	PLOT SCALE = 0.16666633 ' / in.	CHECKED - AAC	REVISED -					CONTRACT NO. 76R99		
	PLOT DATE = 11/13/2024	DATE - 09/09/2024	REVISED -		SCALE: NONE SHEET 213 OF 388 SHEETS STA. TO STA.			ILLINOIS FED. AID PROJECT		







SIGN ID #01 & 01a
STA 347+00 WESTBOUND
STRUCTURE #8S082I064L008.5
(2) EXISTING GUIDE SIGNS ON EXISTING STRUCTURE
(2) PROPOSED GUIDE SIGNS ON EXISTING STRUCTURE

SIGN PANEL REMOVAL - TYPE 3, 405 SF
SIGN PANEL - TYPE 3, 429.75 SF



12.0" Radius, 2.0" Border, White on, Green;
"EXIT", E 2K 120% spacing; "7", E 2K;

12.0" Radius, 2.0" Border, White on, Green;
"Chicago", E Mod 2K; "Memphis", E Mod 2K; "½", E 2K; "MILE", E 2K;
Table of widths and spaces

| | | |

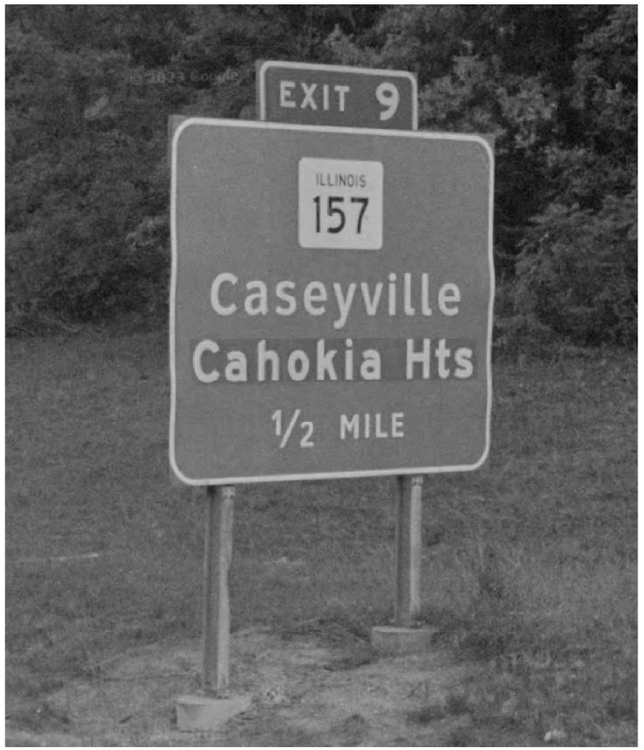

SIGN ID #02
STA 361+00 WESTBOUND
EXISTING GUIDE SIGN ON STRUCTURAL STEEL SIGN SUPPORTS
PROPOSED GUIDE SIGN ON STRUCTURAL STEEL SIGN SUPPORTS

SIGN PANEL REMOVAL - TYPE 3, 185.6 SF
REMOVE GROUND MOUNTED SIGN SUPPORTS - 2 EA
SIGN PANEL - TYPE 3, 243 SF

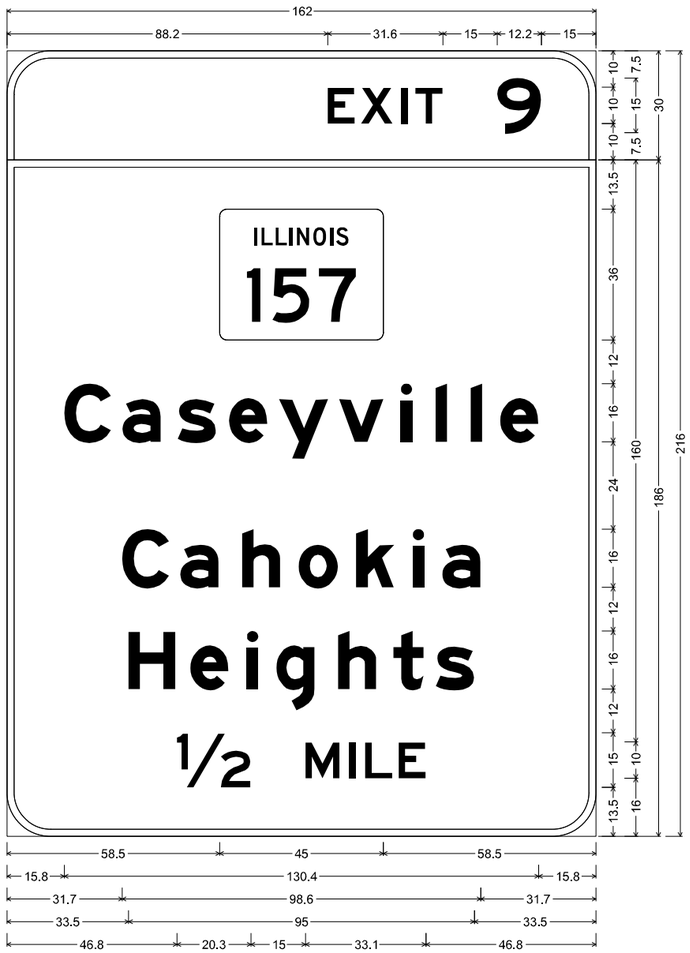

12.0" Radius, 2.0" Border, White on, Green;
"EXIT", E 2K 120% spacing; "9", E 2K;

12.0" Radius, 2.0" Border, White on, Green;
IL 157; "Caseyville", E Mod 2K; "Cahokia", E Mod 2K; "Heights", E Mod 2K; "1/2", E 2K;
"MILE", E 2K;
Table of widths and spaces

88.2	E 7.5	1.7	X 8.7	2.4	I 1.8	2.0	T 7.5	15.0	9 12.2	15.0

58.5	157 45.0	58.5

15.8	C 13.0	3.0	a 10.6	4.6	s 10.6	3.5	e 10.5	3.2	y 13.6	2.9	v 12.3	4.7	l 3.2	6.4	l 3.2	6.4	l 3.2	4.9	e 10.6	15.8

31.7	C 13.0	3.0	a 10.6	6.4	h 10.5	5.0	o 10.9	4.9	k 10.6	5.0	i 3.2	4.9	a 10.6	31.7

33.5	H 12.9	4.0	e 10.6	5.0	i 3.2	4.9	g 10.6	6.4	h 10.5	4.7	t 8.3	3.4	s 10.5	33.5

46.8	1/2 20.3	15.0	M 9.4	2.6	I 1.8	2.6	L 7.5	1.7	E 7.5	46.8

MODEL: Sheet-3
FILE NAME: pw://cdmsmith-az02-pw.bentley.com:pw_pl1/Documents/338073/292457/10 Transportation/02 Engineering Services/01 Roadway/10 BIM_CADD/01 Working/Sheets/76R99-sht-details_signing panels.dgn

CDM Smith

USER NAME = PELLOTCA	DESIGNED - CAP	REVISED -	
	DRAWN - CAP	REVISED -	
PLOT SCALE = 0.16666633 ' / in.	CHECKED - AAC	REVISED -	
PLOT DATE = 11/13/2024	DATE - 09/09/2024	REVISED -	

STATE OF ILLINOIS
DEPARTMENT OF TRANSPORTATION

SIGNING PLANS

SCALE: NONE | SHEET 215 OF 388 SHEETS | STA. | TO STA.

F.A.I. RTE.	SECTION	COUNTY	TOTAL SHEETS	SHEET NO.
64	82-(4,5,6,7)-1RS-2	ST. CLAIR	388	215
		CONTRACT NO. 76R99		
		ILLINOIS	FED. AID PROJECT	



SIGN ID #03
STA 379+10 WESTBOUND
EXISTING GUIDE SIGN ON STRUCTURAL STEEL SIGN SUPPORTS
PROPOSED GUIDE SIGN ON STRUCTURAL STEEL SIGN SUPPORTS

SIGN PANEL REMOVAL - TYPE 3, 274.3 SF
REMOVE GROUND MOUNTED SIGN SUPPORTS - 2 EA
SIGN PANEL - TYPE 3, 280.5 SF



9.0" Radius, 1.5" Border, White on, Brown;
"Cahokia Mounds", E Mod 2K; "Historic Site", E Mod 2K; "EXIT", E 2K; "NORTH", E 2K;

9.0" Radius, 1.5" Border, White on, Brown;
"Our Lady of", E Mod 2K; "Snows Shrine", E Mod 2K; "EXIT", E 2K; "SOUTH", E 2K;
Table of widths and spaces

| | | |







SIGN ID #04 & 04a
STA 396+30 WESTBOUND
STRUCTURE #8S082I064L009.4
(2) EXISTING GUIDE SIGNS ON EXISTING STRUCTURE
(2) PROPOSED GUIDE SIGNS ON EXISTING STRUCTURE

SIGN PANEL REMOVAL - TYPE 3, 356 SF
SIGN PANEL - TYPE 3, 432 SF



12.0" Radius, 2.0" Border, White on, Green;
"EXIT", E 2K 120% spacing; "7", E 2K;

12.0" Radius, 2.0" Border, White on, Green;
"Chicago", E Mod 2K; "Memphis", E Mod 2K; "1¼", E 2K; "MILE", E 2K;
Table of widths and spaces

| | | |



SIGN ID #05
STA 402+00 WESTBOUND
EXISTING GUIDE SIGN ON STRUCTURAL STEEL SIGN SUPPORTS
PROPOSED GUIDE SIGN ON STRUCTURAL STEEL SIGN SUPPORTS

SIGN PANEL REMOVAL - TYPE 3, 195.7 SF
REMOVE GROUND MOUNTED SIGN SUPPORTS - 2 EA
SIGN PANEL - TYPE 3, 180 SF

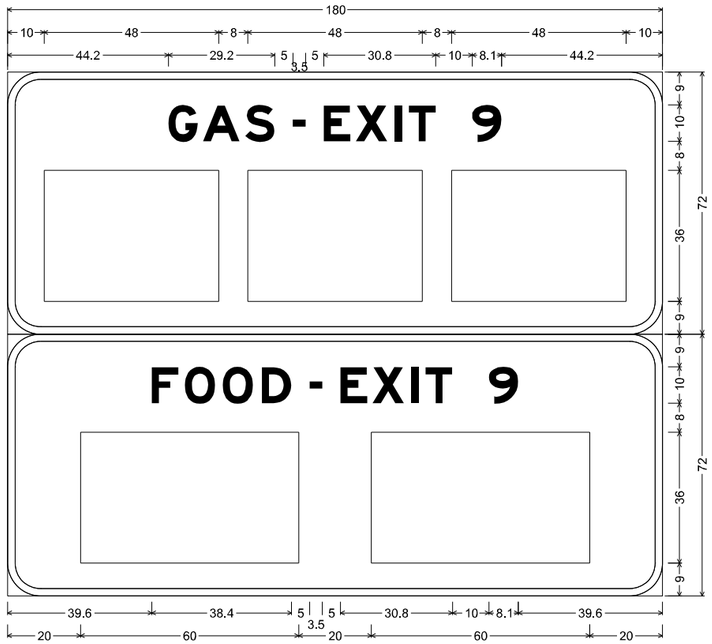

9.0" Radius, 2.0" Border, White on, Blue;
"GAS", E Mod 2K; "-", E Mod 2K; "EXIT 9", E Mod 2K;

9.0" Radius, 2.0" Border, White on, Blue;
"FOOD", E Mod 2K; "-", E Mod 2K; "EXIT 9", E Mod 2K;
Table of widths and spaces

44.2	G 8.1	1.4	A 10.1	1.5	S 8.1	5.0	- 3.5	5.0	E 7.4	1.4	X 8.7	2.1	I 2.0	1.8	T 7.4	10.0	9 8.1	44.2		
10.0	□ 48.0	8.0	□ 48.0	8.0	□ 48.0	10.0														
39.6	F 7.4	1.7	O 8.4	2.0	O 8.4	2.4	D 8.1	5.0	- 3.5	5.0	E 7.4	1.4	X 8.7	2.1	I 2.0	1.8	T 7.4	10.0	9 8.1	39.6
20.0	□ 60.0	20.0	□ 60.0	20.0																



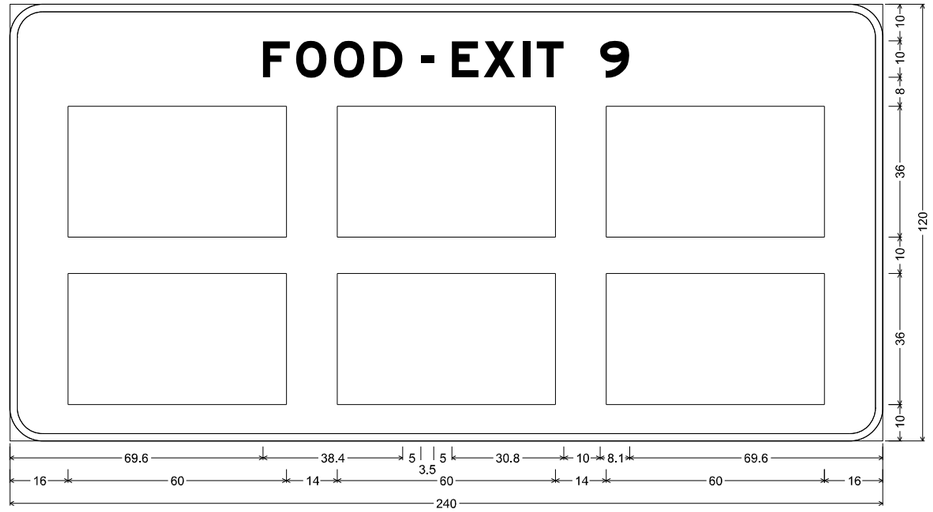

9.0" Radius, 2.0" Border, White on, Blue;
"FOOD", E Mod 2K; "-", E Mod 2K; "EXIT 9", E Mod 2K;
Table of widths and spaces

	F		O		O		D		-		E		X		I		T		9	
69.6	7.4	1.7	8.4	2.0	8.4	2.4	8.1	5.0	3.5	5.0	7.4	1.4	8.7	2.1	2.0	1.8	7.4	10.0	8.1	69.6

16.0	60.0	14.0	60.0	14.0	60.0	16.0
16.0	60.0	14.0	60.0	14.0	60.0	16.0

SIGN ID #06
STA 410+90 WESTBOUND
EXISTING GUIDE SIGN ON STRUCTURAL STEEL SIGN SUPPORTS
PROPOSED GUIDE SIGN ON STRUCTURAL STEEL SIGN SUPPORTS

SIGN PANEL REMOVAL - TYPE 3, 200 SF
REMOVE GROUND MOUNTED SIGN SUPPORTS - 2 EA
SIGN PANEL - TYPE 3, 200 SF

MODEL: Sheet-7
FILE NAME: pw://cdmsmith-az02-pw.bentley.com:pw_pl1/Documents/338073/292457/10 Transportation/02 Engineering Services/01 Roadway/10 BIM_CADD/01 Working/Sheets/76R99-sht-details_signing panels.dgn

CDM Smith	USER NAME = PELLOTCA	DESIGNED - CAP	REVISED -	STATE OF ILLINOIS DEPARTMENT OF TRANSPORTATION	SIGNING PLANS	F.A.I. RTE. 64	SECTION 82-(4,5,6,7)-1RS-2	COUNTY ST. CLAIR	TOTAL SHEETS 388	SHEET NO. 219
		DRAWN - CAP	REVISED -					CONTRACT NO. 76R99		
	PLOT SCALE = 0.16666633 ' / in.	CHECKED - AAC	REVISED -							
	PLOT DATE = 11/13/2024	DATE - 09/09/2024	REVISED -		SCALE: NONE SHEET 219 OF 388 SHEETS STA. TO STA.		ILLINOIS FED. AID PROJECT			

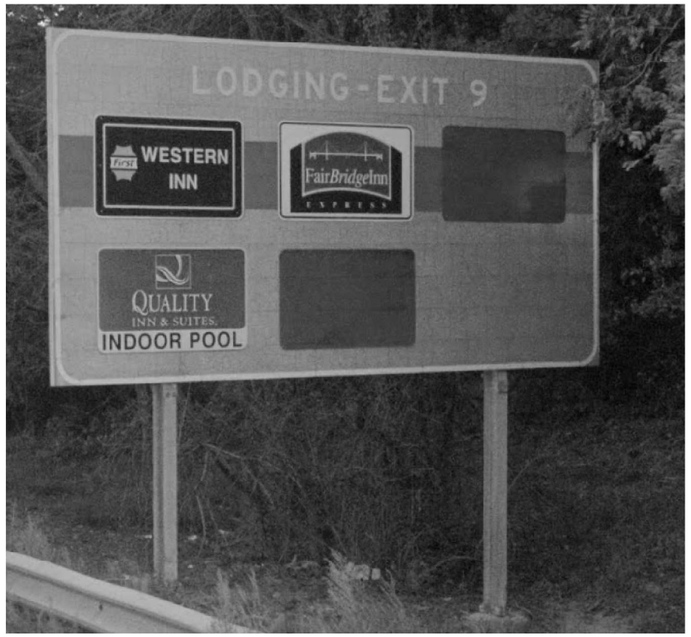

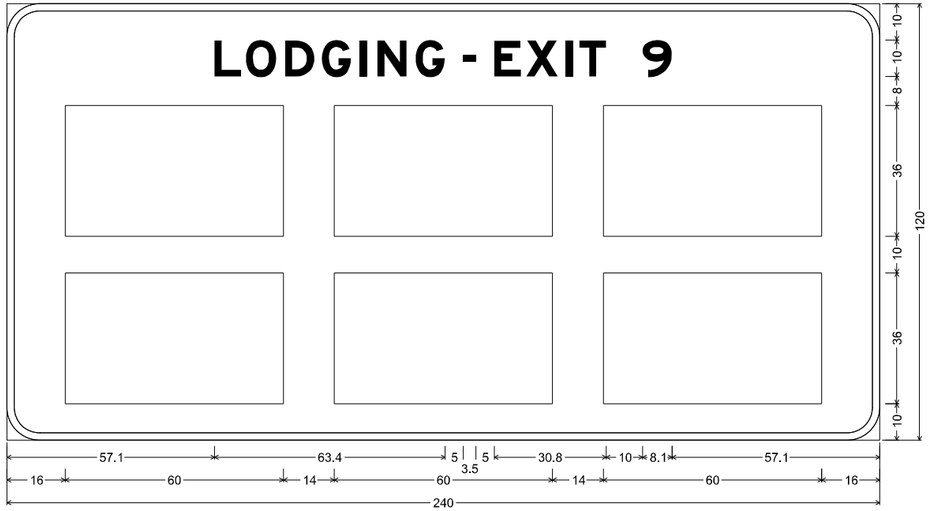

9.0" Radius, 2.0" Border, White on, Blue;
"LODGING", E Mod 2K; "-", E Mod 2K; "EXIT 9", E Mod 2K;
Table of widths and spaces

	L		O		D		G		I		N		G		-		E		X		I		T		9	
57.1	7.4	1.2	8.4	2.4	8.1	2.0	8.1	2.4	2.0	2.8	8.1	2.4	8.1	5.0	3.5	5.0	7.4	1.4	8.7	2.1	2.0	1.8	7.4	10.0	8.1	57.1

16.0	60.0	14.0	60.0	14.0	60.0	16.0
16.0	60.0	14.0	60.0	14.0	60.0	16.0

SIGN ID #07
STA 420+35 WESTBOUND
EXISTING GUIDE SIGN ON STRUCTURAL STEEL SIGN SUPPORTS
PROPOSED GUIDE SIGN ON STRUCTURAL STEEL SIGN SUPPORTS

SIGN PANEL REMOVAL - TYPE 3, 187.7 SF
REMOVE GROUND MOUNTED SIGN SUPPORTS - 2 EA
SIGN PANEL - TYPE 3, 200 SF

MODEL: Sheet-8
FILE NAME: pw://cdmsmith-az02-pw.bentley.com:pw_pl1/Documents/338073/292457/10 Transportation/02 Engineering Services/01 Roadway/10 BIM_CADD/01 Working/Sheets/76R99-sht-details_signing panels.dgn

CDM Smith

USER NAME = PELLOTCA	DESIGNED - CAP	REVISED -	
	DRAWN - CAP	REVISED -	
PLOT SCALE = 0.16666633 ' / in.	CHECKED - AAC	REVISED -	
PLOT DATE = 11/13/2024	DATE - 09/09/2024	REVISED -	

STATE OF ILLINOIS
DEPARTMENT OF TRANSPORTATION

SIGNING PLANS

SCALE: NONE | SHEET 220 OF 388 SHEETS | STA. | TO STA.

F.A.I. RTE.	SECTION	COUNTY	TOTAL SHEETS	SHEET NO.
64	82-(4,5,6,7)-1RS-2	ST. CLAIR	388	220

CONTRACT NO. 76R99

ILLINOIS | FED. AID PROJECT



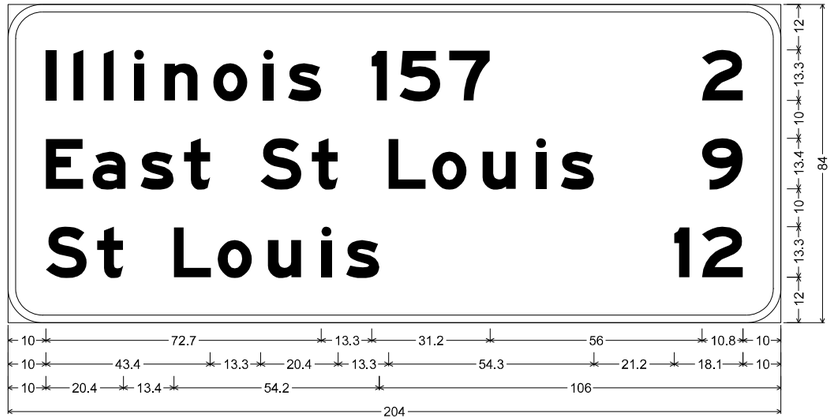

9.0" Radius, 2.0" Border, White on, Green;
"Illinois 157", E Mod 2K; "East St Louis", E Mod 2K; "St Louis", E Mod 2K; "2", E Mod 2K; "9", E Mod 2K; "12", E Mod 2K;

Table of widths and spaces

10.0	l 2.7	4.5	l 2.7	5.3	l 2.7	5.3	i 2.7	5.3	n 8.8	4.2	o 9.0	4.2	i 2.6	3.9	s 8.8	13.3	1 4.0	3.4	5 10.8	2.2	7 10.8	56.0	2 10.8	10.0
10.0	E 9.9	2.4	a 8.8	3.9	s 8.8	2.6	t 7.0	13.3	S 10.8	2.7	t 6.9	13.3	L 9.9	1.7	o 9.1	4.1	u 8.8	5.4	i 2.6	3.9	s 8.8	28.5	9 10.8	10.0
10.0	S 10.8	2.7	t 6.9	13.4	L 9.8	1.8	o 9.0	4.2	u 8.8	5.3	l 2.7	3.8	s 8.8	77.9	1 4.0	3.3	2 10.8	10.0						

SIGN ID #08
STA 481+00 WESTBOUND
EXISTING GUIDE SIGN ON STRUCTURAL STEEL SIGN SUPPORTS
PROPOSED GUIDE SIGN ON STRUCTURAL STEEL SIGN SUPPORTS

SIGN PANEL REMOVAL - TYPE 3, 111.6 SF
REMOVE GROUND MOUNTED SIGN SUPPORTS - 2 EA
SIGN PANEL - TYPE 3, 119 SF

MODEL: Sheet-9
FILE NAME: pw://cdmsmith-az02-pw.bentley.com:pw_pl1/Documents/338073/29245710 Transportation/02 Engineering Services/01 Roadway/10 BIM_CADD/01 Working/Sheets/76R99-sht-details_signing panels.dgn

CDM Smith

USER NAME = PELLOTCA	DESIGNED - CAP	REVISED -	
	DRAWN - CAP	REVISED -	
PLOT SCALE = 0.16666633 ' / in.	CHECKED - AAC	REVISED -	
PLOT DATE = 11/13/2024	DATE - 09/09/2024	REVISED -	

STATE OF ILLINOIS
DEPARTMENT OF TRANSPORTATION

SIGNING PLANS

SCALE: NONE | SHEET 221 OF 388 SHEETS | STA. | TO STA.

F.A.I. RTE.	SECTION	COUNTY	TOTAL SHEETS	SHEET NO.
64	82-(4,5,6,7)-1RS-2	ST. CLAIR	388	221

CONTRACT NO. 76R99
ILLINOIS FED. AID PROJECT



SIGN ID #09
STA 555+50 WESTBOUND
EXISTING GUIDE SIGN ON STRUCTURAL STEEL SIGN SUPPORTS
PROPOSED GUIDE SIGN ON STRUCTURAL STEEL SIGN SUPPORTS

SIGN PANEL REMOVAL - TYPE 3, 215.9 SF
REMOVE GROUND MOUNTED SIGN SUPPORTS - 2 EA
SIGN PANEL - TYPE 3, 225 SF

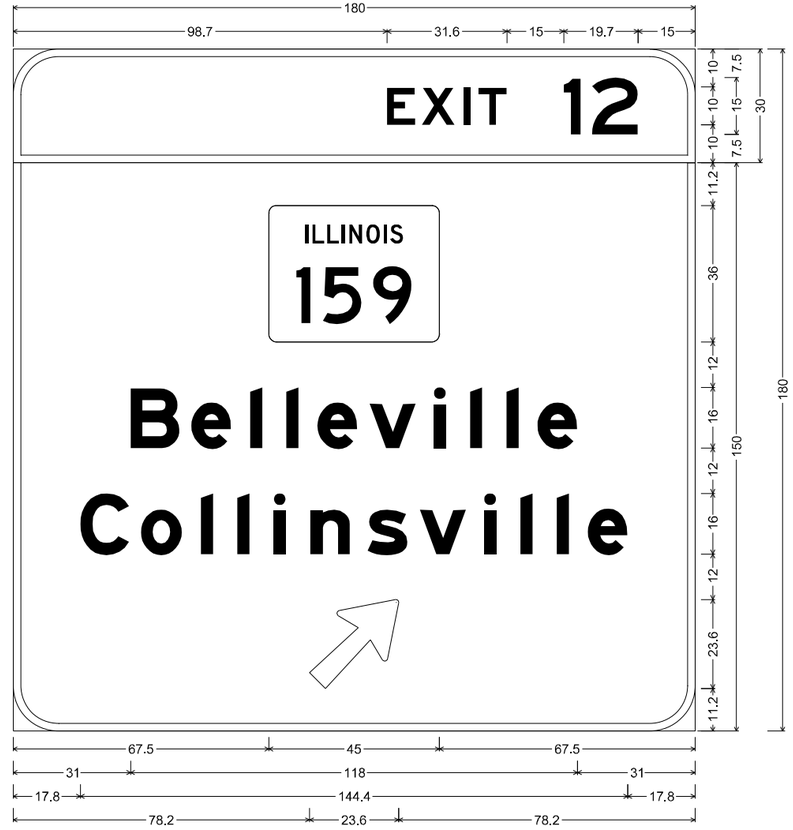

12.0" Radius, 2.0" Border, White on, Green;
"EXIT", E 2K 120% spacing; "12", E 2K;

12.0" Radius, 2.0" Border, White on, Green;
"Belleville", E Mod 2K; "Collinsville", E Mod 2K; Arrow 133 - 30.0" 45';
Table of widths and spaces

98.7	E 7.5	1.7	X 8.7	2.4	I 1.8	2.0	T 7.5	15.0	1 4.5	3.0	2 12.2	15.0

67.5	45.0	67.5

31.0	B 13.0	3.0	e 10.6	5.0	l 3.2	6.4	l 3.2	4.9	e 10.6	3.2	v 12.3	4.6	l 3.2	6.4	l 3.2	6.4	l 3.2	5.0	e 10.6	31.0				

17.8	C 12.9	3.1	o 10.8	5.0	l 3.2	6.4	l 3.2	6.4	i 3.2	6.4	n 10.6	4.6	s 10.6	3.2	v 12.3	4.6	i 3.2	6.4	l 3.2	6.4	l 3.2	5.0	e 10.5	17.8

78.2	23.6	78.2

MODEL: Sheet<10
FILE NAME: pw://cdmsmith-as02-ew.sentry.com:pw_p11/Documents/338073/2924571/10 Transportation/02 Engineering Services/01 Roadway/10 BIM_CADD/01 Working/Sheets/76R99-sht-details_signing panels.dgn

CDM Smith

USER NAME = PELLOTCA	DESIGNED - CAP	REVISED -	**STATE OF ILLINOIS**	**SIGNING PLANS**	
	DRAWN - CAP	REVISED -	**DEPARTMENT OF TRANSPORTATION**		
PLOT SCALE = 0.16666633 ' / in.	CHECKED - AAC	REVISED -		SCALE: NONE	SHEET 222 OF 388 SHEETS STA. TO STA.
PLOT DATE = 11/13/2024	DATE - 09/09/2024	REVISED -			

F.A.I. RTE.	SECTION	COUNTY	TOTAL SHEETS	SHEET NO.
64	82-(4,5,6,7)-1RS-2	ST. CLAIR	388	222
		CONTRACT NO. 76R99		
	ILLINOIS FED. AID PROJECT			



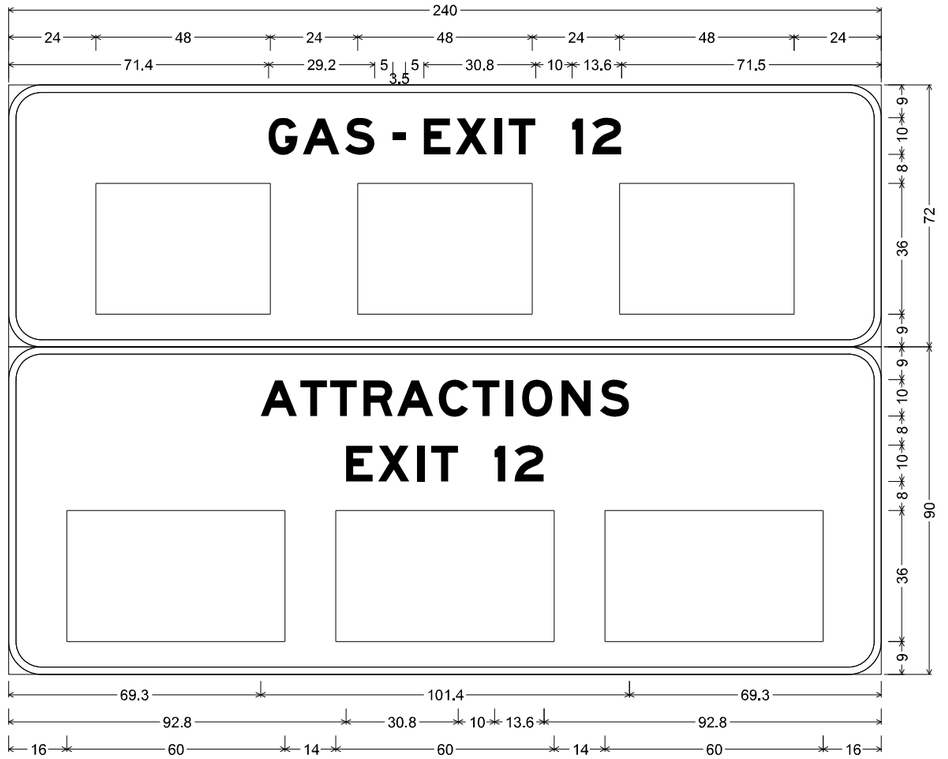

9.0" Radius, 2.0" Border, White on, Blue;
"GAS", E Mod 2K; "-", E Mod 2K; "EXIT 12", E Mod 2K;

9.0" Radius, 2.0" Border, White on, Blue;
"ATTRACTIONS", E Mod 2K; "EXIT 12", E Mod 2K;
Table of widths and spaces

71.4	G 8.1	1.4	A 10.1	1.5	S 8.1	5.0	- 3.5	5.0	E 7.4	1.4	X 8.7	2.1	I 2.0	1.8	T 7.4	10.0	1 3.0	2.5	2 8.1	71.5		
24.0	□ 48.0	24.0	□ 48.0	24.0	□ 48.0	24.0																
69.3	A 10.1	0.8	T 7.4	0.8	T 7.4	1.8	R 8.1	1.1	A 10.1	1.4	C 8.1	1.2	T 7.4	1.8	I 2.0	2.4	O 8.4	2.4	N 8.1	2.5	S 8.1	69.3
92.8	E 7.4	1.4	X 8.7	2.1	I 2.0	1.8	T 7.4	10.0	1 3.0	2.5	2 8.1	92.8										
16.0	□ 60.0	14.0	□ 60.0	14.0	□ 60.0	16.0																

SIGN ID #10
STA 562+50 WESTBOUND
EXISTING GUIDE SIGN ON STRUCTURAL STEEL SIGN SUPPORTS
PROPOSED GUIDE SIGN ON STRUCTURAL STEEL SIGN SUPPORTS

SIGN PANEL REMOVAL - TYPE 3, 282.5 SF
REMOVE GROUND MOUNTED SIGN SUPPORTS - 2 EA
SIGN PANEL - TYPE 3, 270 SF

MODEL: Sheet-11
FILE NAME: pw://cdmsmith-az02-pw.bentley.com:pw_pl1/Documents/338073/292457/10 Transportation/02 Engineering Services/01 Roadway/10 BIM_CADD/01 Working/Sheets/76R99-sht-details_signing panels.dgn



SIGN ID #11
STA 578+00 WESTBOUND
STRUCTURE #8C082I064L012.9
EXISTING GUIDE SIGN ON EXISTING STRUCTURE
PROPOSED GUIDE SIGN ON EXISTING STRUCTURE

SIGN PANEL REMOVAL - TYPE 3, 205.2 SF
SIGN PANEL - TYPE 3, 217.5 SF

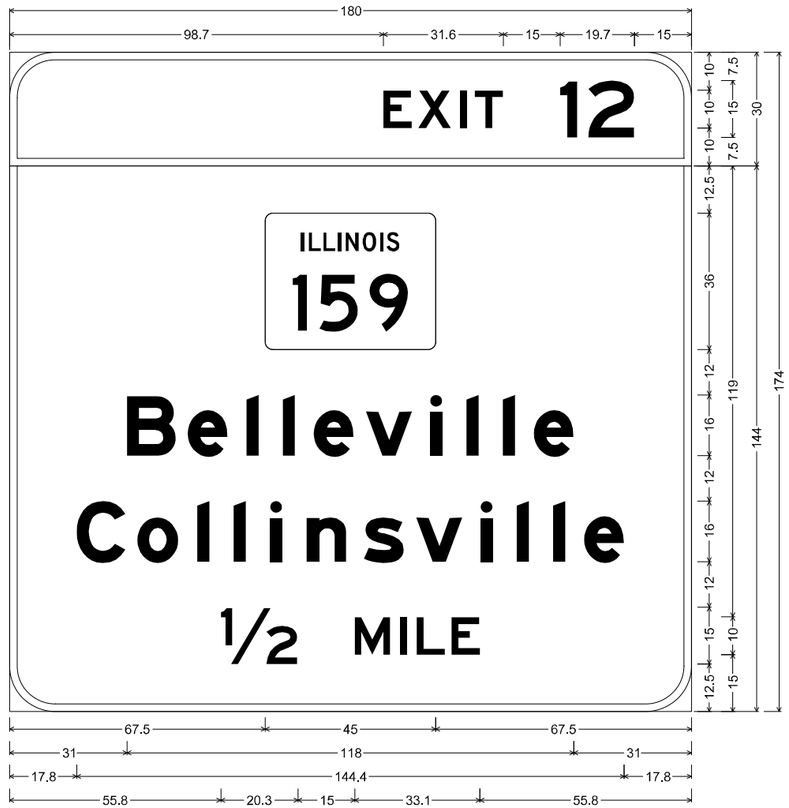

12.0" Radius, 2.0" Border, White on, Green;
"EXIT", E 2K 120% spacing; "12", E 2K;

12.0" Radius, 2.0" Border, White on, Green;
"Belleville", E Mod 2K; "Collinsville", E Mod 2K; "½", E 2K; "MILE", E 2K;
Table of widths and spaces

| | | |



SIGN ID #12
STA 593+15 WESTBOUND
EXISTING GUIDE SIGN ON STRUCTURAL STEEL SIGN SUPPORTS
PROPOSED GUIDE SIGN ON STRUCTURAL STEEL SIGN SUPPORTS

SIGN PANEL REMOVAL - TYPE 3, 150.4 SF
REMOVE GROUND MOUNTED SIGN SUPPORTS - 2 EA
SIGN PANEL - TYPE 3, 90.25 SF

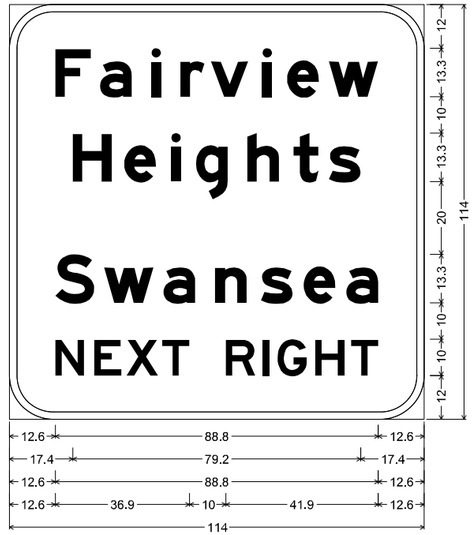

12.0" Radius, 2.0" Border, White on, Green;
"Fairview", E Mod 2K; "Heights", E Mod 2K;
"Swansea", E Mod 2K; "NEXT RIGHT", E 2K;
Table of widths and spaces

12.6	**F** 9.9	2.4	**a** 8.8	5.3	**i** 2.7	5.3	**r** 6.7	1.7	**v** 10.3	3.8	**l** 2.7	4.1	**e** 8.8	2.7	**w** 13.6	12.6								
17.4	**H** 10.8	3.3	**e** 8.8	4.2	**i** 2.6	4.2	**g** 8.8	5.3	**h** 8.8	3.9	**t** 6.9	2.8	**s** 8.8	17.4										
12.6	**S** 10.8	2.7	**w** 13.6	2.6	**a** 8.8	5.4	**n** 8.8	3.8	**s** 8.8	3.0	**e** 8.8	2.9	**a** 8.8	12.6										
12.6	**N** 8.1	2.6	**E** 7.5	1.4	**X** 8.7	1.1	**T** 7.5																	
10.0	**R** 8.1	2.0	**I** 1.8	2.3	**G** 8.1	2.3	**H** 8.1	1.7	**T** 7.5	12.6														

MODEL: Sheet-13
FILE NAME: pw://cdmsmith-as02-ew.bentley.com:aw_o1\Documents\338073\2924577\10 Transportation\02 Engineering Services\01 Roadway\10 BIM_CADD\01 Working\Sheets\76R99-sht-details_signing panels.dgn

CDM Smith

USER NAME = PELLOTCA	DESIGNED - CAP	REVISED -	**STATE OF ILLINOIS**	**SIGNING PLANS**
	DRAWN - CAP	REVISED -	**DEPARTMENT OF TRANSPORTATION**	
PLOT SCALE = 0.16666633 ' / in.	CHECKED - AAC	REVISED -		SCALE: NONE | SHEET 225 OF 388 SHEETS | STA. | TO STA.
PLOT DATE = 11/13/2024	DATE - 09/09/2024	REVISED -		

F.A.I. RTE.	SECTION	COUNTY	TOTAL SHEETS	SHEET NO.
64	82-(4,5,6,7)-1RS-2	ST. CLAIR	388	225
		CONTRACT NO. 76R99		
	ILLINOIS	FED. AID PROJECT		



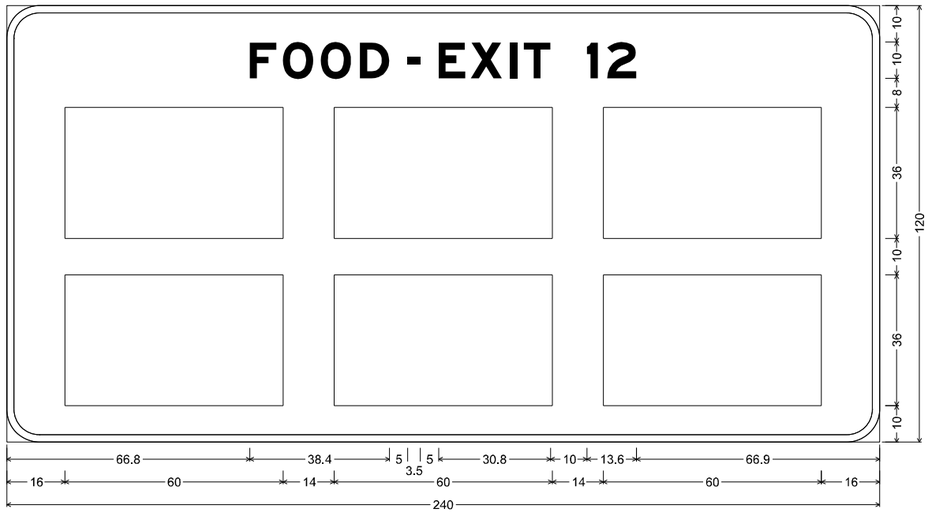

9.0" Radius, 2.0" Border, White on, Blue;
"FOOD", E Mod 2K; "-", E Mod 2K; "EXIT 12", E Mod 2K;
Table of widths and spaces

	F		O		O		D		-		E		X		I		T		1		2	
66.8	7.4	1.7	8.4	2.0	8.4	2.4	8.1	5.0	3.5	5.0	7.4	1.4	8.7	2.1	2.0	1.8	7.4	10.0	3.0	2.5	8.1	66.9

16.0	▭ 60.0	14.0	▭ 60.0	14.0	▭ 60.0	16.0
16.0	▭ 60.0	14.0	▭ 60.0	14.0	▭ 60.0	16.0

SIGN ID #13
STA 599+20 WESTBOUND
EXISTING GUIDE SIGN ON STRUCTURAL STEEL SIGN SUPPORTS
PROPOSED GUIDE SIGN ON STRUCTURAL STEEL SIGN SUPPORTS

SIGN PANEL REMOVAL - TYPE 3, 198.3 SF
REMOVE GROUND MOUNTED SIGN SUPPORTS - 2 EA
SIGN PANEL - TYPE 3, 200 SF

MODEL: Sheet-14
FILE NAME: pw://cdmsmith-s202-ew.bentley.com:ew_pll/Documents/338073/232457/10 Transportation/02 Engineering Services/01 Roadway/10 BIM_CADD/01 Working/Sheets/76R99-sht-details_signing panels.dgn

CDM Smith	USER NAME = PELLOTCA	DESIGNED - CAP	REVISED -	STATE OF ILLINOIS DEPARTMENT OF TRANSPORTATION	SIGNING PLANS
		DRAWN - CAP	REVISED -		
	PLOT SCALE = 0.16666633 ' / In.	CHECKED - AAC	REVISED -		SCALE: NONE SHEET 226 OF 388 SHEETS STA. TO STA.
	PLOT DATE = 11/13/2024	DATE - 09/09/2024	REVISED -		

F.A.I. RTE.	SECTION	COUNTY	TOTAL SHEETS	SHEET NO.
64	82-(4,5,6,7)-1RS-2	ST. CLAIR	388	226
		CONTRACT NO. 76R99		
	ILLINOIS FED. AID PROJECT			



SIGN ID #14
STA 607+00 WESTBOUND
EXISTING GUIDE SIGN ON STRUCTURAL STEEL SIGN SUPPORTS
PROPOSED GUIDE SIGN ON STRUCTURAL STEEL SIGN SUPPORTS

SIGN PANEL REMOVAL - TYPE 3, 210.1 SF
REMOVE GROUND MOUNTED SIGN SUPPORTS - 2 EA
SIGN PANEL - TYPE 3, 217.5 SF

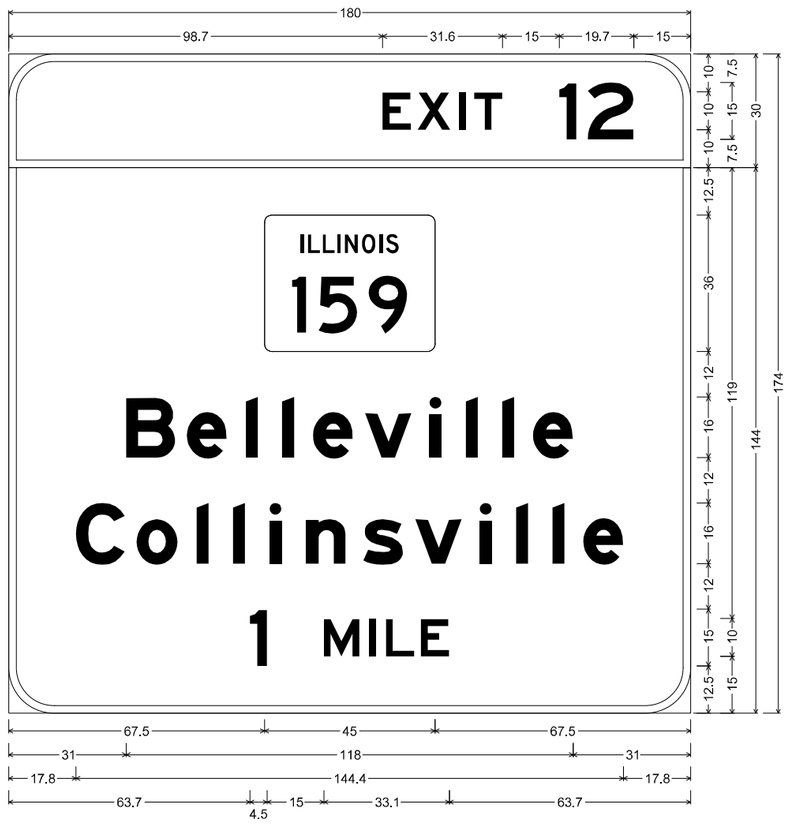

12.0" Radius, 2.0" Border, White on, Green;
"EXIT", E 2K 120% spacing; "12", E 2K;

12.0" Radius, 2.0" Border, White on, Green;
"Belleville", E Mod 2K; "Collinsville", E Mod 2K; "1", E 2K; "MILE", E 2K;
Table of widths and spaces

98.7	E 7.5	1.7	X 8.7	2.4	I 1.8	2.0	T 7.5	15.0	1 4.5	3.0	2 12.2	15.0

67.5	45.0	67.5

31.0	B 13.0	3.0	e 10.6	5.0	I 3.2	6.4	I 3.2	4.9	e 10.6	3.2	v 12.3	4.6	i 3.2	6.4	I 3.2	6.4	I 3.2	5.0	e 10.6	31.0

17.8	C 12.9	3.1	o 10.8	5.0	I 3.2	6.4	I 3.2	6.4	i 3.2	6.4	n 10.6	4.6	s 10.6	3.2	v 12.3	4.6	i 3.2	6.4	I 3.2	6.4	I 3.2	5.0	e 10.5	17.8

63.7	1 4.5	15.0	M 9.4	2.6	I 1.8	2.6	L 7.5	1.7	E 7.5	63.7

MODEL: Sheet-15
FILE NAME: pw://cdmsmith-as02-ew.bentley.com:ew_e11/Documents/338073/29245710 Transportation/02 Engineering Services/01 Roadway/10 BIM_CADD/01 Working/Sheets/76R99-sht-details_signing panels.dgn

CDM Smith

USER NAME = PELLOTCA	DESIGNED - CAP	REVISED -	STATE OF ILLINOIS DEPARTMENT OF TRANSPORTATION	SIGNING PLANS
	DRAWN - CAP	REVISED -		
PLOT SCALE = 0.16666633 ' / in.	CHECKED - AAC	REVISED -		SCALE: NONE SHEET 227 OF 388 SHEETS STA. TO STA.
PLOT DATE = 11/13/2024	DATE - 09/09/2024	REVISED -		

F.A.I. RTE.	SECTION	COUNTY	TOTAL SHEETS	SHEET NO.
64	82-(4,5,6,7)-1RS-2	ST. CLAIR	388	227
		CONTRACT NO. 76R99		
		ILLINOIS FED. AID PROJECT		



SIGN ID #15
STA 615+50 WESTBOUND
EXISTING GUIDE SIGN ON STRUCTURAL STEEL SIGN SUPPORTS
PROPOSED GUIDE SIGN ON STRUCTURAL STEEL SIGN SUPPORTS

SIGN PANEL REMOVAL - TYPE 3, 191.7 SF
REMOVE GROUND MOUNTED SIGN SUPPORTS - 2 EA
SIGN PANEL - TYPE 3, 200 SF

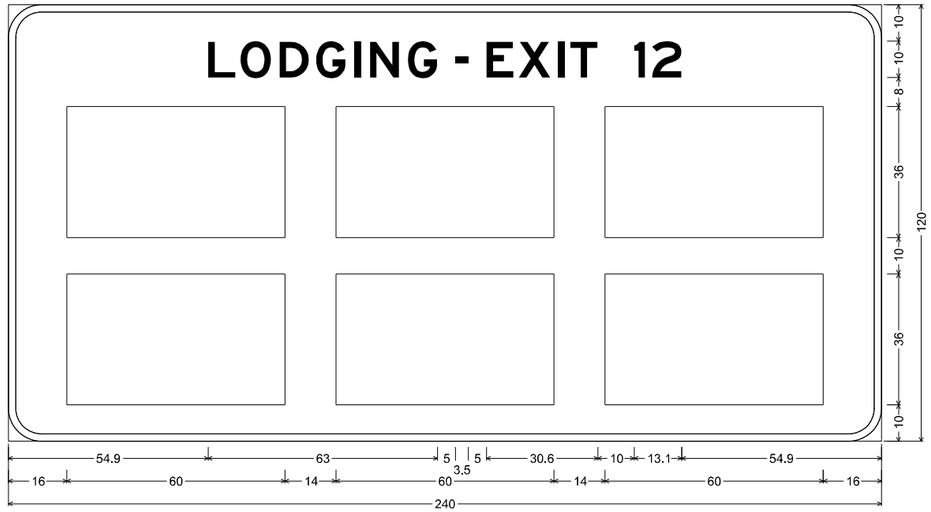

9.0" Radius, 2.0" Border, White on, Blue;
"LODGING", E 2K; "-", E 2K; "EXIT 12", E 2K;
Table of widths and spaces

54.9	L 7.5	1.4	O 8.4	2.3	D 8.1	2.0	G 8.1	2.3	I 1.8	2.6	N 8.1	2.3	G 8.1	5.0	- 3.5	5.0	E 7.5	1.4	X 8.7	2.0	I 1.8	1.7	T 7.5	10.0	1 3.0	2.0	2 8.1	54.9				
16.0	▭ 60.0	14.0	▭ 60.0	14.0	▭ 60.0	16.0																										
16.0	▭ 60.0	14.0	▭ 60.0	14.0	▭ 60.0	16.0																										

MODEL: Sheet-16
FILE NAME: pw://cdmsmith-as02-ew.bentley.com:aw_o1\Documents\338073\2924577\10 Transportation\02 Engineering Services\01 Roadway\10 BIM - CADD\01 Working\Sheets\76R99-sht-details_signing panels.dgn

CDM Smith

USER NAME = PELLOTCA	DESIGNED - CAP	REVISED -	
	DRAWN - CAP	REVISED -	
PLOT SCALE = 0.16666633 ' / in.	CHECKED - AAC	REVISED -	
PLOT DATE = 11/13/2024	DATE - 09/09/2024	REVISED -	

STATE OF ILLINOIS
DEPARTMENT OF TRANSPORTATION

SIGNING PLANS

SCALE: NONE | SHEET 228 OF 388 SHEETS | STA. | TO STA.

F.A.I. RTE.	SECTION	COUNTY	TOTAL SHEETS	SHEET NO.
64	82-(4,5,6,7)-1RS-2	ST. CLAIR	388	228
		CONTRACT NO. 76R99		
	ILLINOIS	FED. AID PROJECT		



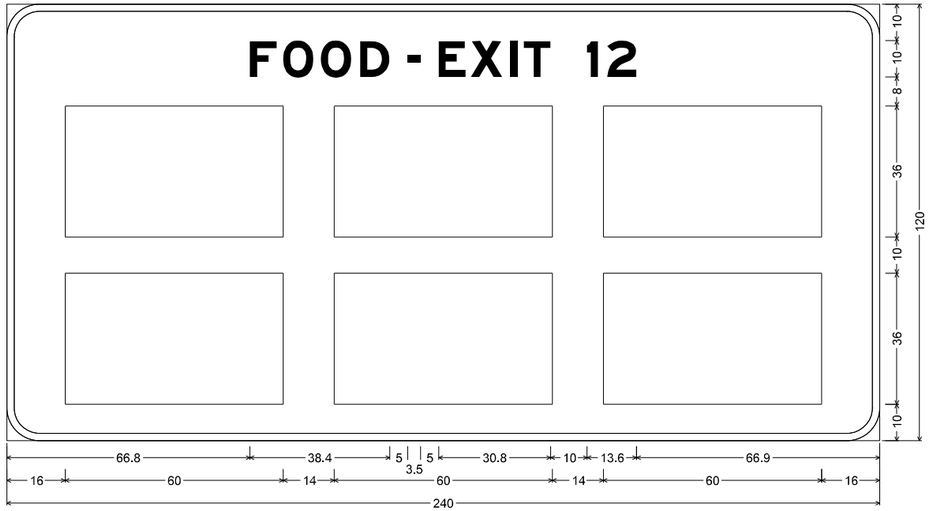

9.0" Radius, 2.0" Border, White on, Blue;
"FOOD", E Mod 2K; "-", E Mod 2K; "EXIT 12", E Mod 2K;
Table of widths and spaces

	F		O		O		D		-		E		X		I		T		1		2	
66.8	7.4	1.7	8.4	2.0	8.4	2.4	8.1	5.0	3.5	5.0	7.4	1.4	8.7	2.1	2.0	1.8	7.4	10.0	3.0	2.5	8.1	66.9

16.0	▭ 60.0	14.0	▭ 60.0	14.0	▭ 60.0	16.0

16.0	▭ 60.0	14.0	▭ 60.0	14.0	▭ 60.0	16.0

SIGN ID #16
STA 659+00 WESTBOUND
EXISTING GUIDE SIGN ON STRUCTURAL STEEL SIGN SUPPORTS
PROPOSED GUIDE SIGN ON STRUCTURAL STEEL SIGN SUPPORTS

SIGN PANEL REMOVAL - TYPE 3, 183.7 SF
REMOVE GROUND MOUNTED SIGN SUPPORTS - 2 EA
SIGN PANEL - TYPE 3, 200 SF

MODEL: Sheet-17
FILE NAME: pw://cdmsmith-az02-pw.bentley.com:pw_pl1/Documents/338073/292457/10 Transportation/02 Engineering Services/01 Roadway/10 BIM_CADD/01 Working/Sheets/76R99-sht-details_signing panels.dgn

CDM Smith	USER NAME = PELLOTCA	DESIGNED - CAP	REVISED -	STATE OF ILLINOIS DEPARTMENT OF TRANSPORTATION	SIGNING PLANS	F.A.I. RTE.	SECTION	COUNTY	TOTAL SHEETS	SHEET NO.
		DRAWN - CAP	REVISED -			64	82-(4,5,6,7)-1RS-2	ST. CLAIR	388	229
	PLOT SCALE = 0.16666633 ' / in.	CHECKED - AAC	REVISED -					CONTRACT NO. 76R99		
	PLOT DATE = 11/13/2024	DATE - 09/09/2024	REVISED -		SCALE: NONE SHEET 229 OF 388 SHEETS STA. TO STA.		ILLINOIS	FED. AID PROJECT		



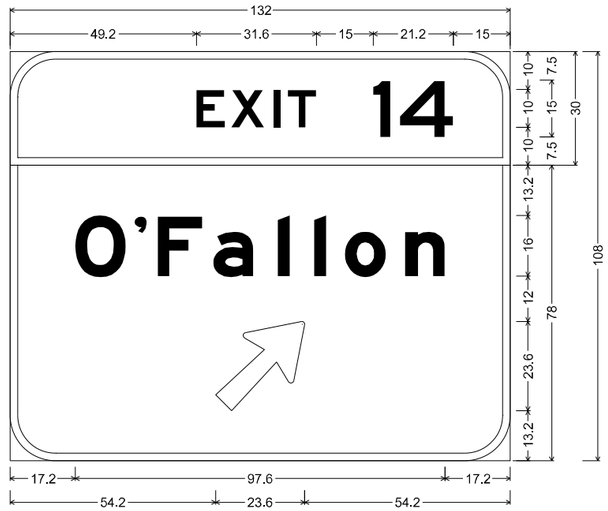

12.0" Radius, 2.0" Border, White on, Green;
"EXIT", E 2K 120% spacing; "14", E 2K;

12.0" Radius, 2.0" Border, White on, Green;
"O'Fallon", E Mod 2K; Arrow 133 - 30.0" 45';
Table of widths and spaces

| | | |



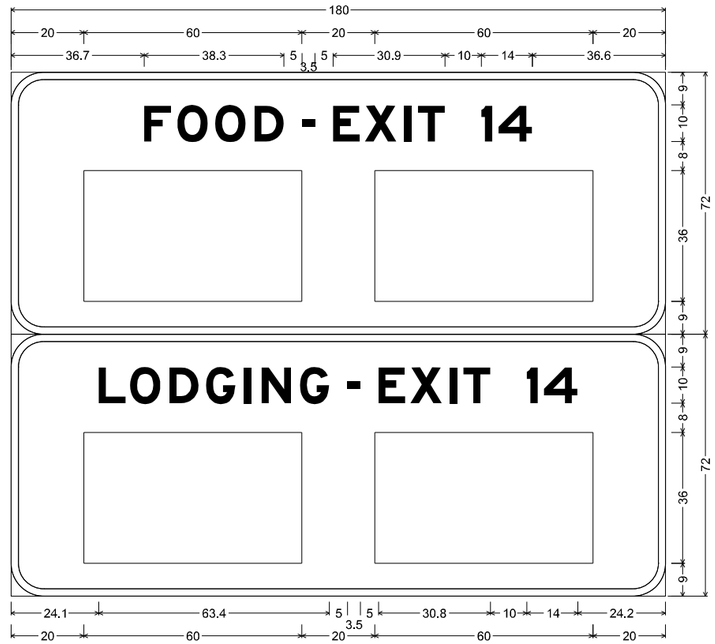

9.0" Radius, 2.0" Border, White on, Blue;
"FOOD", E Mod 2K; "-", E Mod 2K; "EXIT 14", E Mod 2K;

9.0" Radius, 2.0" Border, White on, Blue;
"LODGING", E Mod 2K; "-", E Mod 2K; "EXIT 14", E Mod 2K;
Table of widths and spaces

	F		O		O		D		-		E		X		I		T		I		4			
36.7	7.4	1.7	8.4	1.9	8.4	2.4	8.1	5.0	3.5	5.0	7.4	1.4	8.7	2.1	2.0	1.9	7.4	10.0	3.0	1.7	9.3	36.6		
20.0	60.0	20.0	60.0	20.0																				

	L		O		D		G		I		N		G		-		E		X		I		T	
24.1	7.4	1.2	8.4	2.4	8.1	2.0	8.1	2.4	2.0	2.8	8.1	2.4	8.1	5.0	3.5	5.0	7.4	1.4	8.7	2.1	2.0	1.8	7.4	
		1		4																				
	10.0	3.0	1.7	9.3	24.2																			
20.0	60.0	20.0	60.0	20.0																				

SIGN ID #18
STA 707+60 WESTBOUND
RELOCATE "GAS" SIGNAGE (SEE SHEET 50)
EXISTING GUIDE SIGN ON STRUCTURAL STEEL SIGN SUPPORTS
PROPOSED GUIDE SIGN ON STRUCTURAL STEEL SIGN SUPPORTS

SIGN PANEL REMOVAL - TYPE 3, 228.3 SF
REMOVE GROUND MOUNTED SIGN SUPPORTS - 2 EA
SIGN PANEL - TYPE 3, 180 SF

MODEL: Sheet-19
FILE NAME: pw://cdmsmith-az02-pw.bentley.com:pw_pl1/Documents/338073/292457/10 Transportation/02 Engineering Services/01 Roadway/10 BIM_CADD/01 Working/Sheets/76R99-sht-details_signing panels.dgn

CDM Smith	USER NAME = PELLOTCA	DESIGNED - CAP	REVISED -	STATE OF ILLINOIS DEPARTMENT OF TRANSPORTATION	SIGNING PLANS	F.A.I. RTE.	SECTION	COUNTY	TOTAL SHEETS	SHEET NO.
		DRAWN - CAP	REVISED -			64	82-(4,5,6,7)-1RS-2	ST. CLAIR	388	231
	PLOT SCALE = 0.16666633 ' / in.	CHECKED - AAC	REVISED -					CONTRACT NO. 76R99		
	PLOT DATE = 11/13/2024	DATE - 09/09/2024	REVISED -		SCALE: NONE SHEET 231 OF 388 SHEETS STA. TO STA.			ILLINOIS FED. AID PROJECT		



SIGN ID #19
STA 394+80 EASTBOUND
EXISTING GUIDE SIGN ON STRUCTURAL STEEL SIGN SUPPORTS
PROPOSED GUIDE SIGN ON STRUCTURAL STEEL SIGN SUPPORTS

SIGN PANEL REMOVAL - TYPE 3, 98.9 SF
REMOVE GROUND MOUNTED SIGN SUPPORTS - 2 EA
SIGN PANEL - TYPE 3, 115.5 SF

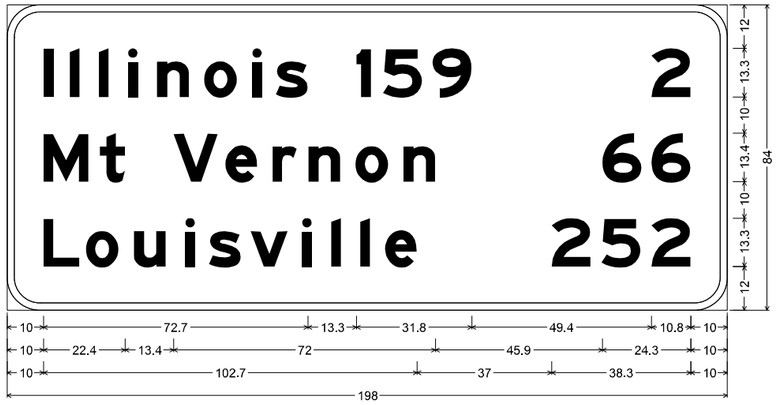

9.0" Radius, 2.0" Border, White on, Green;
"Illinois 159", E Mod 2K; "2", E Mod 2K; "Mt Vernon", E Mod 2K; "66", E Mod 2K; "Louisville", E Mod 2K; "252", E Mod 2K;
Table of widths and spaces

10.0	I	2.7	4.5	I	2.7	5.3	I	2.7	5.3	i	2.7	5.3	n	8.8	4.2	o	9.0	4.2	i	2.6	3.9	s	8.8	13.3	1	4.0	3.4	5	10.8	2.8	9	10.8	49.4	2	10.8	10.0

10.0	M	12.4	3.1	t	6.9	13.4	V	12.2	2.0	e	8.8	4.2	r	6.6	3.2	n	8.8	4.2	o	9.0	4.2	n	8.8	45.9	6	10.8	2.7	6	10.8	10.0			

10.0	L	9.9	1.7	o	9.1	4.1	u	8.8	5.4	i	2.6	3.9	s	8.8	2.7	v	10.2	3.9	i	2.7	5.3	l	2.7	5.3	l	2.7	4.1	e	8.8	37.0	2	10.8	2.9	5	10.8	3.0	2	10.8	10.0

MODEL: Sheet>20
FILE NAME: pw://cdmsmith-as02-ew.bentley.com:pw_p11/Documents/338073/2924577/10 Transportation/02 Engineering Services/01 Roadway/10 BIM_CADD/01 Working/Sheets/76R99-sht-details_signing panels.dgn

CDM Smith

USER NAME = PELLOTCA	DESIGNED - CAP	REVISED -		
	DRAWN - CAP	REVISED -		
PLOT SCALE = 0.16666633 ' / in.	CHECKED - AAC	REVISED -		
PLOT DATE = 11/13/2024	DATE - 09/09/2024	REVISED -		

STATE OF ILLINOIS
DEPARTMENT OF TRANSPORTATION

SIGNING PLANS

SCALE: NONE | SHEET 232 OF 388 SHEETS | STA. | TO STA.

F.A.I. RTE.	SECTION	COUNTY	TOTAL SHEETS	SHEET NO.
64	82-(4,5,6,7)-1RS-2	ST. CLAIR	388	232
		CONTRACT NO. 76R99		
	ILLINOIS FED. AID PROJECT			



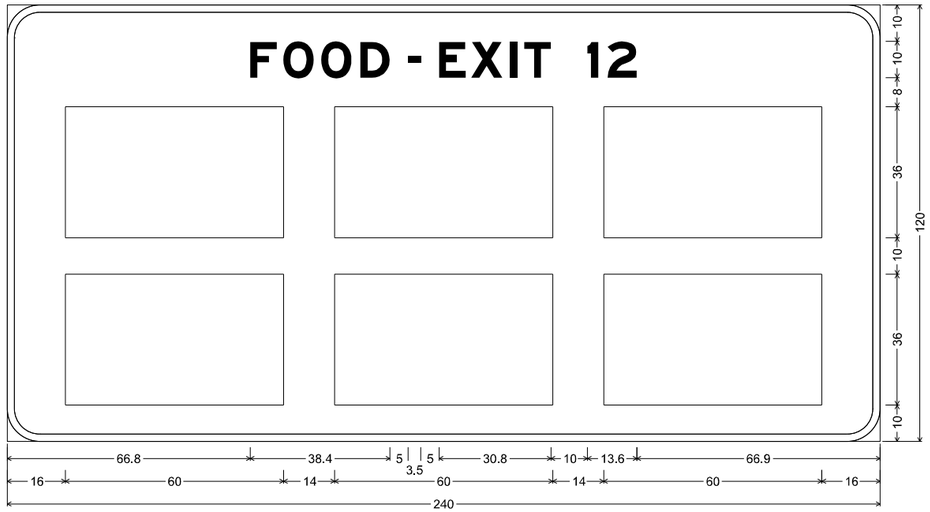

9.0" Radius, 2.0" Border, White on, Blue;
"FOOD", E Mod 2K; "-", E Mod 2K; "EXIT 12", E Mod 2K;
Table of widths and spaces

66.8	**F** 7.4	1.7	**O** 8.4	2.0	**O** 8.4	2.4	**D** 8.1	5.0	**-** 3.5	5.0	**E** 7.4	1.4	**X** 8.7	2.1	**I** 2.0	1.8	**T** 7.4	10.0	**1** 3.0	2.5	**2** 8.1	66.9

16.0	▭ 60.0	14.0	▭ 60.0	14.0	▭ 60.0	16.0

16.0	▭ 60.0	14.0	▭ 60.0	14.0	▭ 60.0	16.0

SIGN ID #20
STA 422+40 EASTBOUND
EXISTING GUIDE SIGN ON STRUCTURAL STEEL SIGN SUPPORTS
PROPOSED GUIDE SIGN ON STRUCTURAL STEEL SIGN SUPPORTS

SIGN PANEL REMOVAL - TYPE 3, 187.7 SF
REMOVE GROUND MOUNTED SIGN SUPPORTS - 2 EA
SIGN PANEL - TYPE 3, 200 SF

MODEL: Sheet>21
FILE NAME: pw://cdmsmith-us02-pw.bentley.com:pw_p11/Documents/338073/2924577/10 Transportation/02 Engineering Services/01 Roadway/10 BIM_CADD/01 Working/Sheets/76R99-int-details_signing panels.dgn

CDM Smith	USER NAME = PELLOTCA	DESIGNED - CAP	REVISED -	
		DRAWN - CAP	REVISED -	
	PLOT SCALE = 0.16666633 ' / in.	CHECKED - AAC	REVISED -	
	PLOT DATE = 11/13/2024	DATE - 09/09/2024	REVISED -	

STATE OF ILLINOIS
DEPARTMENT OF TRANSPORTATION

SIGNING PLANS

SCALE: NONE | SHEET 233 OF 388 SHEETS | STA. | TO STA.

F.A.I. RTE.	SECTION	COUNTY	TOTAL SHEETS	SHEET NO.
64	82-(4,5,6,7)-1RS-2	ST. CLAIR	388	233
		CONTRACT NO. 76R99		
	ILLINOIS FED. AID PROJECT			



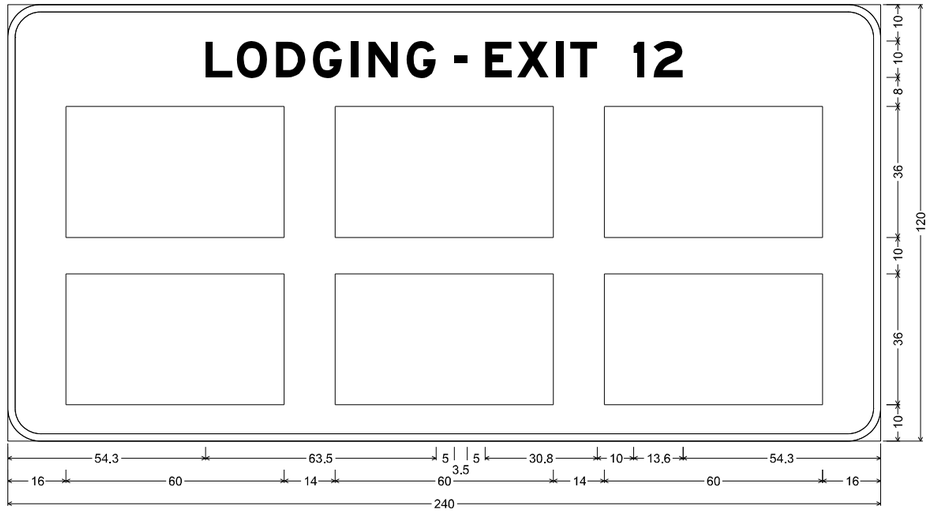

9.0" Radius, 2.0" Border, White on, Blue;
"LODGING", E Mod 2K; "-", E Mod 2K; "EXIT 12", E Mod 2K;
Table of widths and spaces

	L		**O**		**D**		**G**		**I**		**N**		**G**		**-**		**E**		**X**		**I**		**T**		**1**		**2**	
54.3	7.4	1.2	8.4	2.4	8.1	2.0	8.1	2.4	2.0	2.8	8.1	2.4	8.1	5.1	3.5	4.9	7.5	1.4	8.6	2.2	2.0	1.8	7.4	10.0	3.0	2.5	8.1	54.3
16.0	60.0	14.0	60.0	14.0	60.0	16.0																										
16.0	60.0	14.0	60.0	14.0	60.0	16.0																										

SIGN ID #21
STA 434+75 EASTBOUND
EXISTING GUIDE SIGN ON STRUCTURAL STEEL SIGN SUPPORTS
PROPOSED GUIDE SIGN ON STRUCTURAL STEEL SIGN SUPPORTS

SIGN PANEL REMOVAL - TYPE 3, 187.7 SF
REMOVE GROUND MOUNTED SIGN SUPPORTS - 2 EA
SIGN PANEL - TYPE 3, 200 SF

MODEL: Sheet-22
FILE NAME: pw://cdmsmith-az02-pw.bentley.com:pw_p11/Documents/338073/29245710 Transportation/02 Engineering Services/01 Roadway/10 BIM_CADD/01 Working/Sheets/76R99-sht-details_signing panels.dgn

CDM Smith

USER NAME = PELLOTCA	DESIGNED - CAP	REVISED -	**STATE OF ILLINOIS**	**SIGNING PLANS**
	DRAWN - CAP	REVISED -	**DEPARTMENT OF TRANSPORTATION**	
PLOT SCALE = 0.16666633 ' / in.	CHECKED - AAC	REVISED -		SCALE: NONE SHEET 234 OF 388 SHEETS STA. TO STA.
PLOT DATE = 11/13/2024	DATE - 09/09/2024	REVISED -		

F.A.I. RTE.	SECTION	COUNTY	TOTAL SHEETS	SHEET NO.
64	82-(4,5,6,7)-1RS-2	ST. CLAIR	388	234
		CONTRACT NO. 76R99		
	ILLINOIS FED. AID PROJECT			



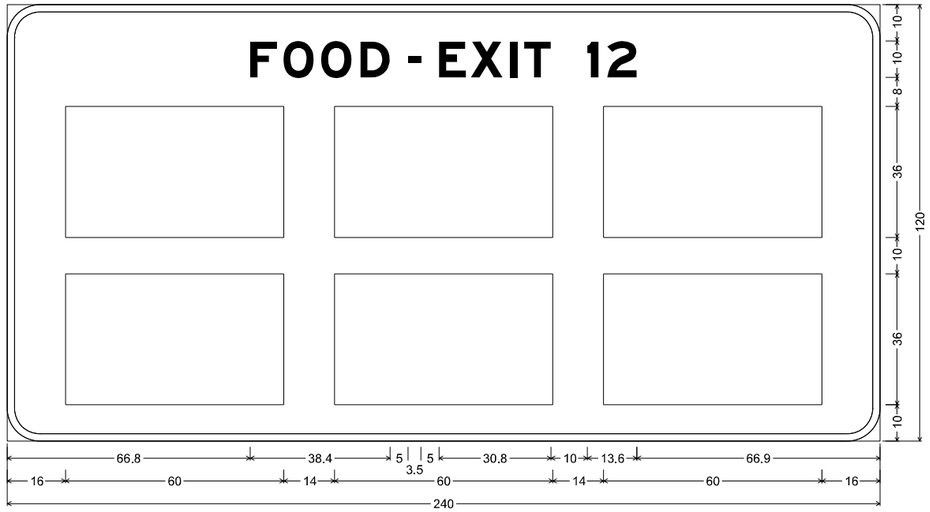

9.0" Radius, 2.0" Border, White on, Blue;
"FOOD", E Mod 2K; "-", E Mod 2K; "EXIT 12", E Mod 2K;
Table of widths and spaces

66.8	F	7.4	1.7	O	8.4	2.0	O	8.4	2.4	D	8.1	5.0	-	3.5	5.0	E	7.4	1.4	X	8.7	2.1	I	2.0	1.8
T	7.4	10.0	I	3.0	2.5	2	8.1	66.9																

16.0	□ 60.0	14.0	□ 60.0	14.0	□ 60.0	16.0
16.0	□ 60.0	14.0	□ 60.0	14.0	□ 60.0	16.0

SIGN ID #22
STA 444+75 EASTBOUND
EXISTING GUIDE SIGN ON STRUCTURAL STEEL SIGN SUPPORTS
PROPOSED GUIDE SIGN ON EXISTING STRUCTURAL STEEL SIGN SUPPORTS

SIGN PANEL REMOVAL - TYPE 3, 200 SF
REMOVE GROUND MOUNTED SIGN SUPPORTS - 3 EA
SIGN PANEL - TYPE 3, 200 SF

MODEL: Sheet+23
FILE NAME: pw://cdmsmith-a302-ew.bentley.com:pw_e11/Documents/338073/2/92457/10 Transportation/02 Engineering Services/01 Roadway/10 BIM_CADD/01 Working/Sheets/76R99-sht+details_signing panels.dgn

CDM Smith

USER NAME = PELLOTCA	DESIGNED - CAP	REVISED -	STATE OF ILLINOIS DEPARTMENT OF TRANSPORTATION	SIGNING PLANS
	DRAWN - CAP	REVISED -		
PLOT SCALE = 0.16666633 ' / in.	CHECKED - AAC	REVISED -		
PLOT DATE = 11/13/2024	DATE - 09/09/2024	REVISED -		SCALE: NONE SHEET 235 OF 388 SHEETS STA. TO STA.

F.A.I. RTE.	SECTION	COUNTY	TOTAL SHEETS	SHEET NO.
64	82-(4,5,6,7)-1RS-2	ST. CLAIR	388	235
		CONTRACT NO. 76R99		
	ILLINOIS FED. AID PROJECT			



SIGN ID #23
STA 455+50 EASTBOUND
EXISTING GUIDE SIGNS ON EXISTING STRUCTURE
PROPOSED GUIDE SIGNS ON EXISTING STRUCTURE

SIGN PANEL REMOVAL - TYPE 3, 161.7 SF
SIGN PANEL - TYPE 3, 217.5 SF



12.0" Radius, 2.0" Border, White on, Green;
"EXIT", E 2K 120% spacing; "12", E 2K;

12.0" Radius, 2.0" Border, White on, Green;
"Belleville", E Mod 2K; "Collinsville", E Mod 2K; "1", E 2K; "MILE", E 2K;
Table of widths and spaces

| | | |



SIGN ID #24
STA 460+00 EASTBOUND
EXISTING GUIDE SIGN ON STRUCTURAL STEEL SIGN SUPPORTS
PROPOSED GUIDE SIGN ON STRUCTURAL STEEL SIGN SUPPORTS

SIGN PANEL REMOVAL - TYPE 3, 282.5 SF
REMOVE GROUND MOUNTED SIGN SUPPORTS - 2 EA
SIGN PANEL - TYPE 3, 270 SF

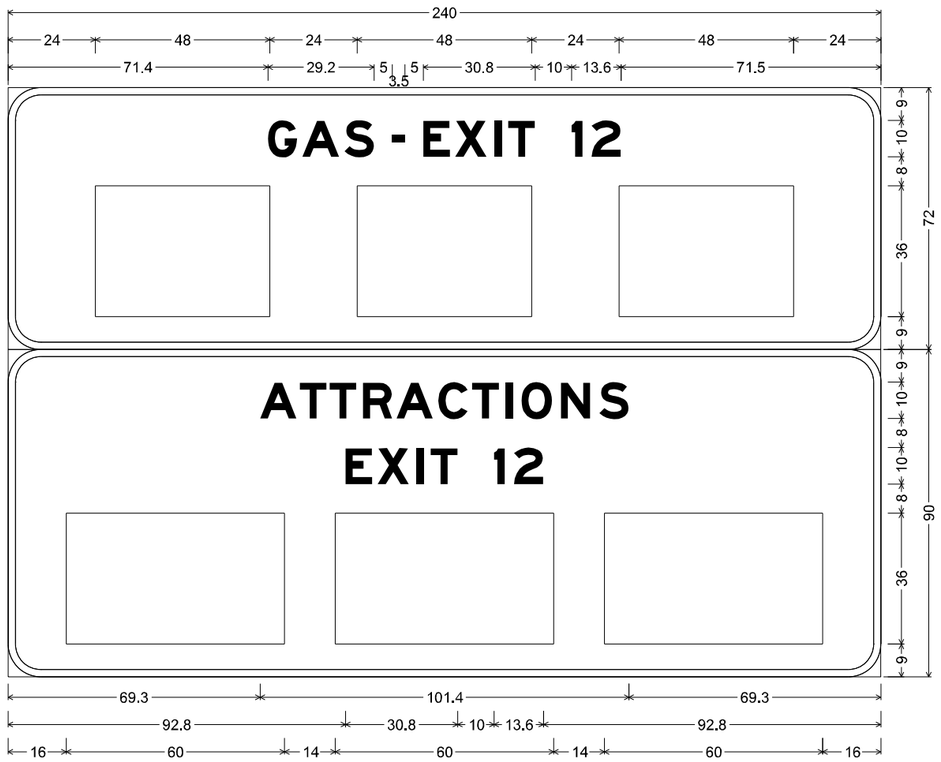

9.0" Radius, 2.0" Border, White on, Blue;
"GAS", E Mod 2K; "-", E Mod 2K; "EXIT 12", E Mod 2K;

9.0" Radius, 2.0" Border, White on, Blue;
"ATTRACTIONS", E Mod 2K; "EXIT 12", E Mod 2K;
Table of widths and spaces

| | | |

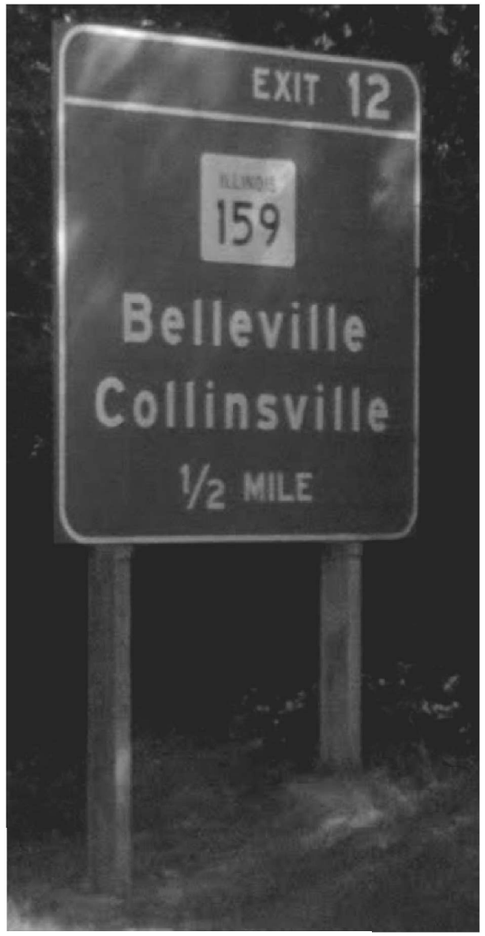

SIGN ID #25
STA 481+00 EASTBOUND
EXISTING GUIDE SIGN ON STRUCTURAL STEEL SIGN SUPPORTS
PROPOSED GUIDE SIGN ON STRUCTURAL STEEL SIGN SUPPORTS

SIGN PANEL REMOVAL - TYPE 3, 189.0 SF
REMOVE GROUND MOUNTED SIGN SUPPORTS - 2 EA
SIGN PANEL - TYPE 3, 217.5 SF

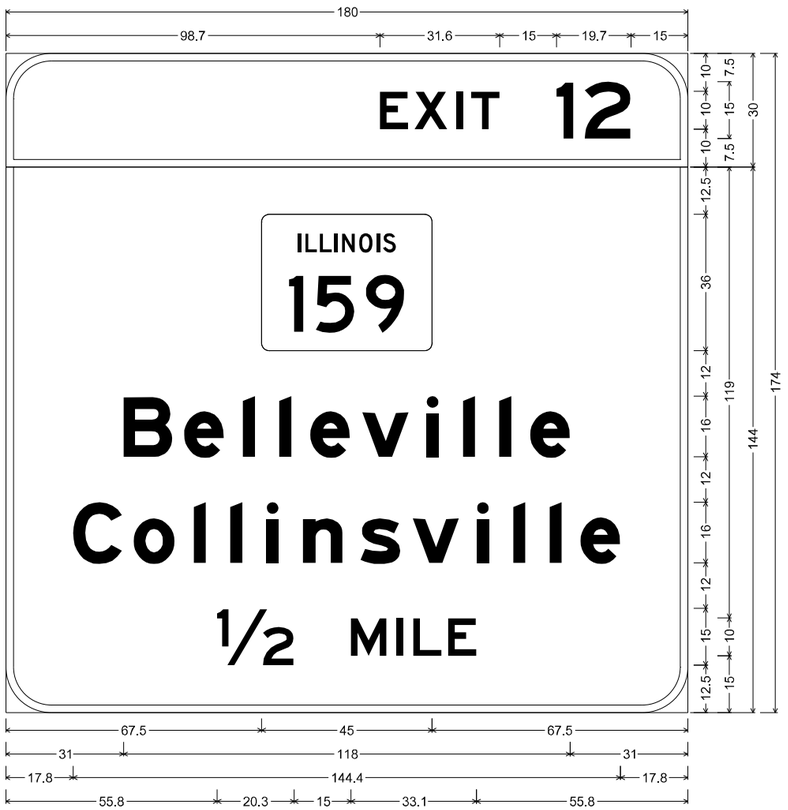

12.0" Radius, 2.0" Border, White on, Green;
"EXIT", E 2K 120% spacing; "12", E 2K;

12.0" Radius, 2.0" Border, White on, Green;
"Belleville", E Mod 2K; "Collinsville", E Mod 2K; "½", E 2K; "MILE", E 2K;
Table of widths and spaces

| | | |



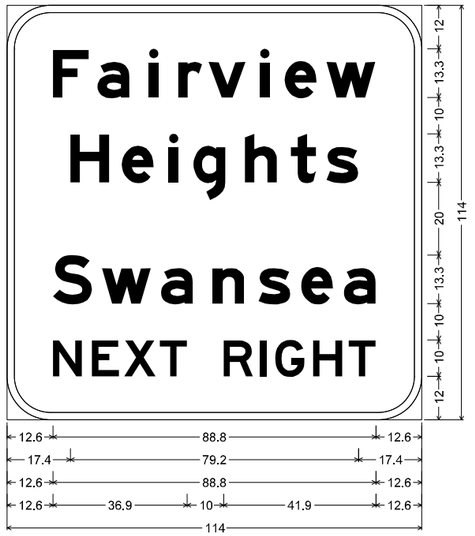

12.0" Radius, 2.0" Border, White on, Green;
"Fairview", E Mod 2K; "Heights", E Mod 2K;
"Swansea", E Mod 2K; "NEXT RIGHT", E 2K;
Table of widths and spaces

	F		a		i		r		v		i		e		w	
12.6	9.9	2.4	8.8	5.3	2.7	5.3	6.7	1.7	10.3	3.8	2.7	4.1	8.8	2.7	13.6	12.6

	H		e		i		g		h		t		s	
17.4	10.8	3.3	8.8	4.2	2.6	4.2	8.8	5.3	8.8	3.9	6.9	2.8	8.8	17.4

	S		w		a		n		s		e		a	
12.6	10.8	2.7	13.6	2.6	8.8	5.4	8.8	3.8	8.8	3.0	8.8	2.9	8.8	12.6

	N		E		X		T
12.6	8.1	2.6	7.5	1.4	8.7	1.1	7.5

	R		I		G		H		T	
10.0	8.1	2.0	1.8	2.3	8.1	2.3	8.1	1.7	7.5	12.6

SIGN ID #26
STA 493+25 EASTBOUND
EXISTING GUIDE SIGN ON STRUCTURAL STEEL SIGN SUPPORTS
PROPOSED GUIDE SIGN ON STRUCTURAL STEEL SIGN SUPPORTS

SIGN PANEL REMOVAL - TYPE 3, 141.8 SF
REMOVE GROUND MOUNTED SIGN SUPPORTS - 2 EA
SIGN PANEL - TYPE 3, 90.25 SF

MODEL: Sheet-27
FILE NAME: pw://cdmsmith-az02-pw.bentley.com:pw_pl1/Documents/338073/292457/10 Transportation/02 Engineering Services/01 Roadway/10 BIM_CADD/01 Working/Sheets/76R99-sht-details_signing panels.dgn

CDM Smith	USER NAME = PELLOTCA	DESIGNED - CAP	REVISED -	STATE OF ILLINOIS DEPARTMENT OF TRANSPORTATION	SIGNING PLANS	F.A.I. RTE.	SECTION	COUNTY	TOTAL SHEETS	SHEET NO.
		DRAWN - CAP	REVISED -			64	82-(4,5,6,7)-1RS-2	ST. CLAIR	388	239
	PLOT SCALE = 0.16666633 ' / in.	CHECKED - AAC	REVISED -					CONTRACT NO. 76R99		
	PLOT DATE = 11/13/2024	DATE - 09/09/2024	REVISED -		SCALE: NONE SHEET 239 OF 388 SHEETS STA. TO STA.		ILLINOIS	FED. AID PROJECT		



SIGN ID #27
STA 507+20 WESTBOUND
EXISTING GUIDE SIGN ON EXISTING STRUCTURE
PROPOSED GUIDE SIGNS ON EXISTING STRUCTURE

SIGN PANEL REMOVAL - TYPE 3, 222.5 SF
SIGN PANEL - TYPE 3, 225 SF

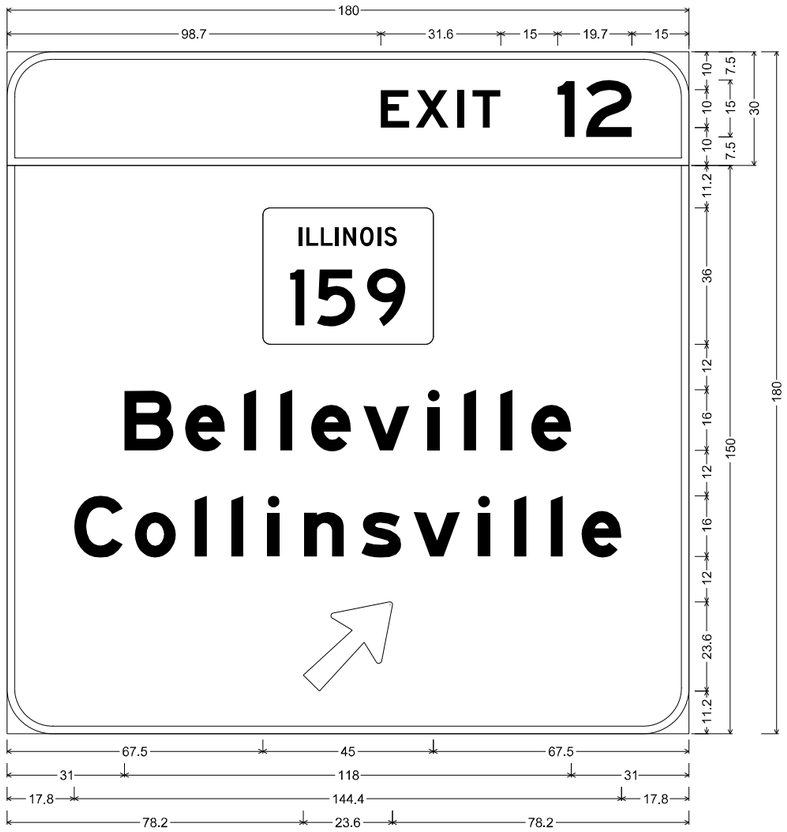

12.0" Radius, 2.0" Border, White on, Green;
"EXIT", E 2K 120% spacing; "12", E 2K;

12.0" Radius, 2.0" Border, White on, Green;
"Belleville", E Mod 2K; "Collinsville", E Mod 2K; Arrow 133 - 30.0" 45';
Table of widths and spaces

98.7	E 7.5	1.7	X 8.7	2.4	I 1.8	2.0	T 7.5	15.0	1 4.5	3.0	2 12.2	15.0
67.5	45.0	67.5										
31.0	B 13.0	3.0	e 10.6	5.0	l 3.2	6.4	l 3.2	4.9	e 10.6	3.2	v 12.3	4.6	i 3.2	6.4	l 3.2	6.4	l 3.2	5.0	e 10.6	31.0
17.8	C 12.9	3.1	o 10.8	5.0	l 3.2	6.4	l 3.2	6.4	l 3.2	6.4	n 10.6	4.6	s 10.6	3.2	v 12.3	4.6	i 3.2	6.4	l 3.2	6.4	l 3.2	5.0	e 10.5	17.8
78.2	23.6	78.2										

MODEL: Sheet>28
FILE NAME: pw://cdmsmith-wa202-pw.bentley.com:pw_d1/Documents/338073/2924577/10 Transportation/02 Engineering Services/01 Roadway/10 BIM_CADD/01 Working/Sheets/76R99-int-details_signing panels.dgn

CDM Smith

USER NAME = PELLOTCA	DESIGNED - CAP	REVISED -	STATE OF ILLINOIS DEPARTMENT OF TRANSPORTATION	SIGNING PLANS
	DRAWN - CAP	REVISED -		
PLOT SCALE = 0.16666633 ' / in.	CHECKED - AAC	REVISED -		SCALE: NONE SHEET 240 OF 388 SHEETS STA. TO STA.
PLOT DATE = 11/13/2024	DATE - 09/09/2024	REVISED -		

F.A.I. RTE.	SECTION	COUNTY	TOTAL SHEETS	SHEET NO.
64	82-(4,5,6,7)-1RS-2	ST. CLAIR	388	240
		CONTRACT NO. 76R99		
	ILLINOIS FED. AID PROJECT			



SIGN ID #28
STA 519+40 EASTBOUND
EXISTING GUIDE SIGN ON STRUCTURAL STEEL SIGN SUPPORTS
PROPOSED GUIDE SIGN ON STRUCTURAL STEEL SIGN SUPPORTS

SIGN PANEL REMOVAL - TYPE 3, 209.0 SF
REMOVE GROUND MOUNTED SIGN SUPPORTS - 2 EA
SIGN PANEL - TYPE 3, 225 SF

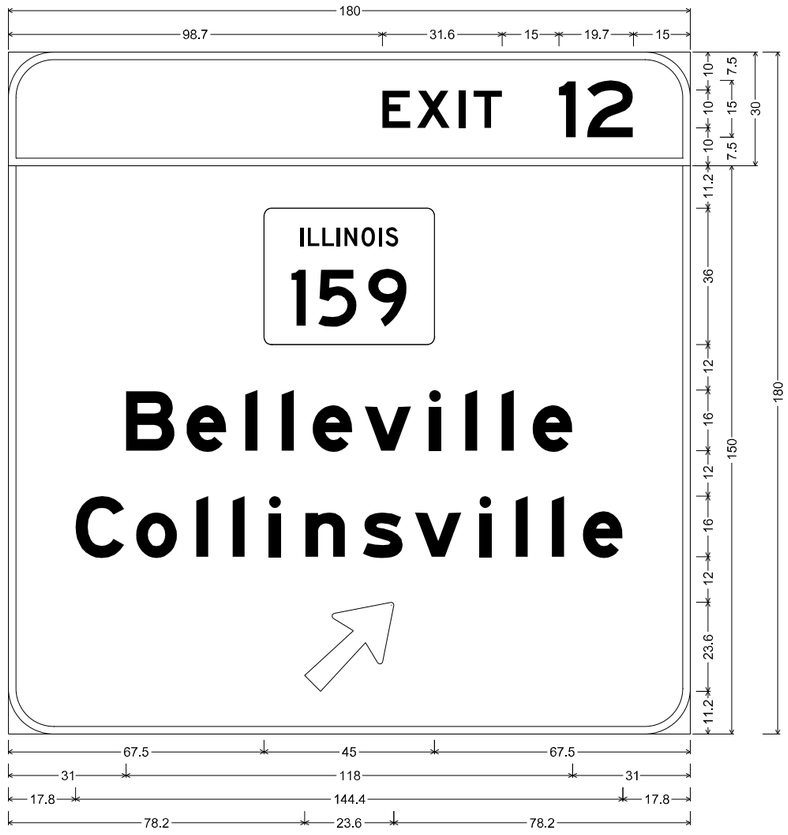

12.0" Radius, 2.0" Border, White on, Green;
"EXIT", E 2K 120% spacing; "12", E 2K;

12.0" Radius, 2.0" Border, White on, Green;
"Belleville", E Mod 2K; "Collinsville", E Mod 2K; Arrow 133 - 30.0" 45';
Table of widths and spaces

| | | |



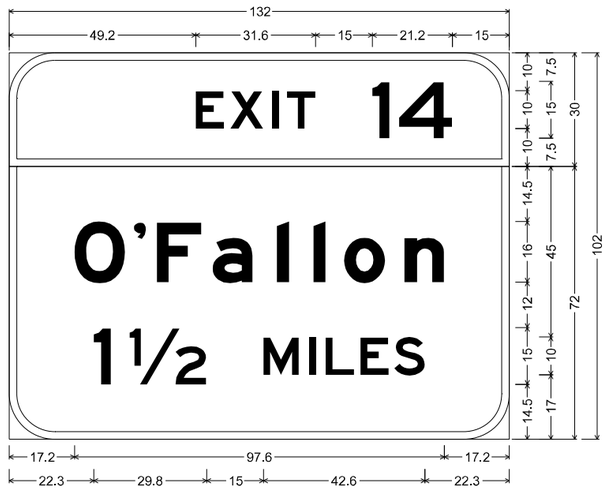

12.0" Radius, 2.0" Border, White on, Green;
"EXIT", E 2K 120% spacing; "14", E 2K;

12.0" Radius, 2.0" Border, White on, Green;
"O'Fallon", E Mod 2K; "1½", E 2K; "MILES", E 2K;
Table of widths and spaces

	E		X		I		T		1		4					
49.2	7.5	1.7	8.7	2.4	1.8	2.0	7.5	15.0	4.5	2.6	14.1	15.0				
	O		'		F		a		I		I		o		n	
17.2	13.4	2.3	3.2	2.9	11.8	2.9	10.5	6.4	3.2	6.4	3.2	5.0	10.9	4.9	10.6	17.2
	1		½		M		I		L		E		S			
22.3	4.5	5.0	20.3	15.0	9.4	2.6	1.8	2.6	7.5	1.7	7.5	1.4	8.1	22.3		

SIGN ID #29
STA 536+75 WESTBOUND
EXISTING GUIDE SIGNS ON EXISTING STRUCTURE
PROPOSED GUIDE SIGNS ON EXISTING STRUCTURE

SIGN PANEL REMOVAL - TYPE 3, 85.3 SF
SIGN PANEL - TYPE 3, 93.5 SF

MODEL: Sheet-30
FILE NAME: pw://cdmsmith-az02-pw.bentley.com:pw_pl1/Documents/338073/292457/10 Transportation/02 Engineering Services/01 Roadway/10 BIM_CADD/01 Working/Sheets/76R99-sht-details_signing panels.dgn

CDM Smith	USER NAME = PELLOTCA	DESIGNED - CAP	REVISED -	STATE OF ILLINOIS DEPARTMENT OF TRANSPORTATION	SIGNING PLANS	F.A.I. RTE.	SECTION	COUNTY	TOTAL SHEETS	SHEET NO.
		DRAWN - CAP	REVISED -			64	82-(4,5,6,7)-1RS-2	ST. CLAIR	388	242
	PLOT SCALE = 0.16666633 ' / in.	CHECKED - AAC	REVISED -					CONTRACT NO. 76R99		
	PLOT DATE = 11/13/2024	DATE - 09/09/2024	REVISED -		SCALE: NONE SHEET 242 OF 388 SHEETS STA. TO STA.		ILLINOIS FED. AID PROJECT			



SIGN ID #30
STA 555+00 EASTBOUND
EXISTING GUIDE SIGN ON STRUCTURAL STEEL SIGN SUPPORTS
PROPOSED GUIDE SIGN ON STRUCTURAL STEEL SIGN SUPPORTS

SIGN PANEL REMOVAL - TYPE 3, 180.4 SF
REMOVE GROUND MOUNTED SIGN SUPPORTS - 2 EA
SIGN PANEL - TYPE 3, 200 SF

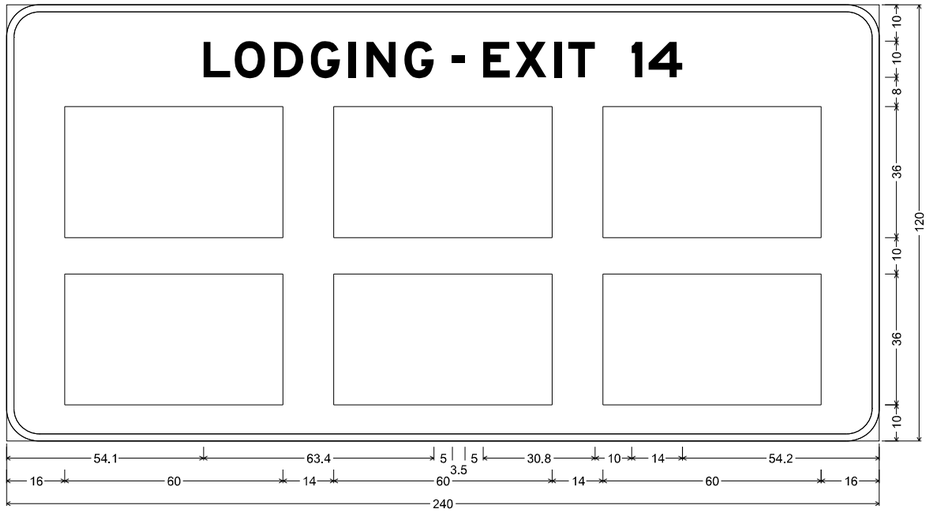

9.0" Radius, 2.0" Border, White on, Blue;
"LODGING", E Mod 2K; "-", E Mod 2K; "EXIT 14", E Mod 2K;
Table of widths and spaces

	L		O		D		G		I		N		G		-		E		X		I		T		I		4	
54.1	7.4	1.2	8.4	2.4	8.1	2.0	8.1	2.4	2.0	2.8	8.1	2.4	8.1	5.0	3.5	5.0	7.4	1.4	8.7	2.1	2.0	1.8	7.4	10.0	3.0	1.7	9.3	54.2

16.0	60.0	14.0	60.0	14.0	60.0	16.0
16.0	60.0	14.0	60.0	14.0	60.0	16.0

MODEL: Sheet>31
FILE NAME: pw://cdmsmith-as02-ew.bentley.com:pw_p11/Documents/338073/2924577/10 Transportation/02 Engineering Services/01 Roadway/10 BIM_CADD/01 Working/Sheets/76R99-sht-details_signing panels.dgn

CDM Smith

USER NAME = PELLOTCA	DESIGNED - CAP	REVISED -	STATE OF ILLINOIS DEPARTMENT OF TRANSPORTATION	SIGNING PLANS
	DRAWN - CAP	REVISED -		
PLOT SCALE = 0.16666633 ' / in.	CHECKED - AAC	REVISED -		SCALE: NONE | SHEET 243 OF 388 SHEETS | STA. TO STA.
PLOT DATE = 11/13/2024	DATE - 09/09/2024	REVISED -		

F.A.I. RTE.	SECTION	COUNTY	TOTAL SHEETS	SHEET NO.
64	82-(4,5,6,7)-1RS-2	ST. CLAIR	388	243
		CONTRACT NO. 76R99		
	ILLINOIS FED. AID PROJECT			



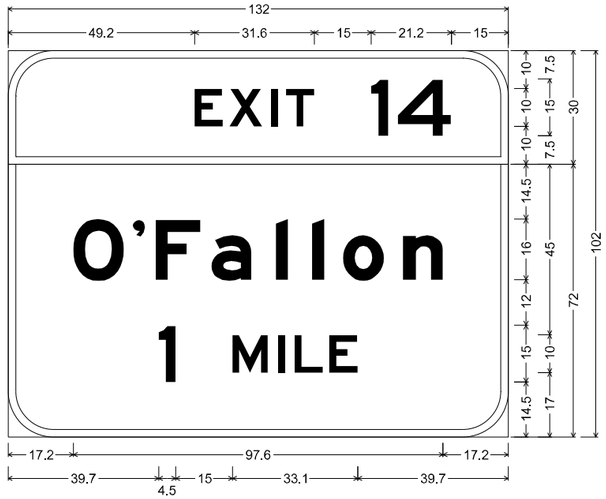

12.0" Radius, 2.0" Border, White on, Green;
"EXIT", E 2K 120% spacing; "14", E 2K;

12.0" Radius, 2.0" Border, White on, Green;
"O'Fallon", E Mod 2K; "1", E 2K; "MILE", E 2K;
Table of widths and spaces

| | | |

SIGN ID #34
STA 614+40 EASTBOUND (EXISTING)
RELOCATE TO STA 605+00 EASTBOUND
EXISTING GUIDE SIGN ON STRUCTURAL STEEL SIGN SUPPORTS
PROPOSED GUIDE SIGN ON STRUCTURAL STEEL SIGN SUPPORTS

SIGN PANEL REMOVAL - TYPE 3, 93.1 SF
REMOVE GROUND MOUNTED SIGN SUPPORTS - 2 EA
SIGN PANEL - TYPE 3, 93.5 SF

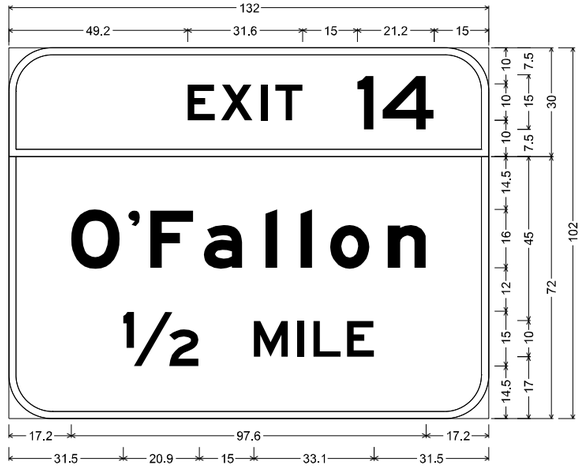

12.0" Radius, 2.0" Border, White on, Green;
"EXIT", E 2K 120% spacing; "14", E 2K;

12.0" Radius, 2.0" Border, White on, Green;
"O'Fallon", E Mod 2K; "½", E Mod 2K; "MILE", E 2K;
Table of widths and spaces

| | | |



SIGN ID #32
STA 605+00 EASTBOUND (EXISTING)
RELOCATE TO STA 609+00 EASTBOUND
EXISTING GUIDE SIGN ON STRUCTURAL STEEL SIGN SUPPORTS
PROPOSED GUIDE SIGN ON STRUCTURAL STEEL SIGN SUPPORTS

SIGN PANEL REMOVAL - TYPE 3, 191.7 SF
REMOVE GROUND MOUNTED SIGN SUPPORTS - 2 EA
SIGN PANEL - TYPE 3, 200 SF

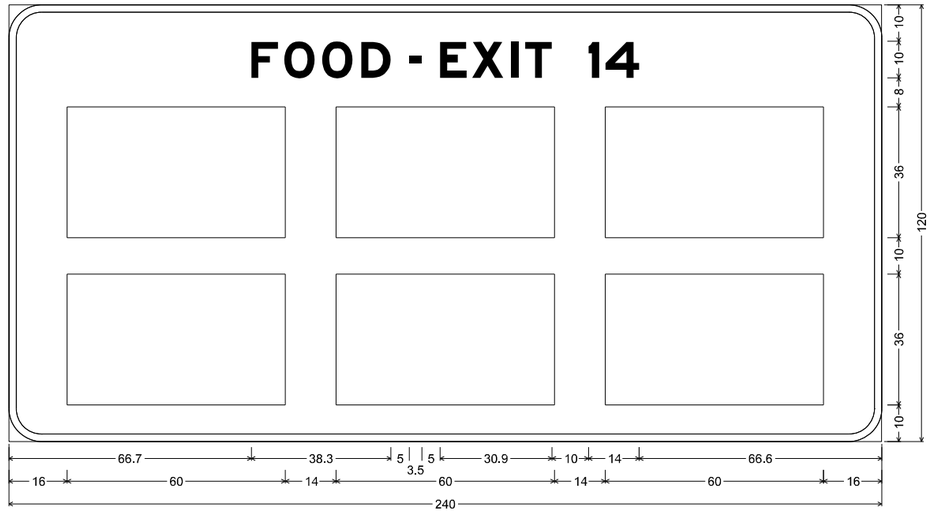

9.0" Radius, 2.0" Border, White on, Blue;
"FOOD", E Mod 2K; "-", E Mod 2K; "EXIT 14", E Mod 2K;
Table of widths and spaces

	F		O		O		D		-		E		X		I		T		1		4	
66.7	7.4	1.7	8.4	1.9	8.4	2.4	8.1	5.0	3.5	5.0	7.4	1.4	8.7	2.1	2.0	1.9	7.4	10.0	3.0	1.7	9.3	66.6

16.0	60.0	14.0	60.0	14.0	60.0	16.0
16.0	60.0	14.0	60.0	14.0	60.0	16.0

MODEL: Sheet+34
FILE NAME: pw://cdmsmith-ao02-pw.bentley.com:pw_01/Documents/338073/292457/10 Transportation/02 Engineering Services/01 Roadway/10 BIM - CADD/01 Working/Sheets/76R99-int-details_signing panels.dgn

CDM Smith

USER NAME = PELLOTCA	DESIGNED - CAP	REVISED -	**STATE OF ILLINOIS**	**SIGNING PLANS**	
	DRAWN - CAP	REVISED -	**DEPARTMENT OF TRANSPORTATION**		
PLOT SCALE = 0.16666633 ' / in.	CHECKED - AAC	REVISED -			
PLOT DATE = 11/13/2024	DATE - 09/09/2024	REVISED -		SCALE: NONE	SHEET 246 OF 388 SHEETS STA. TO STA.

F.A.I. RTE.	SECTION	COUNTY	TOTAL SHEETS	SHEET NO.
64	82-(4,5,6,7)-1RS-2	ST. CLAIR	388	246
		CONTRACT NO. 76R99		
	ILLINOIS FED. AID PROJECT			



SIGN ID #33
STA 609+00 EASTBOUND (EXISTING)
RELOCATE TO STA 614+40 EASTBOUND
RELOCATE "GAS" SIGNAGE (SEE SHEET 51)
EXISTING GUIDE SIGN ON STRUCTURAL STEEL SIGN SUPPORTS
PROPOSED GUIDE SIGN ON STRUCTURAL STEEL SIGN SUPPORTS

SIGN PANEL REMOVAL - TYPE 3, 233 SF
REMOVE GROUND MOUNTED SIGN SUPPORTS - 2 EA
SIGN PANEL - TYPE 3, 180 SF

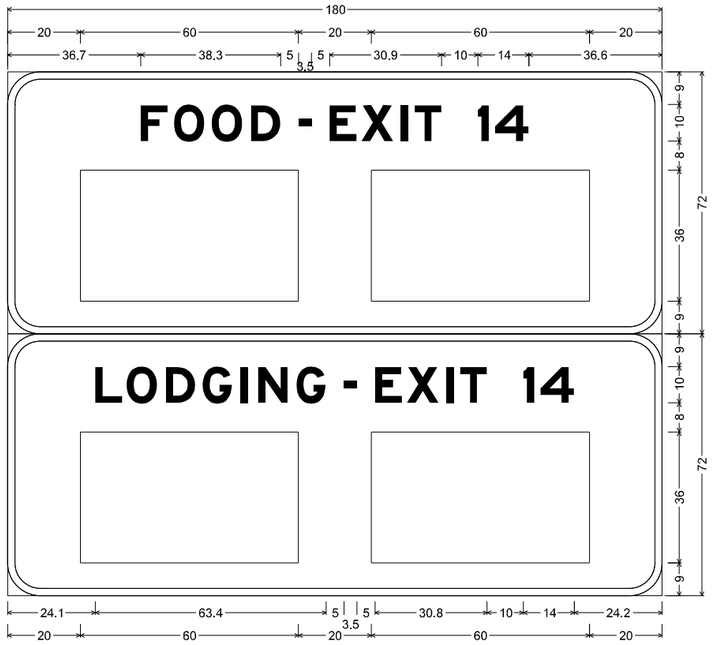

9.0" Radius, 2.0" Border, White on, Blue;
"FOOD", E Mod 2K; "-", E Mod 2K; "EXIT 14", E Mod 2K;

9.0" Radius, 2.0" Border, White on, Blue;
"LODGING", E Mod 2K; "-", E Mod 2K; "EXIT 14", E Mod 2K;
Table of widths and spaces

36.7	F 7.4	1.7	O 8.4	1.9	O 8.4	2.4	D 8.1	5.0	- 3.5	5.0	E 7.4	1.4	X 8.7	2.1	I 2.0	1.9	T 7.4	10.0	1 3.0	1.7	4 9.3	36.6

20.0	▭ 60.0	20.0	▭ 60.0	20.0

24.1	L 7.4	1.2	O 8.4	2.4	D 8.1	2.0	G 8.1	2.4	I 2.0	2.8	N 8.1	2.4	G 8.1	5.0	- 3.5	5.0	E 7.4	1.4	X 8.7	2.1	I 2.0	1.8	T 7.4

10.0	1 3.0	1.7	4 9.3	24.2

20.0	▭ 60.0	20.0	▭ 60.0	20.0

MODEL: Sheet-35
FILE NAME: pw://cdmsmith-az02-pw.bentley.com:pw_pl1/Documents/338073/292457/10 Transportation/02 Engineering Services/01 Roadway/10 BIM_CADD/01 Working/Sheets/76R99-sht-details_signing panels.dgn

CDM Smith	USER NAME = PELLOTCA	DESIGNED - CAP	REVISED -	STATE OF ILLINOIS DEPARTMENT OF TRANSPORTATION	SIGNING PLANS
		DRAWN - CAP	REVISED -		
	PLOT SCALE = 0.16666633 ' / in.	CHECKED - AAC	REVISED -		
	PLOT DATE = 11/13/2024	DATE - 09/09/2024	REVISED -		SCALE: NONE SHEET 247 OF 388 SHEETS STA. TO STA.

F.A.I. RTE.	SECTION	COUNTY	TOTAL SHEETS	SHEET NO.
64	82-(4,5,6,7)-1RS-2	ST. CLAIR	388	247
		CONTRACT NO. 76R99		
		ILLINOIS FED. AID PROJECT		



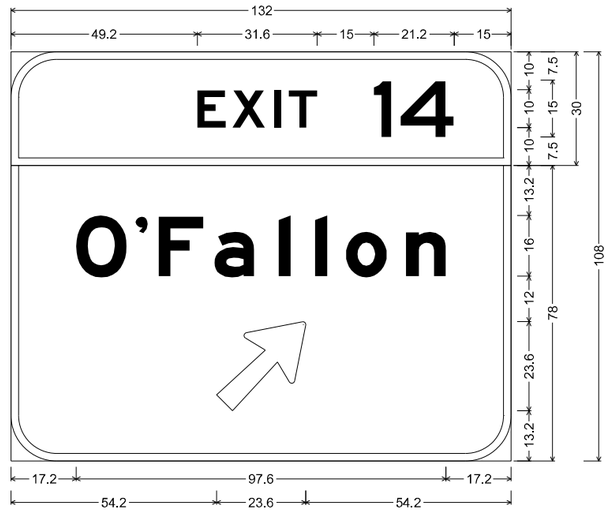

12.0" Radius, 2.0" Border, White on, Green;
"EXIT", E 2K 120% spacing; "14", E 2K;

12.0" Radius, 2.0" Border, White on, Green;
"O'Fallon", E Mod 2K; Arrow 133 - 30.0" 45';
Table of widths and spaces

	E		X		I		T		1		4					
49.2	7.5	1.7	8.7	2.4	1.8	2.0	7.5	15.0	4.5	2.6	14.1	15.0				
	O		'		F		a		l		l		o		n	
17.2	13.4	2.3	3.2	2.9	11.8	2.9	10.5	6.4	3.2	6.4	3.2	5.0	10.9	4.9	10.6	17.2
	⇗															
54.2	23.6	54.2														

SIGN ID #35
STA 655+00 EASTBOUND
EXISTING GUIDE SIGN ON STRUCTURAL STEEL SIGN SUPPORTS
PROPOSED GUIDE SIGN ON STRUCTURAL STEEL SIGN SUPPORTS

SIGN PANEL REMOVAL - TYPE 3, 93.1 SF
REMOVE GROUND MOUNTED SIGN SUPPORTS - 2 EA
SIGN PANEL - TYPE 3, 99 SF

MODEL: Sheet-36
FILE NAME: pw://cdmsmith-az02-pw.bentley.com:pw_pl1/Documents/338073/292457/10 Transportation/02 Engineering Services/01 Roadway/10 BIM_CADD/01 Working/Sheets/76R99-sht-details_signing panels.dgn

CDM Smith	USER NAME = PELLOTCA	DESIGNED - CAP	REVISED -	STATE OF ILLINOIS DEPARTMENT OF TRANSPORTATION	SIGNING PLANS	F.A.I. RTE.	SECTION	COUNTY	TOTAL SHEETS	SHEET NO.
		DRAWN - CAP	REVISED -			64	82-(4,5,6,7)-1RS-2	ST. CLAIR	388	248
	PLOT SCALE = 0.16666633 ' / in.	CHECKED - AAC	REVISED -					CONTRACT NO. 76R99		
	PLOT DATE = 11/13/2024	DATE - 09/09/2024	REVISED -		SCALE: NONE SHEET 248 OF 388 SHEETS STA. TO STA.			ILLINOIS FED. AID PROJECT		



SIGN ID #36
STA 706+00 EASTBOUND
EXISTING GUIDE SIGN ON STRUCTURAL STEEL SIGN SUPPORTS
PROPOSED GUIDE SIGN ON STRUCTURAL STEEL SIGN SUPPORTS

SIGN PANEL REMOVAL - TYPE 3, 139.8 SF
REMOVE GROUND MOUNTED SIGN SUPPORTS - 2 EA
SIGN PANEL - TYPE 3, 270 SF

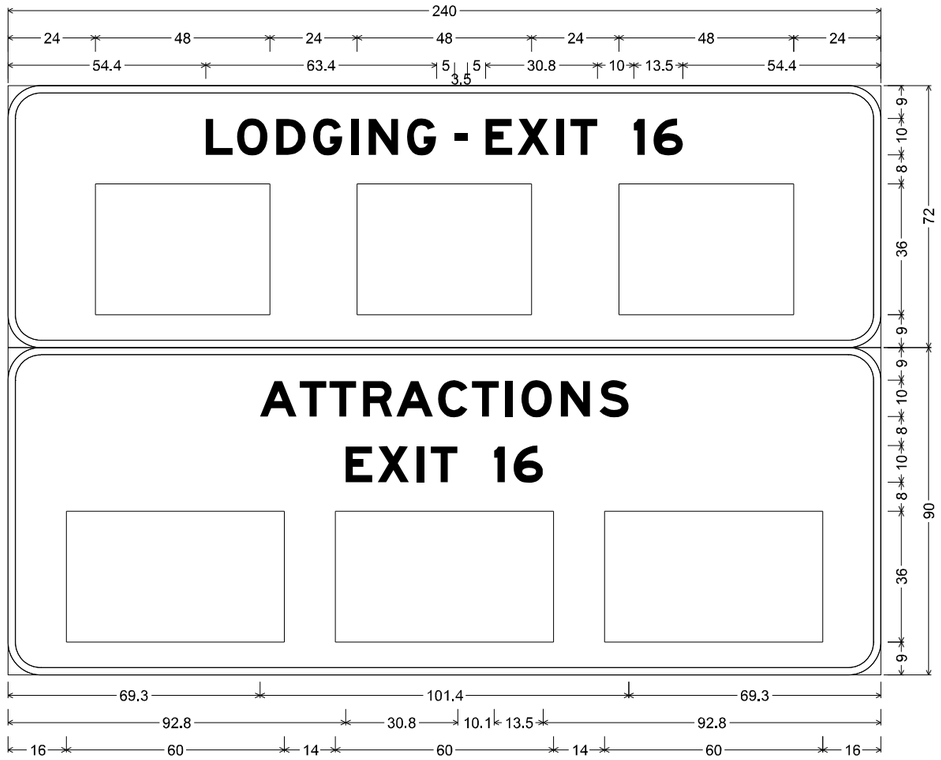

9.0" Radius, 2.0" Border, White on, Blue;
"LODGING", E Mod 2K; "-", E Mod 2K; "EXIT 16", E Mod 2K;

9.0" Radius, 2.0" Border, White on, Blue;
"ATTRACTIONS", E Mod 2K; "EXIT 16", E Mod 2K;
Table of widths and spaces

54.4	L 7.4	1.2	O 8.4	2.4	D 8.1	2.0	G 8.1	2.4	I 2.0	2.8	N 8.1	2.4	G 8.1	5.0	- 3.5	5.0	E 7.4	1.4	X 8.7	2.1	I 2.0	1.8	T 7.4						
	10.0	1 3.0	2.4	6 8.1	54.4																								
24.0	□ 48.0	24.0	□ 48.0	24.0	□ 48.0	24.0																							
69.3	A 10.1	0.8	T 7.4	0.8	T 7.4	1.8	R 8.1	1.1	A 10.1	1.4	C 8.1	1.2	T 7.4	1.8	I 2.0	2.4	O 8.4	2.4	N 8.1	2.5	S 8.1	69.3							
92.8	E 7.4	1.4	X 8.7	2.1	I 2.0	1.8	T 7.4	10.1	1 3.0	2.4	6 8.1	92.8																	
16.0	□ 60.0	14.0	□ 60.0	14.0	□ 60.0	16.0																							

MODEL: Sheet>37
FILE NAME: pw://cdmsmith-w2022-ew.eastlley.com:pw_p11/Documents/338073/2924577/10 Transportation/02 Engineering Services/01 Roadway/10 BM CADD/01 Working/Sheets/76R99-sht-details_signing panels.dgn

CDM Smith

USER NAME = PELLOTCA	DESIGNED - CAP	REVISED -	STATE OF ILLINOIS DEPARTMENT OF TRANSPORTATION	SIGNING PLANS
	DRAWN - CAP	REVISED -		
PLOT SCALE = 0.16666633 ' / in.	CHECKED - AAC	REVISED -		SCALE: NONE
PLOT DATE = 11/13/2024	DATE - 09/09/2024	REVISED -		SHEET 249 OF 388 SHEETS

STA. TO STA.

F.A.I. RTE.	SECTION	COUNTY	TOTAL SHEETS	SHEET NO.
64	82-(4,5,6,7)-1RS-2	ST. CLAIR	388	249
		CONTRACT NO. 76R99		
	ILLINOIS	FED. AID PROJECT		



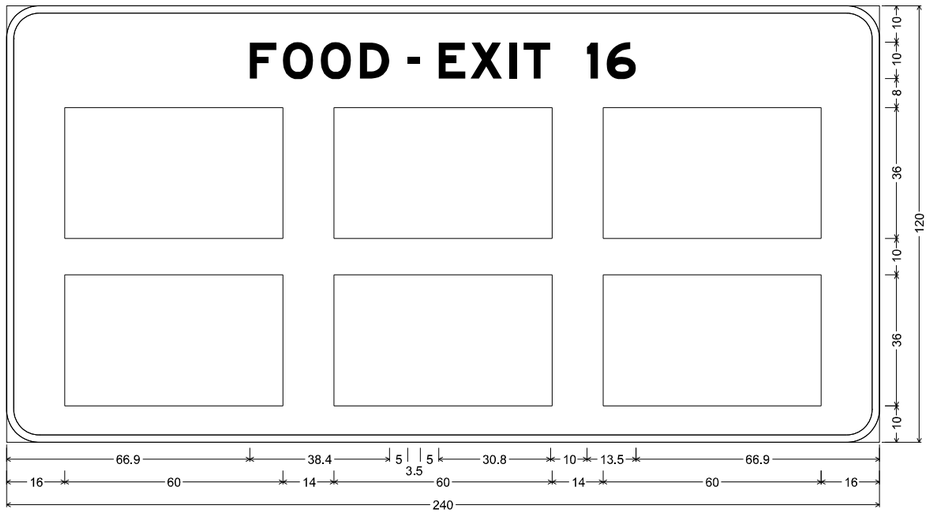

9.0" Radius, 2.0" Border, White on, Blue;
"FOOD", E Mod 2K; "-", E Mod 2K; "EXIT 16", E Mod 2K;
Table of widths and spaces

	F		O		O		D		-		E		X		I		T		1		6	
66.9	7.4	1.7	8.4	2.0	8.4	2.4	8.1	5.0	3.5	5.0	7.4	1.4	8.7	2.1	2.0	1.8	7.4	10.0	3.0	2.4	8.1	66.9

16.0	60.0	14.0	60.0	14.0	60.0	16.0
16.0	60.0	14.0	60.0	14.0	60.0	16.0

SIGN ID #37
STA 690+00 EASTBOUND
EXISTING GUIDE SIGN ON STRUCTURAL STEEL SIGN SUPPORTS
PROPOSED GUIDE SIGN ON STRUCTURAL STEEL SIGN SUPPORTS

SIGN PANEL REMOVAL - TYPE 3, 185.3 SF
REMOVE GROUND MOUNTED SIGN SUPPORTS - 2 EA
SIGN PANEL - TYPE 3, 200 SF

MODEL: Sign 37
FILE NAME: pw://cdmsmith-az02-pw.bentley.com:pw_pl1/Documents/338073/292457/10 Transportation/02 Engineering Services/01 Roadway/10 BIM_CADD/01 Working/Sheets/76R99-sht-details_signing panels.dgn

CDM Smith	USER NAME = PELLOTCA	DESIGNED - CAP	REVISED -	STATE OF ILLINOIS DEPARTMENT OF TRANSPORTATION	SIGNING PLANS
		DRAWN - CAP	REVISED -		
	PLOT SCALE = 0.16666633 ' / in.	CHECKED - AAC	REVISED -		
	PLOT DATE = 11/13/2024	DATE - 09/09/2024	REVISED -		SCALE: NONE SHEET 250 OF 388 SHEETS STA. TO STA.

F.A.I. RTE.	SECTION	COUNTY	TOTAL SHEETS	SHEET NO.
64	82-(4,5,6,7)-1RS-2	ST. CLAIR	388	250
		CONTRACT NO. 76R99		
		ILLINOIS FED. AID PROJECT		



SIGN ID #38
STA 526+75 EASTBOUND
EXISTING STANDARD SIGN ON WOOD SIGN SUPPORTS
PROPOSED STANDARD SIGN E5-1a, 6.5 x 5', ON NEW WOOD SIGN SUPPORTS
"12" (2 DIGIT EXIT NUMBER)

SIGN PANEL REMOVAL - TYPE 3, 30 SF
REMOVE GROUND MOUNTED SIGN SUPPORTS - 2 EA
SIGN PANEL - TYPE 3, 32.5 SF
WOOD SIGN SUPPORT, 34'

MODEL: Sign 38
FILE NAME: pw://cdmsmith-az02-pw.bentley.com:pw_pl1/Documents/338073/292457/10 Transportation/02 Engineering Services/01 Roadway/10 BIM_CADD/01 Working/Sheets/76R99-sht-details_signing panels.dgn

CDM Smith

USER NAME = PELLOTCA	DESIGNED - CAP	REVISED -	
	DRAWN - CAP	REVISED -	
PLOT SCALE = 0.16666633 ' / in.	CHECKED - AAC	REVISED -	
PLOT DATE = 11/13/2024	DATE - 09/09/2024	REVISED -	

STATE OF ILLINOIS
DEPARTMENT OF TRANSPORTATION

SIGNING PLANS

SCALE: NONE | SHEET 251 OF 388 SHEETS | STA. | TO STA.

F.A.I. RTE.	SECTION	COUNTY	TOTAL SHEETS	SHEET NO.
64	82-(4,5,6,7)-1RS-2	ST. CLAIR	388	251

CONTRACT NO. 76R99
ILLINOIS | FED. AID PROJECT



SIGN ID #39
STA 547+40 WESTBOUND
EXISTING STANDARD SIGN ON WOOD SIGN SUPPORTS
PROPOSED STANDARD SIGN E5-1a, 6.5 x 5', ON NEW WOOD SIGN SUPPORTS
"12" (2 DIGIT EXIT NUMBER)

SIGN PANEL REMOVAL - TYPE 3, 30 SF
REMOVE GROUND MOUNTED SIGN SUPPORTS - 2 EA
SIGN PANEL - TYPE 3, 32.5 SF
WOOD SIGN SUPPORT, 34'

MODEL: Sign 39
FILE NAME: pw://cdmsmith-az02-pw.bentley.com:pw_pl1/Documents/338073/292457/10 Transportation/02 Engineering Services/01 Roadway/10 BIM_CADD/01 Working/Sheets/76R99-sht-details_signing panels.dgn

CDM Smith

USER NAME = PELLOTCA	DESIGNED - CAP	REVISED -	
	DRAWN - CAP	REVISED -	
PLOT SCALE = 0.16666633 ' / in.	CHECKED - AAC	REVISED -	
PLOT DATE = 11/13/2024	DATE - 09/09/2024	REVISED -	

STATE OF ILLINOIS
DEPARTMENT OF TRANSPORTATION

SIGNING PLANS

SCALE: NONE | SHEET 252 OF 388 SHEETS | STA. | TO STA.

F.A.I. RTE.	SECTION	COUNTY	TOTAL SHEETS	SHEET NO.
64	82-(4,5,6,7)-1RS-2	ST. CLAIR	388	252

CONTRACT NO. 76R99
ILLINOIS | FED. AID PROJECT



SIGN ID #40
STA 662+15 EASTBOUND
EXISTING STANDARD SIGN ON WOOD SIGN SUPPORTS
PROPOSED STANDARD SIGN E5-1a, 6.5 x 5', ON NEW WOOD SIGN SUPPORTS
"14" (2 DIGIT EXIT NUMBER)

SIGN PANEL REMOVAL - TYPE 3, 30 SF
REMOVE GROUND MOUNTED SIGN SUPPORTS - 2 EA
SIGN PANEL - TYPE 3, 32.5 SF
WOOD SIGN SUPPORT, 34'

MODEL: Sign 40
FILE NAME: pw://cdmsmith-na02-pw.bentley.com:pw_p11/Documents/338073/292457/10 Transportation/02 Engineering Services/01 Roadway/10 BIM - CADD/01 Working/Sheets/76R99-sht-details_signing panels.dgn

CDM Smith

USER NAME = PELLOTCA	DESIGNED - CAP	REVISED -	
	DRAWN - CAP	REVISED -	
PLOT SCALE = 0.16666633 ' / in.	CHECKED - AAC	REVISED -	
PLOT DATE = 11/13/2024	DATE - 09/09/2024	REVISED -	

STATE OF ILLINOIS
DEPARTMENT OF TRANSPORTATION

SIGNING PLANS

SCALE: NONE | SHEET 253 OF 388 SHEETS | STA. | TO STA.

F.A.I. RTE.	SECTION	COUNTY	TOTAL SHEETS	SHEET NO.
64	82-(4,5,6,7)-1RS-2	ST. CLAIR	388	253
		CONTRACT NO. 76R99		
	ILLINOIS FED. AID PROJECT			



SIGN ID #41
STA 696+50 EASTBOUND
EXISTING STANDARD SIGN ON WOOD SIGN SUPPORTS
PROPOSED STANDARD SIGN E5-1a, 6.5 x 5', ON NEW WOOD SIGN SUPPORTS
"14" (2 DIGIT EXIT NUMBER)

SIGN PANEL REMOVAL - TYPE 3, 30 SF
REMOVE GROUND MOUNTED SIGN SUPPORTS - 2 EA
SIGN PANEL - TYPE 3, 32.5 SF
WOOD SIGN SUPPORT, 34'

MODEL: Sign 41
FILE NAME: pw://cdmsmith-us02-pw.bentley.com:pw_all/Documents/338073/23245710 Transportation/02 Engineering Services/01 Roadway/10 BIM_CADD/01 Working/Sheets/76R99-sht-details_signing panels.dgn

CDM Smith

USER NAME = PELLOTCA	DESIGNED - CAP	REVISED -	**STATE OF ILLINOIS**	**SIGNING PLANS**
	DRAWN - CAP	REVISED -	**DEPARTMENT OF TRANSPORTATION**	
PLOT SCALE = 0.16666633 ' / in.	CHECKED - AAC	REVISED -		
PLOT DATE = 11/13/2024	DATE - 09/09/2024	REVISED -		

SCALE: NONE | SHEET 254 OF 388 SHEETS | STA. | TO STA.

F.A.I. RTE.	SECTION	COUNTY	TOTAL SHEETS	SHEET NO.
64	82-(4,5,6,7)-1RS-2	ST. CLAIR	388	254
		CONTRACT NO. 76R99		
	ILLINOIS FED. AID PROJECT			





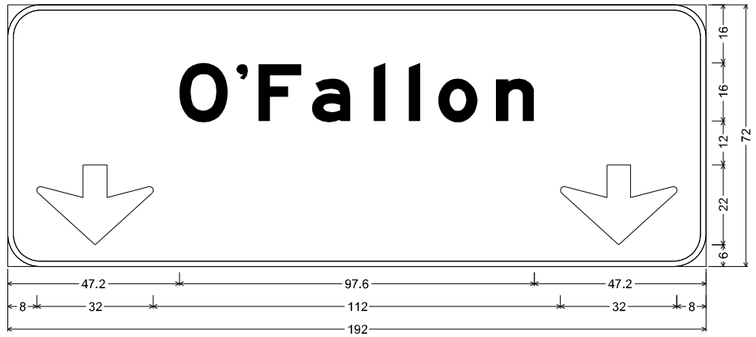

9.0" Radius, 1.5" Border, White on, Green;
"O'Fallon", E Mod 2K; Down Arrow 22.0" 270'; Down Arrow 22.0" 270';
Table of widths and spaces

	O		.		F		a		l		l		o		n	
47.2	13.4	2.3	3.2	2.9	11.8	2.9	10.5	6.4	3.2	6.4	3.2	5.0	10.9	4.9	10.6	47.2

8.0	32.0	112.0	32.0	8.0

SIGN ID #42
STA 14+33, EXIT 14 EB OFF RAMP
STRUCTURE #8S082I064R014.1
EXISTING GUIDE SIGNS ON EXISTING STRUCTURE
PROPOSED GUIDE SIGNS ON EXISTING STRUCTURE

SIGN PANEL REMOVAL - TYPE 3, 96 SF
SIGN PANEL - TYPE 3, 96 SF

MODEL: Sign 42
FILE NAME: pw://cdmsmith-eu02-pw.bentley.com:pw_01/Documents/338073/292457/10 Transportation/02 Engineering Services/01 Roadway/10 BIM - CADD/01 Working/Sheets/76R99-sht-details_signing panels.dgn

CDM Smith

USER NAME = PELLOTCA	DESIGNED - CAP	REVISED -	STATE OF ILLINOIS DEPARTMENT OF TRANSPORTATION	SIGNING PLANS
	DRAWN - CAP	REVISED -		
PLOT SCALE = 0.16666633 ' / in.	CHECKED - AAC	REVISED -		
PLOT DATE = 11/13/2024	DATE - 09/09/2024	REVISED -		SCALE: NONE SHEET 255 OF 388 SHEETS STA. TO STA.

F.A.I. RTE.	SECTION	COUNTY	TOTAL SHEETS	SHEET NO.
64	82-(4,5,6,7)-1RS-2	ST. CLAIR	388	255
		CONTRACT NO. 76R99		
	ILLINOIS	FED. AID PROJECT		





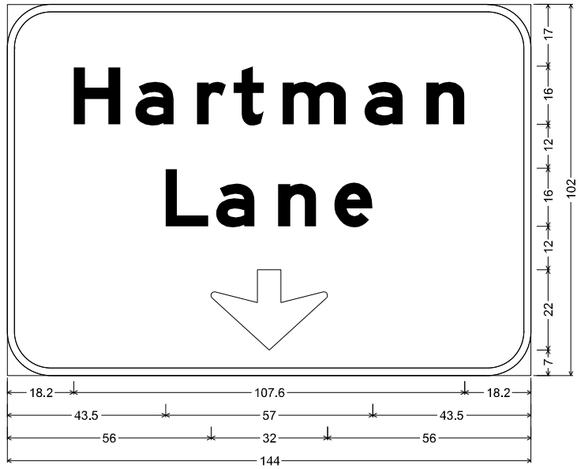

12.0" Radius, 2.0" Border, White on, Green;
"Hartman", E Mod 2K; "Lane", E Mod 2K; Down Arrow 22.0" 270';
Table of widths and spaces

18.2	H 13.0	4.0	a 10.6	6.4	r 8.0	2.0	t 8.4	5.1	m 17.6	4.9	a 10.6	6.4	n 10.6	18.2

43.5	L 11.9	2.0	a 10.6	6.4	n 10.6	4.9	e 10.6	43.5

56.0	32.0	56.0

SIGN ID #42a
STA 14+33, EXIT 14 EB OFF RAMP
STRUCTURE #8S082I064R014.1
EXISTING GUIDE SIGNS ON EXISTING STRUCTURE
PROPOSED GUIDE SIGNS ON EXISTING STRUCTURE

SIGN PANEL REMOVAL - TYPE 3, 102 SF
SIGN PANEL - TYPE 3, 102 SF

MODEL: Sign 42a
FILE NAME: pw://cdmsmith-az02-pw.bentley.com:pw_pl1/Documents/338073/292457/10 Transportation/02 Engineering Services/01 Roadway/10 BIM_CADD/01 Working/Sheets/76R99-sht-details_signing panels.dgn

CDM Smith	USER NAME = PELLOTCA	DESIGNED - CAP	REVISED -	STATE OF ILLINOIS DEPARTMENT OF TRANSPORTATION	SIGNING PLANS	F.A.I. RTE.	SECTION	COUNTY	TOTAL SHEETS	SHEET NO.
		DRAWN - CAP	REVISED -			64	82-(4,5,6,7)-1RS-2	ST. CLAIR	388	256
	PLOT SCALE = 0.16666633 ' / in.	CHECKED - AAC	REVISED -					CONTRACT NO. 76R99		
	PLOT DATE = 11/13/2024	DATE - 09/09/2024	REVISED -		SCALE: NONE SHEET 256 OF 388 SHEETS STA. TO STA.			ILLINOIS FED. AID PROJECT		





SIGN ID #42b
STA 14+33, EXIT 14 EB OFF RAMP
STRUCTURE #8S082I064R014.1
EXISTING GUIDE SIGNS ON EXISTING STRUCTURE
PROPOSED GUIDE SIGNS ON EXISTING STRUCTURE

SIGN PANEL REMOVAL - TYPE 3, 102 SF
SIGN PANEL - TYPE 3, 102 SF

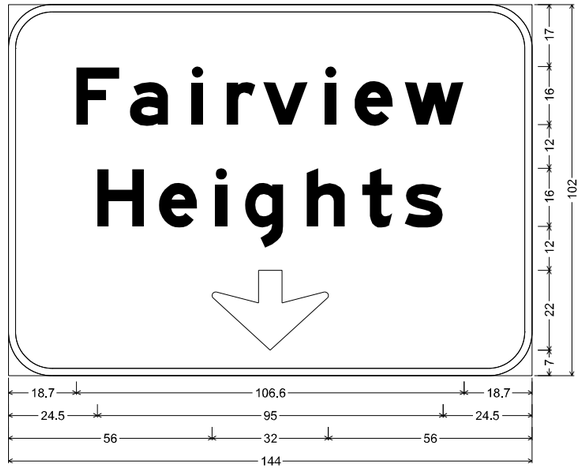

12.0" Radius, 2.0" Border, White on, Green;
"Fairview", E Mod 2K; "Heights", E Mod 2K; Down Arrow 22.0" 270';
Table of widths and spaces

18.7	**F** 11.9	2.8	**a** 10.6	6.4	**i** 3.2	6.4	**r** 8.0	2.1	**v** 12.3	4.6	**i** 3.2	5.0	**e** 10.6	3.2	**w** 16.3	18.7
24.5	**H** 12.9	4.0	**e** 10.6	5.0	**i** 3.2	4.9	**g** 10.6	6.4	**h** 10.5	4.7	**t** 8.3	3.4	**s** 10.5	24.5		
56.0	32.0	56.0														

MODEL: Sign 42b
FILE NAME: pw://cdmsmith-a302-ew.bentley.com:pw_e11/Documents/338073/29245710 Transportation\02 Engineering Services\01 Roadway\10 BIM_CADD\01 Working\Sheets\76R99-sht-details_signing panels.dgn

CDM Smith

USER NAME = PELLOTCA	DESIGNED - CAP	REVISED -	**STATE OF ILLINOIS**	**SIGNING PLANS**
	DRAWN - CAP	REVISED -	**DEPARTMENT OF TRANSPORTATION**	
PLOT SCALE = 0.16666633 ' / in.	CHECKED - AAC	REVISED -		SCALE: NONE | SHEET 257 OF 388 SHEETS | STA. | TO STA.
PLOT DATE = 11/13/2024	DATE - 09/09/2024	REVISED -		

F.A.I. RTE.	SECTION	COUNTY	TOTAL SHEETS	SHEET NO.
64	82-(4,5,6,7)-1RS-2	ST. CLAIR	388	257
		CONTRACT NO. 76R99		
	ILLINOIS | FED. AID PROJECT			

SIGN ID #43
STA 712+00 WESTBOUND
PROPOSED GUIDE SIGN ON STRUCTURAL STEEL SIGN SUPPORTS

SIGN PANEL - TYPE 3, 90 SF

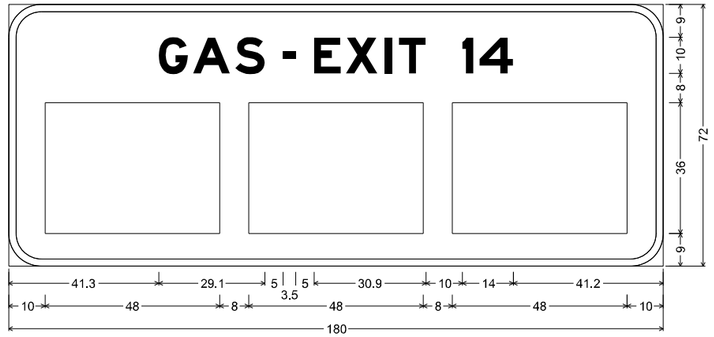

9.0" Radius, 2.0" Border, White on, Blue;
"GAS", E Mod 2K; "-", E Mod 2K; "EXIT 14", E Mod 2K;
Table of widths and spaces

41.3	**G** 8.1	1.3	**A** 10.1	1.5	**S** 8.1	5.0	**-** 3.5	5.0	**E** 7.4	1.4	**X** 8.7	2.1	**I** 2.0	1.9	**T** 7.4	10.0	**I** 3.0	1.7	**4** 9.3	41.2

10.0	□ 48.0	8.0	□ 48.0	8.0	□ 48.0	10.0

MODEL: Sign 43
FILE NAME: pw://cdmsmith-eu02-pw.bentley.com:pw_01/Documents/338073/292457/10 Transportation/02 Engineering Services/01 Roadway/10 BIM_CADD/01 Working/Sheets/76R99-sht-details_signing panels.dgn

CDM Smith

USER NAME = PELLOTCA	DESIGNED - CAP	REVISED -	**STATE OF ILLINOIS**	**SIGNING PLANS**
	DRAWN - CAP	REVISED -	**DEPARTMENT OF TRANSPORTATION**	
PLOT SCALE = 0.16666633 ' / in.	CHECKED - AAC	REVISED -		SCALE: NONE | SHEET 258 OF 388 SHEETS | STA. | TO STA.
PLOT DATE = 11/13/2024	DATE - 09/09/2024	REVISED -		

F.A.I. RTE.	SECTION	COUNTY	TOTAL SHEETS	SHEET NO.
64	82-(4,5,6,7)-1RS-2	ST. CLAIR	388	258
		CONTRACT NO. 76R99		
	ILLINOIS FED. AID PROJECT			

SIGN ID #44
STA 648+00 EASTBOUND
PROPOSED GUIDE SIGN ON STRUCTURAL STEEL SIGN SUPPORTS

SIGN PANEL - TYPE 3, 90 SF

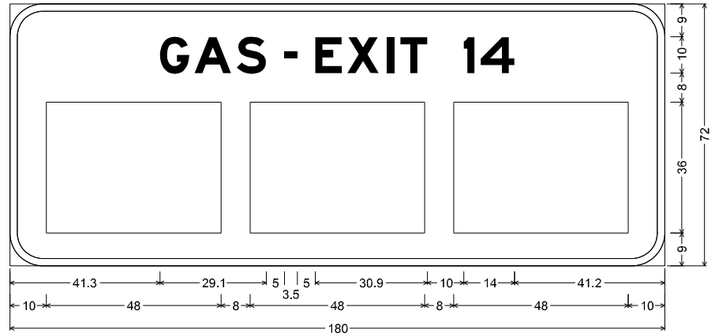

9.0" Radius, 2.0" Border, White on, Blue;
"GAS", E Mod 2K; "-", E Mod 2K; "EXIT 14", E Mod 2K;
Table of widths and spaces

	G		A		S		-		E		X		I		T		1		4	
41.3	8.1	1.3	10.1	1.5	8.1	5.0	3.5	5.0	7.4	1.4	8.7	2.1	2.0	1.9	7.4	10.0	3.0	1.7	9.3	41.2

10.0	□ 48.0	8.0	□ 48.0	8.0	□ 48.0	10.0

MODEL: Sign 44
FILE NAME: pw://cdmsmith-az02-pw.bentley.com:pw_pl1/Documents/338073/292457/10 Transportation/02 Engineering Services/01 Roadway/10 BIM_CADD/01 Working/Sheets/76R99-sht-details_signing panels.dgn

CDM Smith

USER NAME = PELLOTCA	DESIGNED - CAP	REVISED -	
	DRAWN - CAP	REVISED -	
PLOT SCALE = 0.16666633 ' / in.	CHECKED - AAC	REVISED -	
PLOT DATE = 11/13/2024	DATE - 09/09/2024	REVISED -	

STATE OF ILLINOIS
DEPARTMENT OF TRANSPORTATION

SIGNING PLANS

SCALE: NONE | SHEET 259 OF 388 SHEETS | STA. | TO STA.

F.A.I. RTE.	SECTION	COUNTY	TOTAL SHEETS	SHEET NO.
64	82-(4,5,6,7)-1RS-2	ST. CLAIR	388	259
		CONTRACT NO. 76R99		
		ILLINOIS	FED. AID PROJECT	

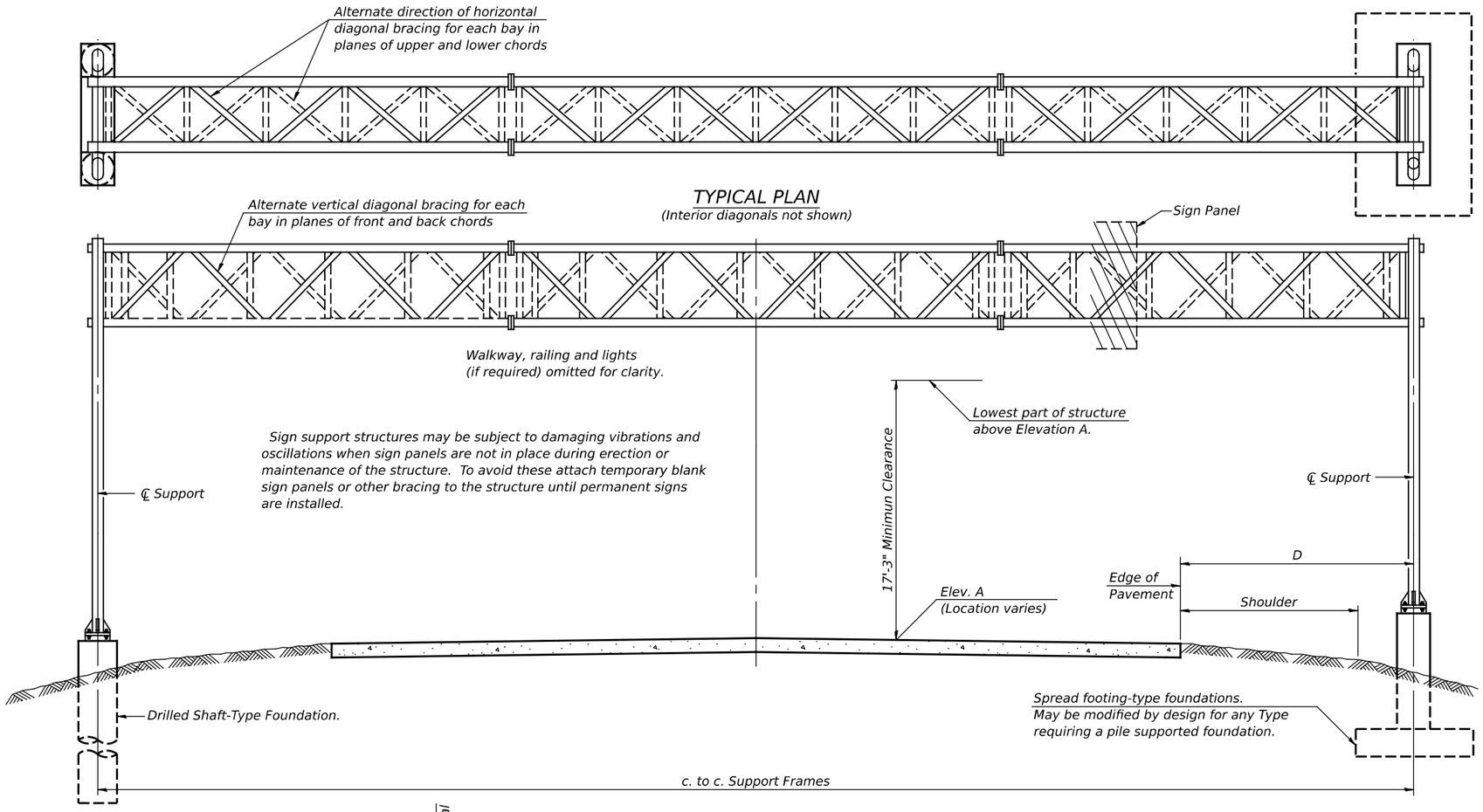

TYPICAL PLAN
(Interior diagonals not shown)

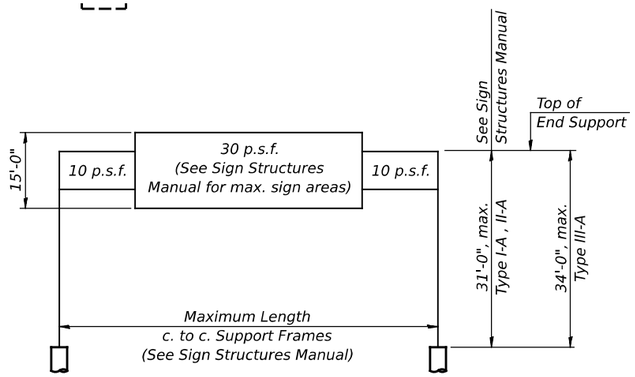

DESIGN WIND LOADING DIAGRAM

Parameters shown are basis for I.D.O.T. Standards and Sign Manual Tables. Installations not within dimensional limits shown require special analysis for all components.

TYPICAL ELEVATION
(Looking at Face of Signs**)

Elev. A = Elevation at point of minimum clearance to sign, walkway support or truss.

** *Looking upstation for structures with signs both sides.*

* *If M270 Gr. 50W (M222) steel is proposed, chemistry for plate to be used shall first be approved by the Engineer as suitable for galvanizing and welding.*

GENERAL NOTES

DESIGN: AASHTO Standard Specifications for Structural Supports for Highway Signs, Luminaires and Traffic Signals. ("AASHTO Specifications")

CONSTRUCTION: Current (at time of letting) Illinois Department of Transportation Standard Specifications for Road and Bridge Construction, Supplemental Specifications and Special Provisions. ("Standard Specifications")

LOADING: 90 M.P.H. WIND VELOCITY

WALKWAY LOADING: Dead load plus 500 lbs. concentrated live load.

DESIGN STRESSES:
Field Units
f'c = 3,500 p.s.i.
fy = 60,000 p.s.i. (reinforcement)

WELDING: All welds to be continuous unless otherwise shown. All welding to be done in accordance with current AWS D1.1 and D1.2 Structural Welding Codes (Steel and Aluminum) and the Standard Specificiations.

MATERIALS: Aluminum Alloys as shown throughout plans. All Structural Steel Pipe shall be ASTM A53 Grade B or A500 Grade B or C. If A500 pipe is substituted for A53, then the outside diameter shall be as detailed and wall thickness greater than or equal to A53. All Structural Steel Plates and Shapes shall conform to AASHTO M270 Gr. 36, Gr. 50 or Gr. 50W. Stainless steel for shims, sleeves and handhole covers shall be ASTM A240, Type 302 or 304, or another alloy suitable for exterior exposure and acceptable to the Engineer.*
The steel pipe and stiffening ribs at the base plate for the column shall have a minimum longitudinal Charpy V-Notch (CVN) energy of 15 lb.-ft. at 40° F. (Zone 2) before galvanizing.

FASTENERS FOR ALUMINUM TRUSSES: All bolts noted as "high strength" must satisfy the requirements of AASHTO M164 (ASTM A325), or approved alternate, and must have matching lock nuts. Threaded studs for splices (if Members interfere) must satisfy the requirements of ASTM A449, ASTM A193, Grade B7, or approved alternate, and must have matching lock nuts. Bolts and lock nuts not required to be high strength must satisfy the requirements of ASTM A307. All bolts and lock nuts must be hot dip galvanized per AASHTO M232. The lock nuts must have nylon or steel inserts. A stainless steel flat washer conforming to ASTM A240 Type 302 or 304, is required under both head and nut or under both nuts where threaded studs are used. High strength bolt installation shall conform to Article 505.04 (f) (2)d of the IDOT Standard Specifications for Road and Bridge Construction. Rotational capacity ("ROCAP") testing of bolts will not be required.

U-BOLTS AND EYEBOLTS: U-Bolts and Eyebolts must be produced from ASTM A276 Type 304, 304L, 316 or 316L, Condition A, cold finished stainless steel, or an equivalent material acceptable to the Engineer. All nuts for U-Bolts and Eyebolts must be lock nuts equivalent to ASTM A307 with nylon or steel inserts and hot dip galvanized per AASHTO M232. A stainless steel flat washer conforming to ASTM A240, Type 302 or 304, is required under each U-Bolt and Eyebolt lock nut.

GALVANIZING: All Steel Grating, Plates, Shapes and Pipe shall be Hot Dip Galvanized after fabrication in accordance with AASHTO M111. Painting is not permitted.

ANCHOR RODS: Shall conform to ASTM F1554 Gr. 105.

CONCRETE SURFACES: All concrete surfaces above an elevation 6" below the lowest final ground line at each foundation shall be cleaned and coated with Concrete Sealer in accordance with the Standard Specifications.

REINFORCEMENT BARS: Reinforcement Bars designated (E) shall be epoxy coated in accordance with the Standard Specifications.

FOUNDATIONS: The contract unit price for Concrete Foundations and Drilled Shaft Concrete Foundations shall include reinforcement bars complete in place.

TYPICAL SPAN TRUSS FOR REFERENCE ONLY

OS-A-1 5-15-2023

ABNA DESIGN FIRM REG. 184.002117

USER NAME =	DESIGNED - SEA	REVISED -
	CHECKED - FH	REVISED -
PLOT SCALE =	DRAWN - MBJ	REVISED -
PLOT DATE =	CHECKED - SEA	REVISED -

STATE OF ILLINOIS
DEPARTMENT OF TRANSPORTATION

OVERHEAD SIGN STRUCTURES - GENERAL PLAN & ELEVATION - ALUMINUM TRUSS & STEEL SUPPORTS

SHEET 2 OF 9 SHEETS

F.A.I. RTE.	SECTION	COUNTY	TOTAL SHEETS	SHEET NO.
64	82-(4,5,6,7)-1R-2	ST CLAIR	386	260
		CONTRACT NO. 76R99		
	ILLINOIS	FED. AID PROJECT		

MODEL: Default
FILE NAME: J:\2023\6044\WO SI\Engineering\OHSS SHEETS\D876R99-002-GEN PLAN.dgn
11/13/2024 6:28:31 AM

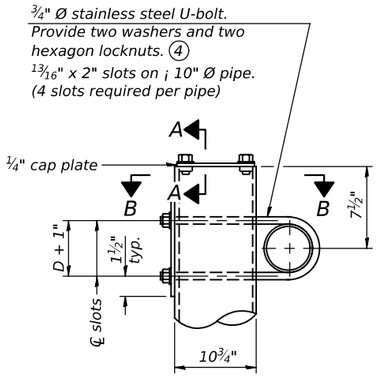

DETAIL A

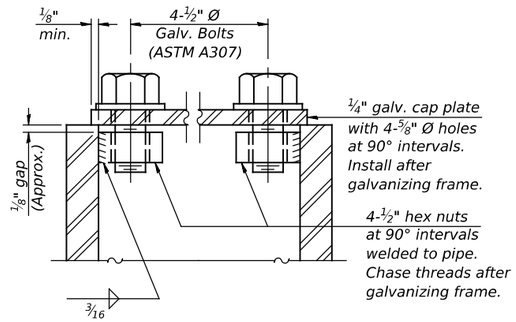

SECTION A-A

As an alternate to bolts, may use galvanized drive-fit caps installed after galvanizing frame.

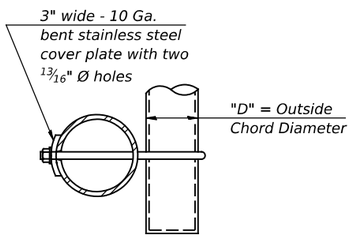

SECTION B-B

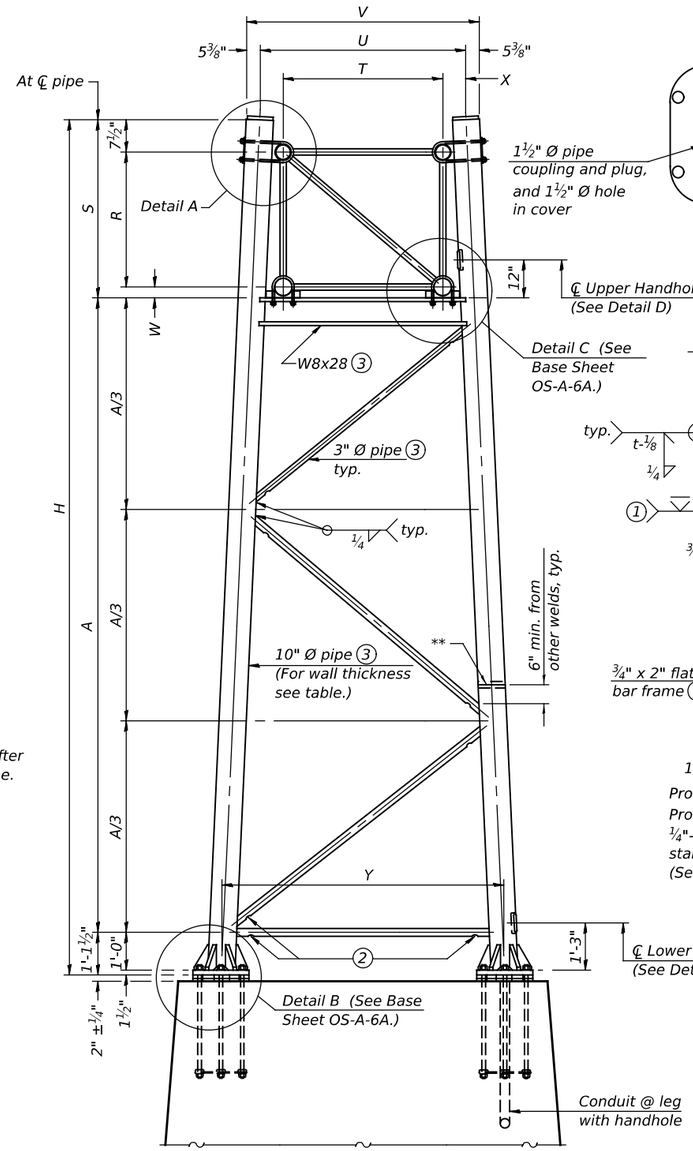

For Foundation Details, see base sheet OS-F3 (Spread Footing) or OS4-F3 (Drilled Shaft).

SIDE ELEVATION

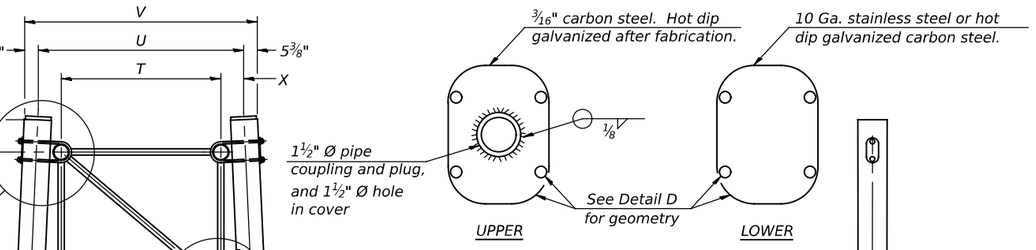

HANDHOLE COVERS

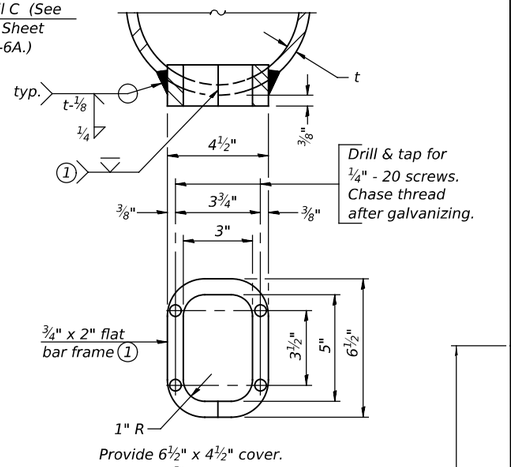

Provide 6½" x 4½" cover.
Provide 4-5/16" Ø holes in cover for ¼"-20 round head hot dip galvanized or stainless steel machine screws. (See cover details)

DETAIL D

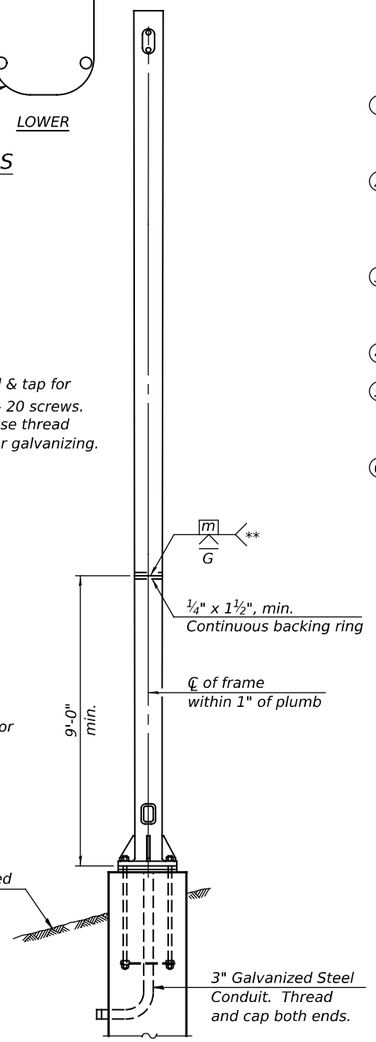

END ELEVATION

Support Design Loads: See Base Sheet OS-A-1 for design and loading criteria.
Load combinations checked include deadload plus:
a) 100% wind normal to sign, 20% parallel to sign
b) 60% wind normal to sign, 30% parallel to sign

1. *In lieu of fabricated handhole frame as shown, may cut from 2" plate (rolling direction vertical). All cut faces to be ground to ANSI Roughness of 500µ in or less.*
2. *Galvanizing vent holes of adequate size shall be provided on underside at each end of bracing pipes. Alternately, holes may be provided in wall of pipe column. All vent holes shall be drilled and de-burred, typ.*
3. *Steel pipe, plate, carbon steel handhole covers and rolled sections shall be hot dip galvanized after fabrication. Painting is not permitted. See Base Sheet OS-A-1.*
4. *See General Notes for fasteners.*
5. *Dimensions shown are based on selection criteria in the Sign Structures Manual. Nonstandard applications must have dimensions verified or amended as appropriate.*
6. *"H" based on 15'-0" or actual sign height, whichever is greater.*

Truss Type	Dimensions							
	R	S	T	U	V	W	X	Y
I-A	4'-6"	5'-5½"	4'-0"	5'-6"	6'-4¾"	4"	9"	8'-3"
II-A (5)	5'-3"	6'-3¼"	4'-6"	6'-1"	6'-11¾"	4¾"	9½"	8'-3"

10" Ø PIPE TRUSS SUPPORT FRAME

** *One butt welded joint is allowed only on one post per support frame. If used, weld procedure must be pre-approved by Engineer and joint shall receive 100% RT or UT (tension criteria) at Contractor's expense.*

OS-A-6 5-15-2023

ABNA DESIGN FIRM REG. 184.002117

USER NAME =	DESIGNED - SEA	REVISED -
	CHECKED - FH	REVISED -
PLOT SCALE =	DRAWN - MBJ	REVISED -
PLOT DATE =	CHECKED - SEA	REVISED -

STATE OF ILLINOIS
DEPARTMENT OF TRANSPORTATION

OVERHEAD SIGN STRUCTURES
REPAIR F: HAND HOLE COVER & REPAIR I: CONDUIT PLUGS
SHEET 3 OF 9 SHEETS

F.A.I. RTE.	SECTION	COUNTY	TOTAL SHEETS	SHEET NO.
64	82-(4,5,6,7)-1R-2	ST CLAIR	386	261
		CONTRACT NO. 76R99		
	ILLINOIS	FED. AID PROJECT		

MODEL: Default
FILE NAME: J:\2023\6044\WO 5\Engineering\OHSS SHEETS\D876R99-006-OHSS_DETAILS.dgn
11/13/2024 6:28:32 AM

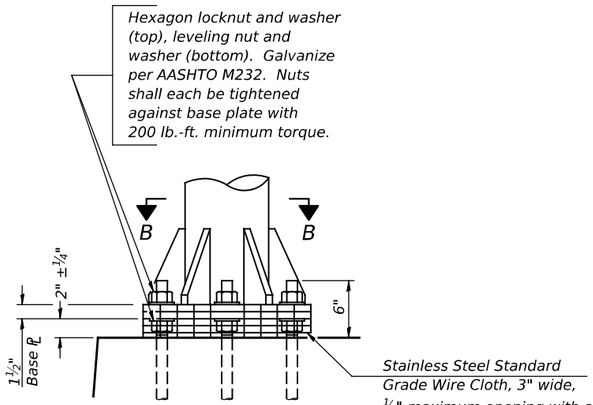

DETAIL B

Ribs shall be cut to fit slope of pipe.

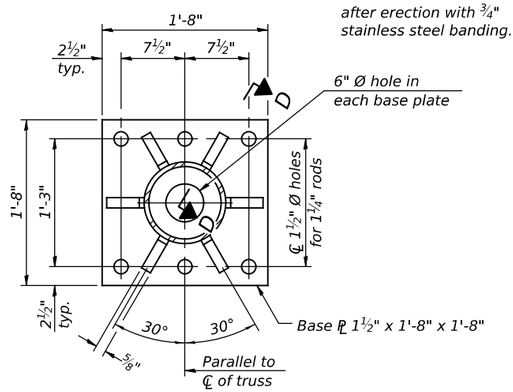

SECTION B-B

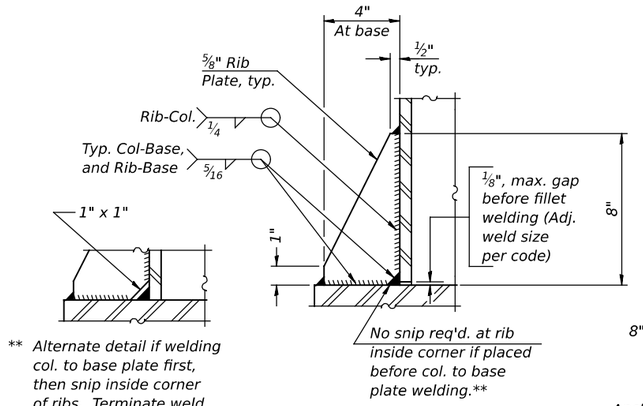

** Alternate detail if welding col. to base plate first, then snip inside corner of ribs. Terminate weld on rib ¼" from snip.

SECTION D-D

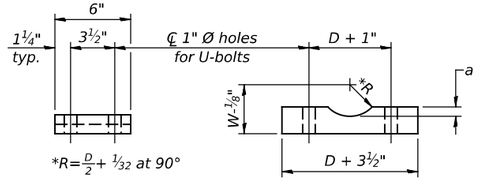

D = Outside Diameter of Chord.
For W, see Base Sheet OS-A-6.

SADDLE SHIM DETAIL

ASTM B26 Alloy 356-F
or
ASTM B209 Alloy 6061-T651
(4 required per sign truss)

Truss Chord Nominal Dia.	a
5"	¾"
5½"	13/16"
6"	⅞"
6½"	15/16"
7"	1"

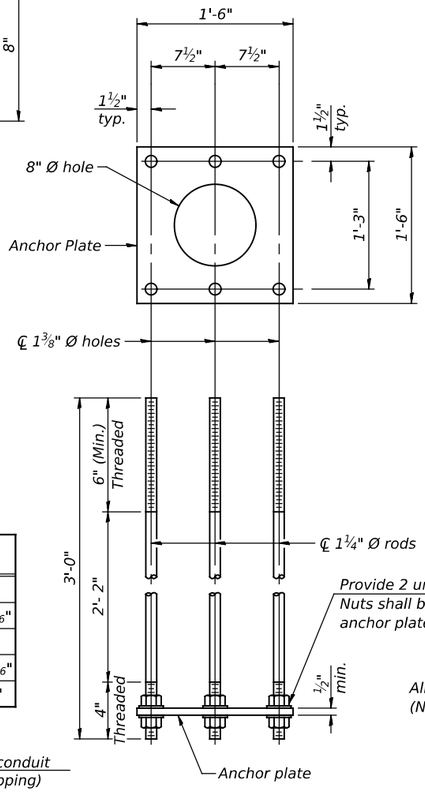

ANCHOR ROD DETAIL

Spread Footing Foundation

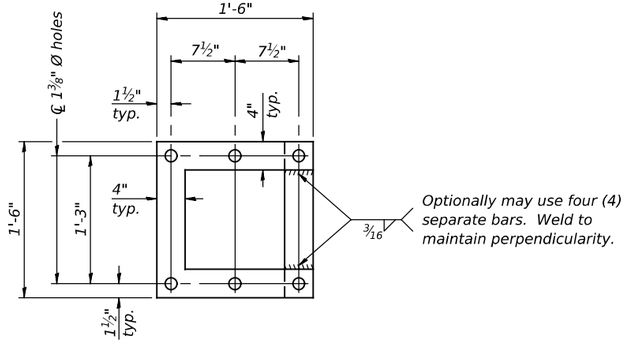

POSITIONING PLATE(S)

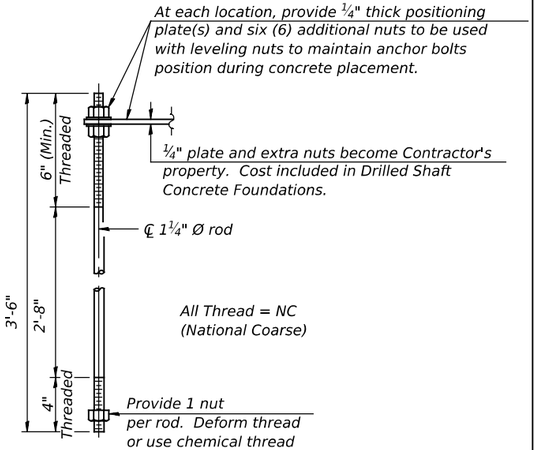

ANCHOR ROD DETAIL

Drilled Shaft Foundation

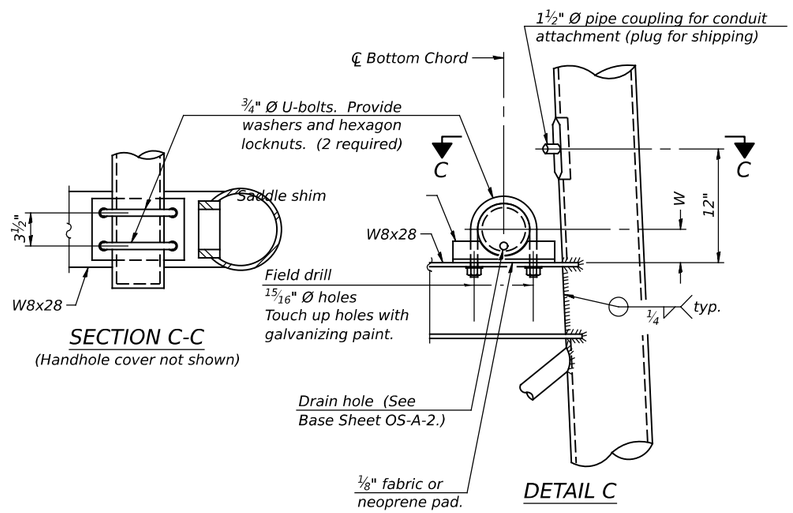

SECTION C-C

(Handhole cover not shown)

DETAIL C

Anchor rods shall conform to ASTM F1554 Grade 105. Galvanize upper 12" minimum per AASHTO M232. No welding shall be permitted on rods.

10" Ø PIPE SUPPORT FRAME DETAILS

OS-A-6A 5-15-2023

MODEL: Default
FILE NAME: I:\2023\6044WO 5\Engineering\OHSS SHEETS\D876R99-007-OHSS DETAILS.dgn
11/13/2024 6:28:33 AM

ABNA DESIGN FIRM REG. 184.002117

USER NAME =	DESIGNED - SEA	REVISED -
	CHECKED - FH	REVISED -
PLOT SCALE =	DRAWN - MBJ	REVISED -
PLOT DATE =	CHECKED - SEA	REVISED -

STATE OF ILLINOIS
DEPARTMENT OF TRANSPORTATION

OVERHEAD SIGN STRUCTURES
REPAIR B: TIGHTEN ANCHOR BOLTS
SHEET 4 OF 9 SHEETS

F.A.I. RTE.	SECTION	COUNTY	TOTAL SHEETS	SHEET NO.
64	82-(4,5,6,7)-1R-2	ST CLAIR	386	262
		CONTRACT NO. 76R99		
	ILLINOIS	FED. AID PROJECT		

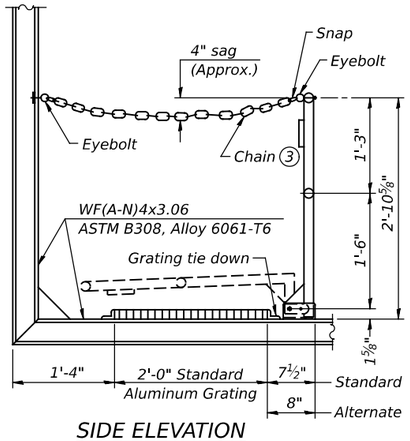

SIDE ELEVATION

(Showing safety chain w/o sign)

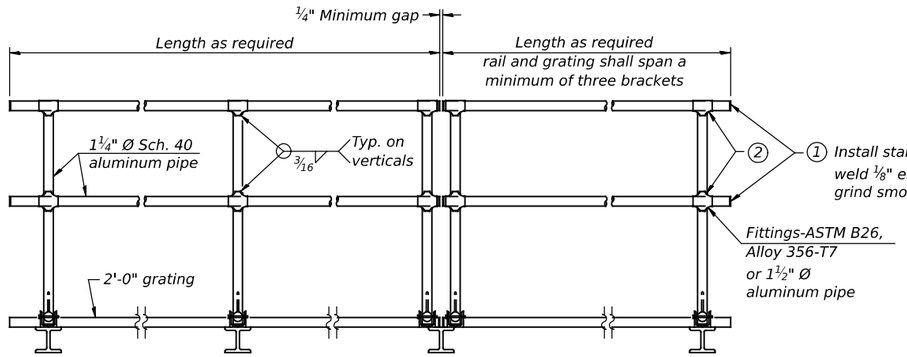

FRONT ELEVATION

(1) *Install standard force-fit end caps or weld ⅛" end plates with ⅛" c.f.w. and grind smooth. (All rail ends)*

(2) *Horizontal handrail member shall be continuous thru fitting. Provide 7/16" Ø hole in fitting for ⅜" Ø bolt. Field drill 7/16" Ø hole in horizontal rail member. Provide locknut and two stainless steel washers for bolt. (Use 5/16" eyebolts in 7/16"Ø holes on top rail at ends only.)*

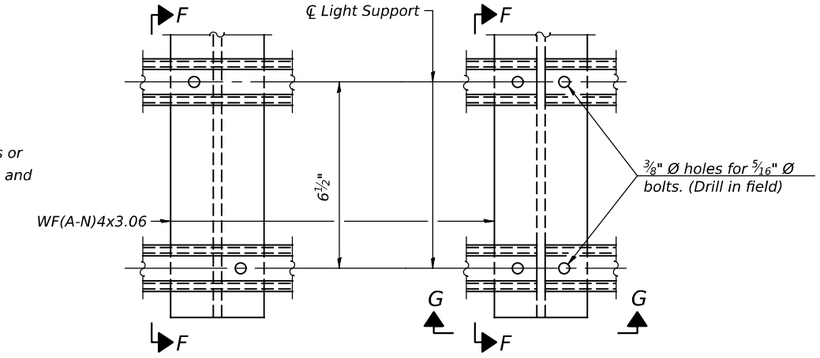

DETAIL F

DETAIL G

HANDRAIL DETAILS

Handrail pipe shall be ASTM B241 or B429, Alloy 6063-T6 or Alloy 6061-T6.

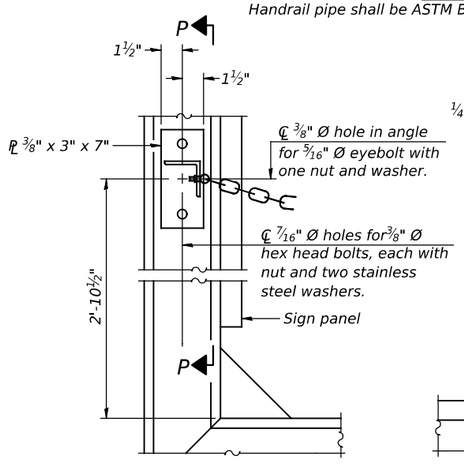

ALTERNATE SAFETY CHAIN ATTACHMENT

(With Sign Present)

Items not shown same as "Side Elevation" of "Handrail Details"

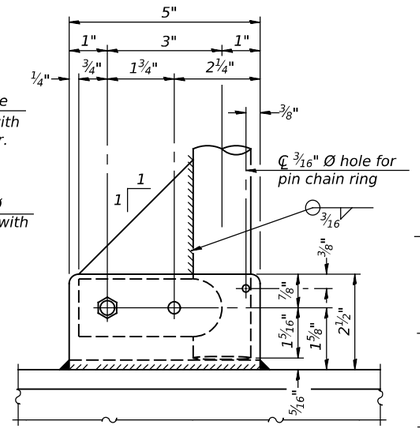

SIDE ELEVATION

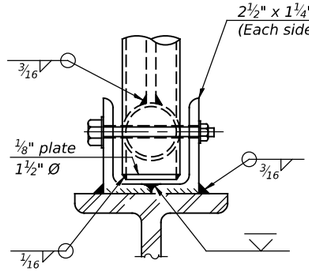

FRONT ELEVATION

See "Elevation" at right for dimensions.

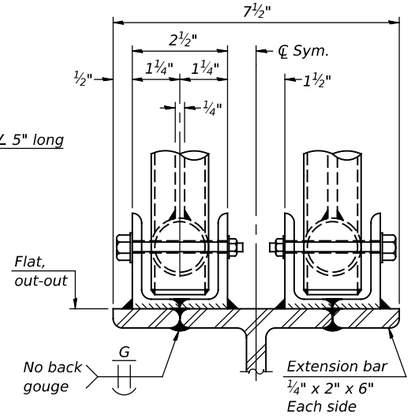

ELEVATION AT HANDRAIL JOINT (4)

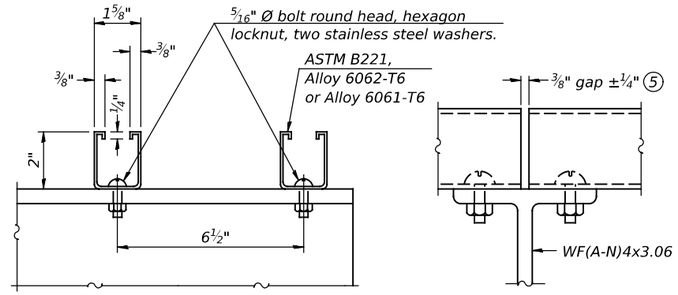

SECTION F-F

SECTION G-G

LIGHTING FIXTURE MOUNTS (IF REQUIRED)

(5) *Field cut ends of light support channels shall be free of burrs or hazardous projections and coated with zinc-rich primer or equivalent.*

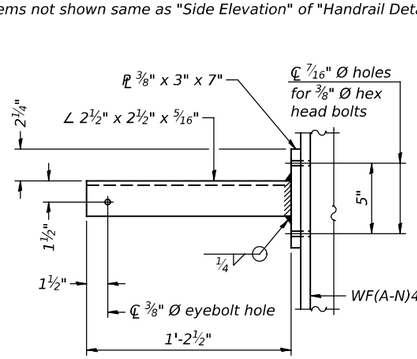

SECTION P-P

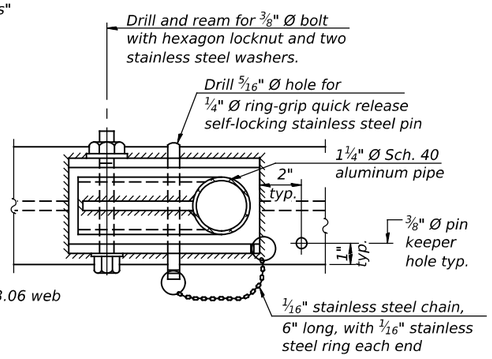

PLAN

DETAIL E HANDRAIL HINGE

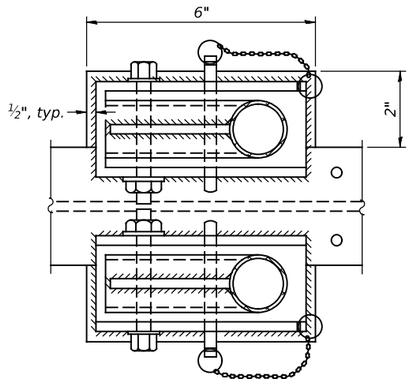

PLAN AT HANDRAIL JOINT

Details not shown same as "PLAN"

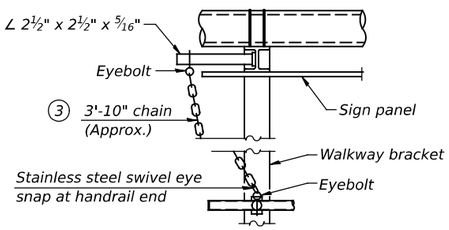

ALTERNATE SAFETY CHAIN ATTACHMENT

Details not shown similar to "Safety Chain" Details

(Walkway omitted for clarity)

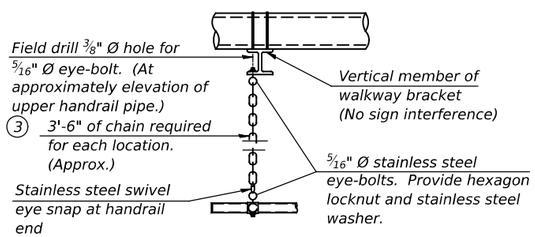

SAFETY CHAIN

One required for each end of each walkway.

(3) *3/16" Type 304L stainless steel chain, approximately 12 links per foot.*

(4) *Extrusions may be used in lieu of the details shown, with approval of the Engineer.*

OS-A-11 5-15-2023

MODEL: Default
FILE NAME: J:\2023\6044\WO SI\Engineering\OHSS SHEETS\D876R99-010-OHSS DETAILS.dgn

11/13/2024 6:28:34 AM

ABNA DESIGN FIRM REG. 184.002117

USER NAME =	DESIGNED - SEA	REVISED -
	CHECKED - FH	REVISED -
PLOT SCALE =	DRAWN - MBJ	REVISED -
PLOT DATE =	CHECKED - SEA	REVISED -

STATE OF ILLINOIS
DEPARTMENT OF TRANSPORTATION

OVERHEAD SIGN STRUCTURES
REPAIR A: LOCKING PINS & REPAIR G: SAFETY CHAIN

SHEET 5 OF 9 SHEETS

F.A.I. RTE.	SECTION	COUNTY	TOTAL SHEETS	SHEET NO.
64	82-(4,5,6,7)-1R-2	ST CLAIR	386	263
		CONTRACT NO. 76R99		
	ILLINOIS	FED. AID PROJECT		

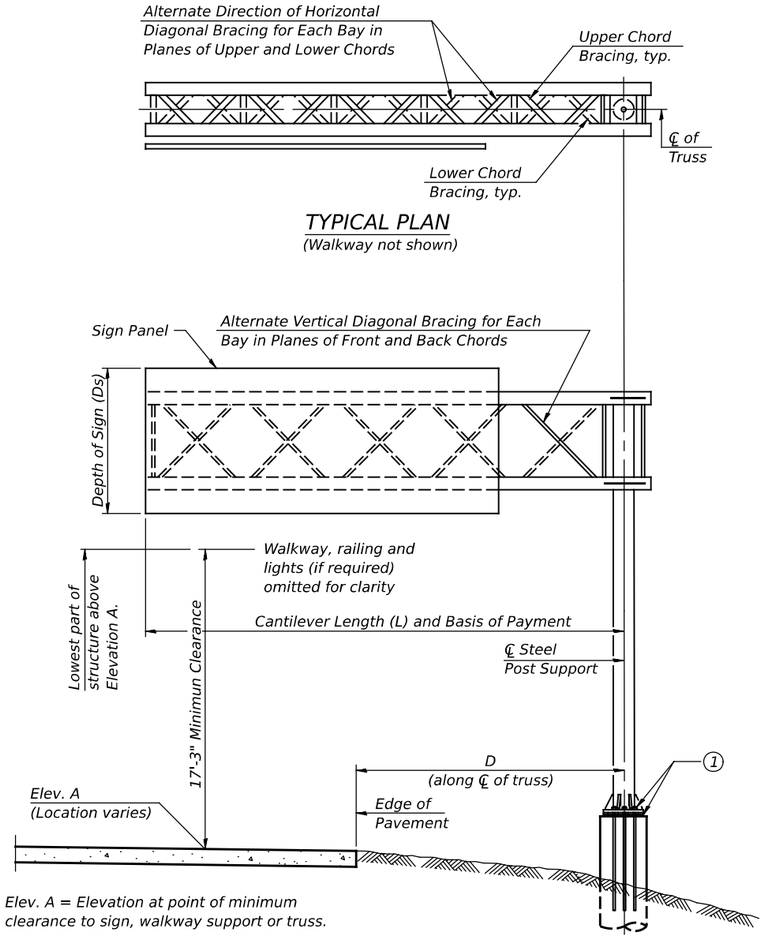

TYPICAL PLAN

(Walkway not shown)

Elev. A = Elevation at point of minimum clearance to sign, walkway support or truss.

TYPICAL ELEVATION

Looking in Direction of Traffic

Sign support structures may be subject to damaging vibrations and oscillations when sign panels are not in place during erection or maintenance of the structure. To avoid these vibrations and oscillations, consideration should be given to attaching temporary blank sign panels to the structure.

Truss Type	Maximum Sign Area	Maximum Length
I-C-A	170 Sq. Ft.	25 Ft.
II-C-A	340 Sq. Ft.	30 Ft.
III-C-A	400 Sq. Ft.	40 Ft.

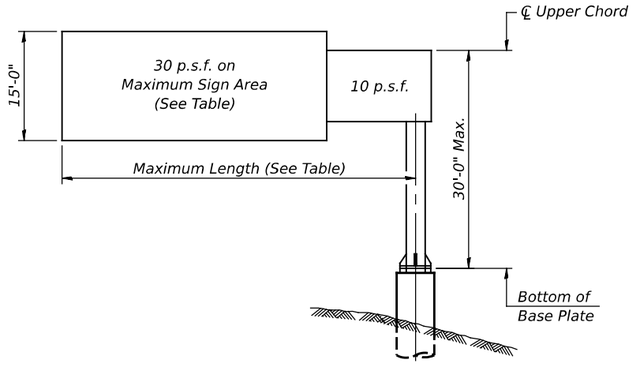

DESIGN WIND LOADING DIAGRAM

Parameters shown are basis for I.D.O.T. Standards Installations not within dimensional limits shown require special analysis for all components.

Note:
Trusses shall be shipped individually with adequate provision to prevent detrimental motion during transport. This may require ropes between horizontals and diagonals or energy dissipating (elastic) ties to the vehicle. The contractor is responsible for maintaining the configuration and protection of the trusses.

(1) *After adjustments to level truss and insure adequate vertical clearance, all top and leveling nuts shall be tightened against the base plate with a minimum torque of 200 lb.-ft. Stainless steel mesh shall then be placed around the perimeter of the base plate. Secure to base plate with stainless steel banding.*

* *If M270 Gr. 50W (M222) steel is proposed, chemistry for plate to be used shall first be approved by the Engineer as suitable for galvanizing and welding.*

GENERAL NOTES

DESIGN: AASHTO Standard Specifications for Structural Supports for Highway Signs, Luminaires and Traffic Signals. ("AASHTO Specifications")

CONSTRUCTION: Current (at time of letting) Illinois Department of Transportation Standard Specifications for Road and Bridge Construction, Supplemental Specifications and Special Provisions. ("Standard Specifications")

LOADING: 90 M.P.H. WIND VELOCITY

WALKWAY LOADING: Dead load plus 500 lbs. concentrated live load.

DESIGN STRESSES:
Field Units
f'c = 3,500 p.s.i.
fy = 60,000 p.s.i. (reinforcement)

WELDING: All welds to be continuous unless otherwise shown. All welding to be done in accordance with current AWS D1.1 and D1.2 Structural Welding Codes (Steel and Aluminum) and the Standard Specificiations.

MATERIALS: Aluminum Alloys as shown throughout plans. All Structural Steel Pipe shall be ASTM A53 Grade B or A500 Grade B or C. If A500 pipe is substituted for A53, then the outside diameter shall be as detailed and wall thickness greater than or equal to A53.
All Structural Steel Plates and Shapes shall conform to AASHTO M270 Gr. 36, Gr. 50 or Gr. 50W. Stainless steel for shims, sleeves and handhole covers shall be ASTM A240, Type 302 or 304, or another alloy suitable for exterior exposure and acceptable to the Engineer.*
The steel pipe and stiffening ribs at the base plate for the column shall have a minimum longitudinal Charpy V-Notch (CVN) energy of 15 lb.-ft. at 40° F. (Zone 2) before galvanizing.

FASTENERS FOR ALUMINUM TRUSSES: All bolts noted as "high strength" must satisfy the requirements of AASHTO M164 (ASTM A325), or approved alternate, and must have matching lock nuts. Threaded studs for splices (if Members interfere) must satisfy the requirements of ASTM A449, ASTM A193, Grade B7, or approved alternate, and must have matching lock nuts. Bolts and lock nuts not required to be high strength must satisfy the requirements of ASTM A307. All bolts and lock nuts must be hot dip galvanized per AASHTO M232. The lock nuts must have nylon or steel inserts. A stainless steel flat washer conforming to ASTM A240 Type 302 or 304, is required under both head and nut or under both nuts where threaded studs are used. High strength bolt installation shall conform to Article 505.04 (f) (2)d of the IDOT Standard Specifications for Road and Bridge Construction. Rotational capacity ("ROCAP") testing of bolts will not be required.

U-BOLTS AND EYEBOLTS: U-Bolts and Eyebolts must be produced from ASTM A276 Type 304, 304L, 316 or 316L, Condition A, cold finished stainless steel, or an equivalent material acceptable to the Engineer. All nuts for U-Bolts and Eyebolts must be lock nuts equivalent to ASTM A307 with nylon or steel inserts and hot dip galvanized per AASHTO M232. A stainless steel flat washer conforming to ASTM A240, Type 302 or 304, is required under each U-Bolt and Eyebolt lock nut.

GALVANIZING: All Steel Grating, Plates, Shapes and Pipe shall be Hot Dip Galvanized after fabrication in accordance with AASHTO M111. Painting is not permitted.

ANCHOR RODS: Shall conform to ASTM F1554 Gr. 105.

CONCRETE SURFACES: All concrete surfaces above an elevation 6" below the lowest final ground line at each foundation shall be cleaned and coated with Concrete Sealer in accordance with the Standard Specifications.

REINFORCEMENT BARS: Reinforcement Bars designated (E) shall be epoxy coated in accordance with the Standard Specifications.

FOUNDATIONS: The contract unit price for Drilled Shaft Concrete Foundations shall include reinforcement bars complete in place.

TYPICAL CANTILEVER TRUSS FOR REFERENCE ONLY

OSC-A-1 5-15-2023

ABNA DESIGN FIRM REG. 184.002117

USER NAME =	DESIGNED - SEA	REVISED -
	CHECKED - FH	REVISED -
PLOT SCALE =	DRAWN - MBJ	REVISED -
PLOT DATE =	CHECKED - SEA	REVISED -

STATE OF ILLINOIS
DEPARTMENT OF TRANSPORTATION

CANTILEVER SIGN STRUCTURES - GENERAL PLAN & ELEVATION
ALUMINUM TRUSS & STEEL POST

SHEET 6 OF 9 SHEETS

F.A.I. RTE.	SECTION	COUNTY	TOTAL SHEETS	SHEET NO.
64	82-(4,5,6,7)-1R-2	ST CLAIR	386	264
		CONTRACT NO. 76R99		
	ILLINOIS	FED. AID PROJECT		

MODEL: Default
FILE NAME: J:\2023\6044\WO 5\Engineering\OHSS SHEETS\D876R99-011C-GEN PLAN.dgn
11/13/2024 6:28:35 AM

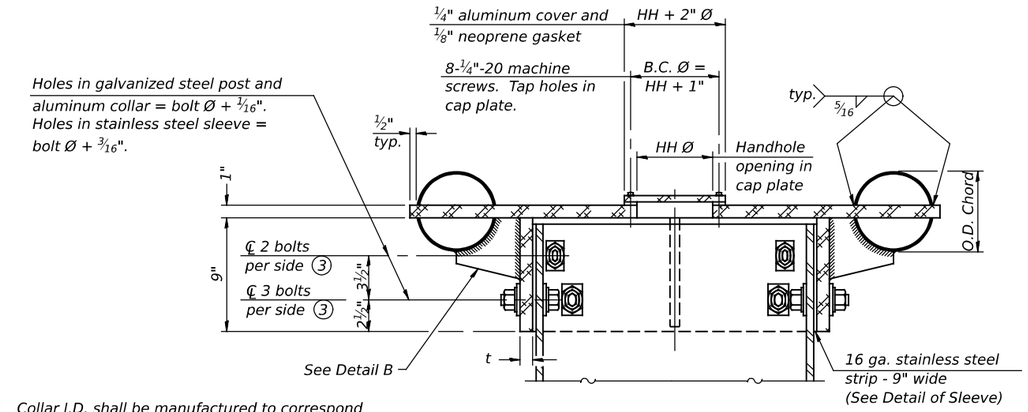

SECTION B-B

Bolts, washers (including contoured washers), and locknuts shall be stainless steel.

④ Collar I.D. shall be manufactured to correspond to O.D. of actual galvanized post and stainless steel sleeve plus ⅛" (±1/16"). Maximum gap between post and collar at any location equals ⅛" before tightening bolts.

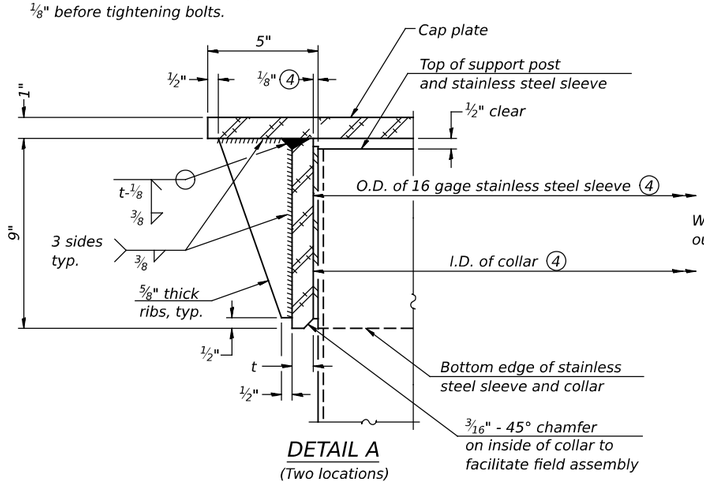

DETAIL A

(Two locations)

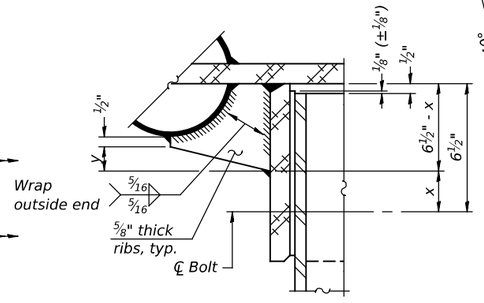

DETAIL B

Two locations
(For details not shown, see Detail C)

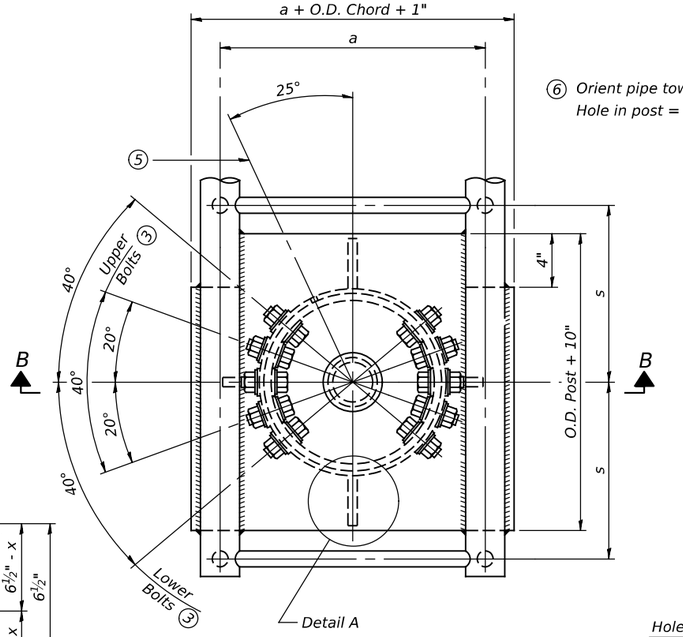

PLAN VIEW - TOP OF COLUMN

(5) Optional full penetration weld in collar.
(Two locations maximum....(180° apart)....X-ray or UT 100%)

⑥ Orient pipe toward walkway side. Hole in post = O.D. pipe + ⅛".

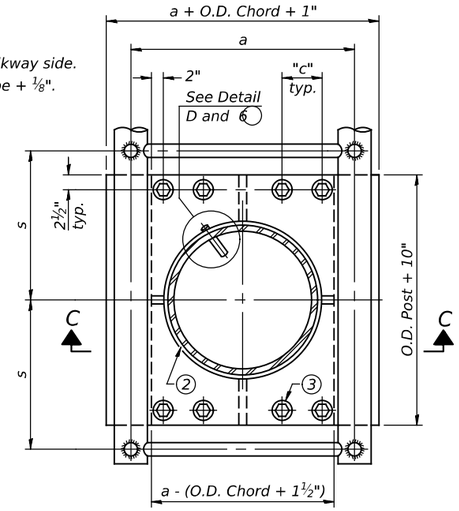

SECTION THRU POST ABOVE LOWER CHORDS

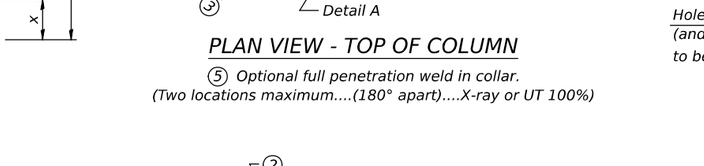

SECTION C-C

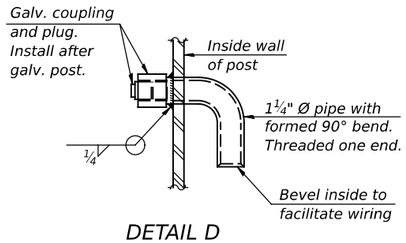

DETAIL D

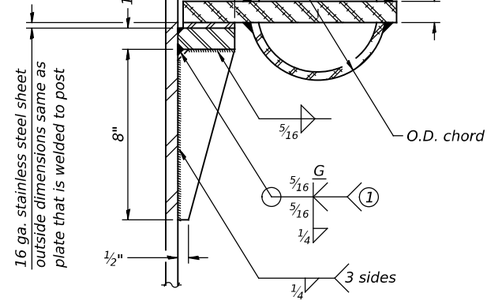

DETAIL C

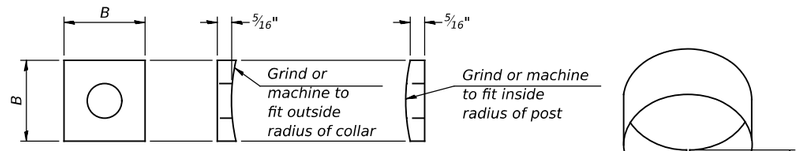

CONTOURED WASHERS

Bolt Size	Contoured Washers	
	Hole Dia.	B
⅞"	1"	2½"
1"	1⅛"	3"
1¼"	1⅜"	3¼"

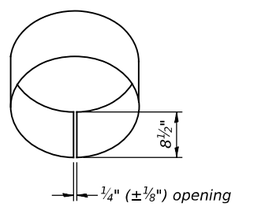

DETAIL OF STAINLESS STEEL SLEEVE

Weld to post after galvanizing.
(Prepare post surface to insure tight, uniform fit and allow welding.)
Welds to be 1½" long at 6" cts. along top edge and at ¼" opening.

Truss Type	Post Size	Upper & Lower Connection Bolt Diameter (3)	Lower Juncture Bolt Spacing Dimension "c" (3)	Opening in Cap Plate "HH"	Collar Thickness (t)	Side Ribs	
						x	y
I-C-A	16" Ø (83#/ ')	⅞"	3¼"	8"	⅝"	1¾"	2¼"
II-C-A	24" Ø (125#/ ')	1"	3½"	12"	⅞"	2"	1¼"
III-C-A (35' max.)	24" Ø (125#/ ')	1¼"	3½"	12"	⅞"	2"	1"
III-C-A (>35' to 40')	24" Ø (171#/ ')	1¼"	3½"	12"	⅞"	2"	1"

① Grind top if required to fully seat aluminum plate and stainless steel sheet.

② After tightening lower connection bolts, fill gap with non-hardening, silicone caulk suitable for exterior exposure and acceptable to the Engineer. Cost is included in Overhead Sign Structure Cantilever.

③ Upper and lower connection bolts in collar and bolts at lower chord connection shall be high strength with matching locknuts. Connection bolts shall have 2 stainless steel flat washers each.

OSC-A-3 5-15-2023

ABNA DESIGN FIRM REG. 184.002117

USER NAME =	DESIGNED - SEA	REVISED -	
	CHECKED - FH	REVISED -	
PLOT SCALE =	DRAWN - MBJ	REVISED -	
PLOT DATE =	CHECKED - SEA	REVISED -	

STATE OF ILLINOIS
DEPARTMENT OF TRANSPORTATION

CANTILEVER SIGN STRUCTURES - JUNCTURE DETAILS
REPAIR D: TIGHTEN CANTILEVER CONNECTION
SHEET 7 OF 9 SHEETS

F.A.I. RTE.	SECTION	COUNTY	TOTAL SHEETS	SHEET NO.
64	82-(4,5,6,7)-1R-2	ST CLAIR	386	265
		CONTRACT NO. 76R99		
	ILLINOIS	FED. AID PROJECT		

MODEL: Default
FILE NAME: I:\2023\6044\WO 5\Engineering\OHSS SHEETS\D876R99-014C-OHSS DETAILS.dgn
11/13/2024 6:28:36 AM

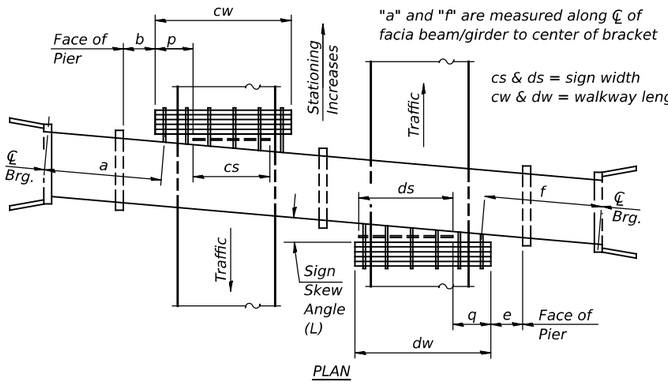

PLAN

(Left Sign Skew > 15°)

WALKWAY AND HANDRAIL SKETCH

(Road plan beneath structure varies.)

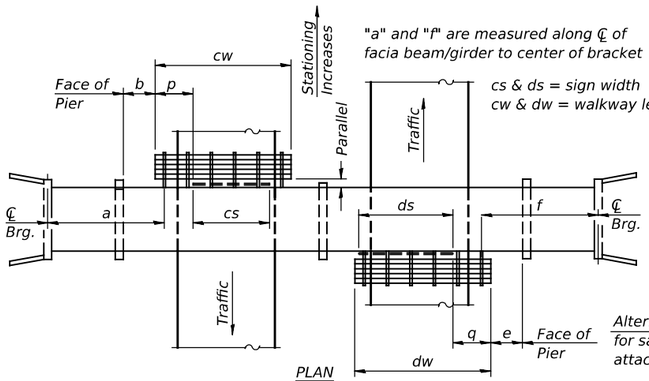

PLAN

(For Sign Skew ≤ 15°, all brackets constant)

WALKWAY AND HANDRAIL SKETCH

(Road plan beneath structure varies.)

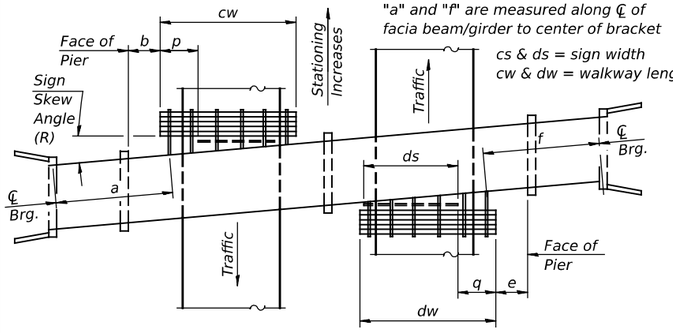

PLAN

(Right Sign Skew > 15°)

WALKWAY AND HANDRAIL SKETCH

(Road plan beneath structure varies.)

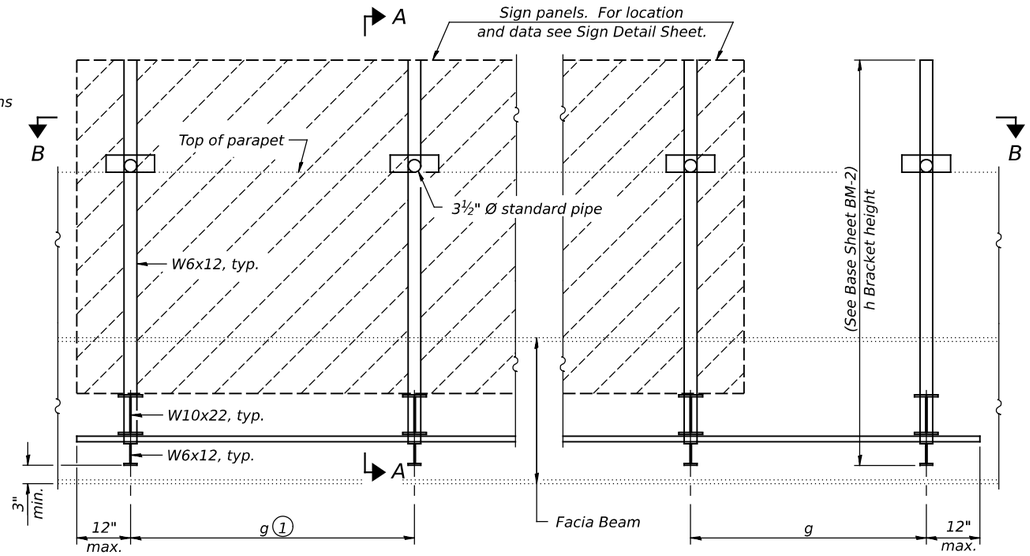

TYPICAL FRONT ELEVATION

(With lights, safety chain and handrail omitted for clarity.)

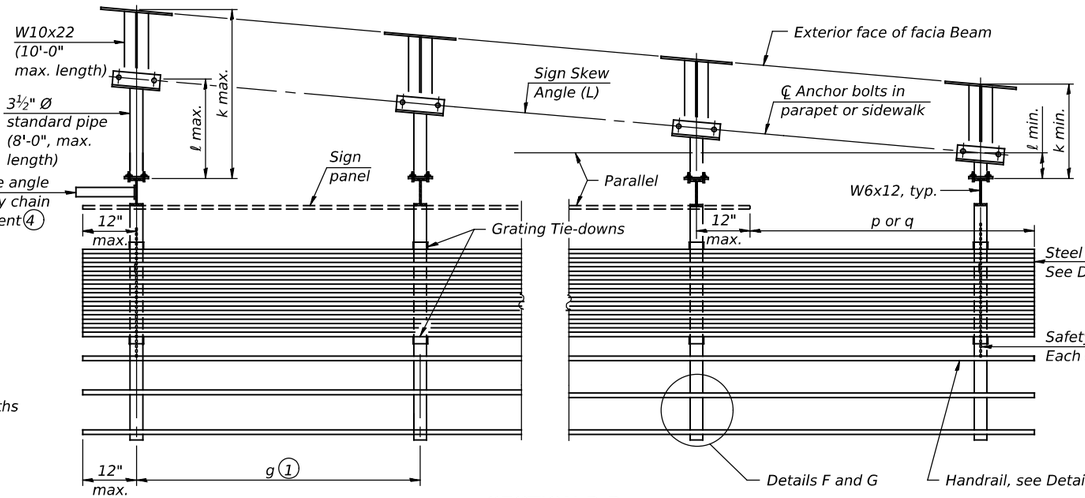

SECTION B-B

(Shown: Left Sign Skew>15°)

GENERAL NOTES

SPECIFICATIONS:

DESIGN: AASHTO Standard Specifications for Structural Supports for (2) Highway Signs, Luminaires and Traffic Signals. ("AASHTO Specifications")

CONSTRUCTION: Current (at time of letting) Illinois Department of Transportation Standard Specifications for Road and Bridge Construction, Supplemental Specifications and Special Provisions. ("Standard Specifications")

LOADING: 90 M.P.H. WIND VELOCITY

WALKWAY LOADING: Dead load plus 500 lbs. concentrated live load.

MINIMUM CLEARANCE: 3" greater than bridge members at all locations. (All Obstructions)

WELDING: All welds to be continuous unless otherwise shown. All welding to be done in accordance with current AWS D1.1 Structural Welding Code (Steel) and the Standard Specifications.

MATERIALS: All Structural Steel Pipe shall be ASTM A53 Grade B with a minimum yield of 35,000 p.s.i., or A500 Grade B or C with a minimum yield of 46,000 p.s.i. If A500 pipe is substituted for A53, then the outside diameter shall be as detailed and wall thickness greater than or equal to A53. All Structural Steel Plates and Shapes shall conform to AASHTO M270 Gr. 36, Gr. 50 (M183, M223 Gr. 50,).

HIGH STRENGTH BOLTS: All bolts, washers, nuts and locknuts shall satisfy the requirements of ASTM designation A307 unless noted as "H.S." which shall require AASHTO M164 (A325), ASTM A449, or approved alternate. All fasteners shall be hot dip galvanized per AASHTO M232 unless otherwise specified.

GALVANIZING: All Steel Grating, Plates, Shapes and Pipe shall be Hot Dip Galvanized after fabrication in accordance with AASHTO M111. Painting is not permitted.

ANCHOR RODS: All-threaded rod shall conform to ASTM F1554 Grade 105, ¾" Ø x 12" long, each with one plate washer and locknut and be hot dip galvanized per AASHTO M232. They shall be either cast into the concrete or epoxy grouted in accordance with Section 584 of the Standard Specifications. Minimum embedment in concrete shall be 9".

(1) *Bracket spacing g ≤ 6'-0", max. Spacing shall be uniform if possible but may vary ±6" to miss existing obstruction (rail post, light poles, web stiffeners, splice plates, etc.). Adjust bracket lengths accordingly on skewed structures.*

(2) *Any design modifications shall be based on the current version of applicable specifications and submitted for the Engineer's approval.*

(3) *Unit price includes grating, handrail, brackets, supports, anchor bolts, fasteners, fabrication, delivery, erection, field drilling and other necessary items. Limits of payment are based on grating length (cw, dw) unless otherwise specified. For Safety Chain Details and Details D, F and G, see Base Sheet BM-4.*

(4) *If walkway bracket at safety chain location is behind sign, add angle to bracket. See detail on Base Sheet BM-4.*

TYPICAL BRIDGE MOUNT FOR REFERENCE ONLY

BM-1 5-15-2023

MODEL: Default
FILE NAME: J:\2023\6044\WO 5\Engineering\OHSS SHEETS\D876R99-019B-OHSS DETAILS.dgn
11/13/2024 6:28:38 AM

ABNA DESIGN FIRM REG. 184.002117

USER NAME =	DESIGNED - SEA	REVISED -
	CHECKED - FH	REVISED -
PLOT SCALE =	DRAWN - MBJ	REVISED -
PLOT DATE =	CHECKED - SEA	REVISED -

STATE OF ILLINOIS
DEPARTMENT OF TRANSPORTATION

BRIDGE MOUNT SIGN STRUCTURES
GENERAL PLAN AND ELEVATION

SHEET 8 OF 9 SHEETS

F.A.I. RTE.	SECTION	COUNTY	TOTAL SHEETS	SHEET NO.
64	82-(4,5,6,7)-1R-2	ST CLAIR	386	266
		CONTRACT NO. 76R99		
	ILLINOIS	FED. AID PROJECT		

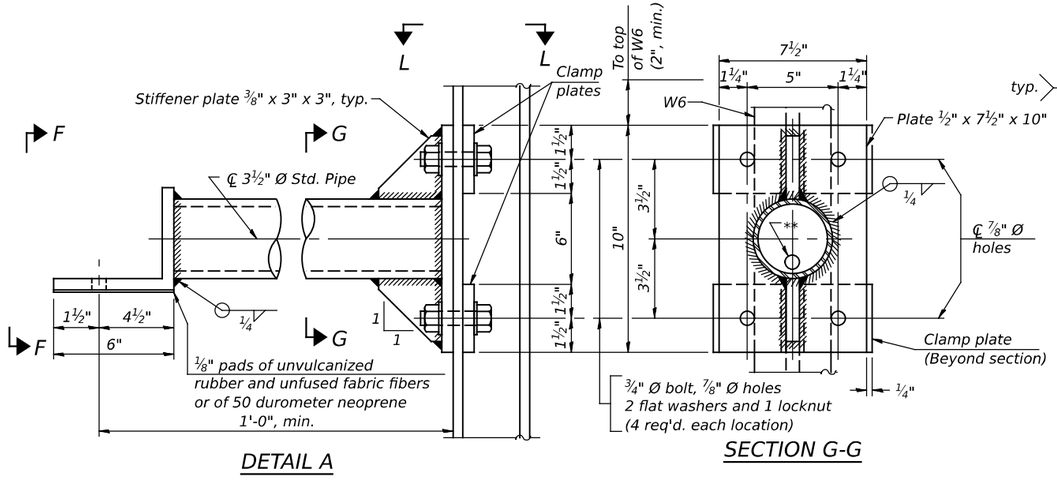

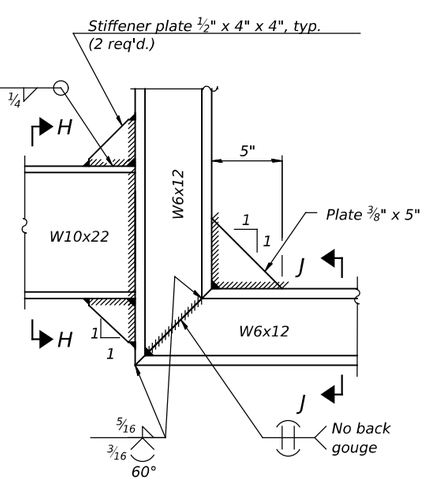

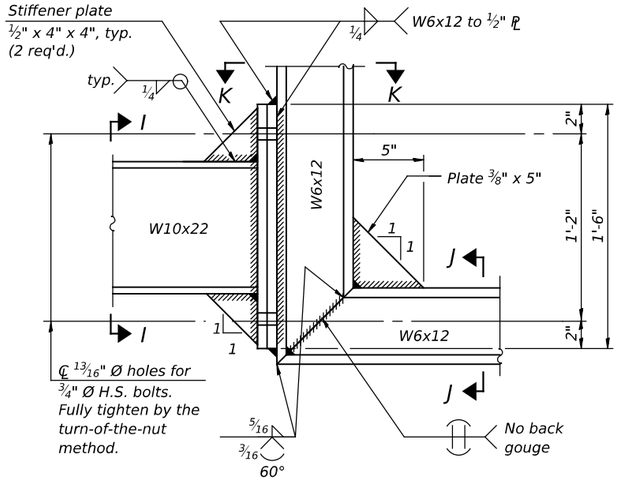

DETAIL B - WELDED W10x22 TO W6x12 CONNECTION

DETAIL B - ALTERNATE BOLTED W10x22 TO W6x12 CONNECTION

Alternate may be substituted by contractor to facilitate construction or galvanizing, especially on long struts for skewed bridges.

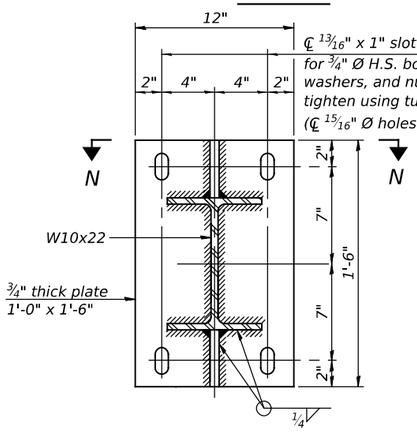

SECTION C-C

Steel beam or girder connection plate details

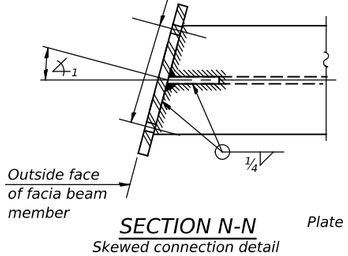

SECTION N-N

Skewed connection detail for W10x22 to facia beam.

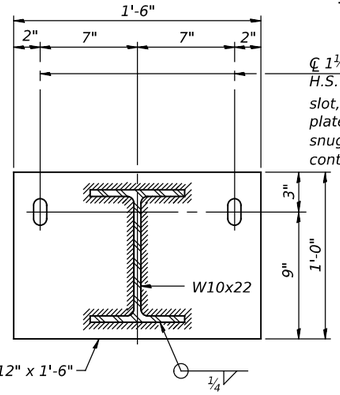

SECTION D-D

Concrete beam or girder connection plate details.

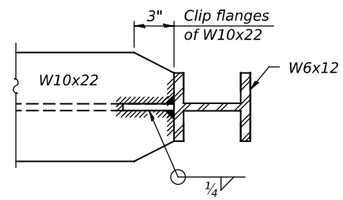

SECTION E-E

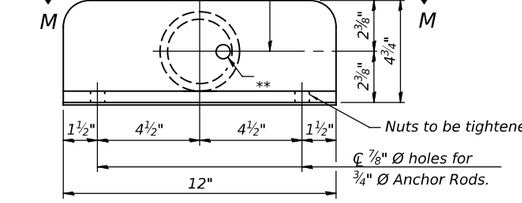

VIEW F-F

** 13/16" Ø holes for galvanizing. After galvanizing, install ⅞" Ø A307 hot-dip galvanized bolt to close hole in angle. (No bolt required in ½" plate.)

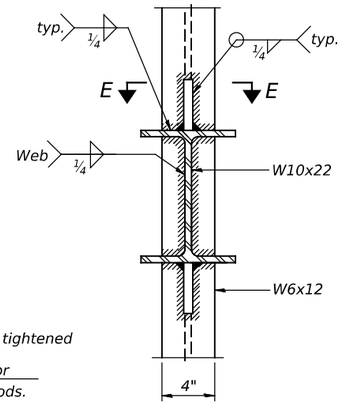

SECTION H-H

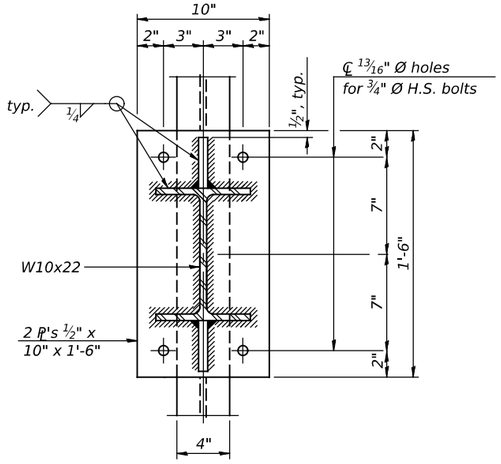

SECTION I-I

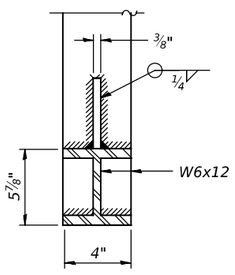

SECTION J-J

Note: For constant slab overhang at facia beam, $\measuredangle_1 = \measuredangle_2 =$ sign angle. For flared beams or other special cases where $\measuredangle_1 \neq \measuredangle_2$, $\measuredangle_1$ = sign angle.

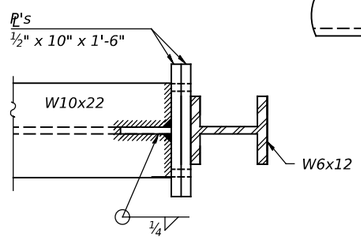

SECTION K-K

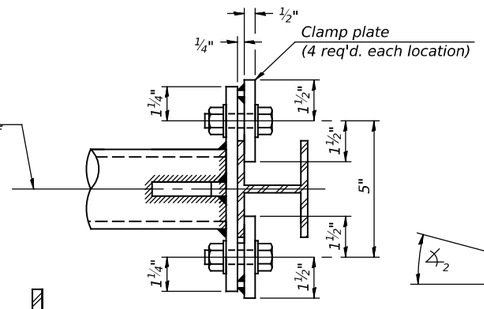

SECTION L-L

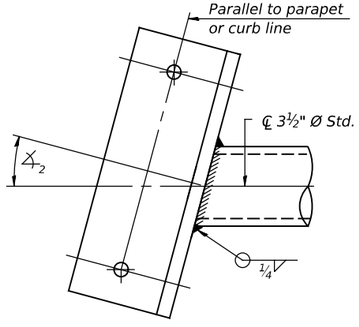

SECTION M-M

Skewed connection detail for 3½" Ø pipe to parapet.

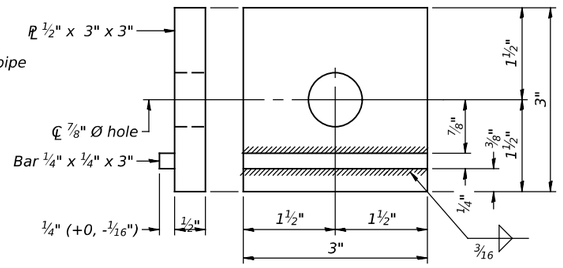

CLAMP PLATE DETAILS

BM-3

5-15-2023

ABNA DESIGN FIRM REG. 184.002117	USER NAME =	DESIGNED - SEA	REVISED -
		CHECKED - FH	REVISED -
	PLOT SCALE =	DRAWN - MBJ	REVISED -
	PLOT DATE =	CHECKED - SEA	REVISED -

STATE OF ILLINOIS
DEPARTMENT OF TRANSPORTATION

BRIDGE MOUNT SIGN STRUCTURES
REPAIR C: TIGHTEN BRIDGE PARAPET ANCHOR
SHEET 9 OF 9 SHEETS

F.A.I. RTE.	SECTION	COUNTY	TOTAL SHEETS	SHEET NO.
64	82-(4,5,6,7)-1R-2	ST CLAIR	386	267
		CONTRACT NO. 76R99		
	ILLINOIS	FED. AID PROJECT		

MODEL: Default
FILE NAME: J:\2023\6044\WO 5\Engineering\OHSS SHEETS\D876R99-021B-OHSS DETAILS.dgn

11/13/2024 6:28:39 AM

GENERAL NOTES:

1. THIS PROJECT INCLUDES THE INSTALLATION OF A NEW LIGHTING SYSTEM TO REPLACE THE EXISTING LIGHTING ALONG THE INTERCHANGE OF IL 157 AND I-64. THE PROPOSED LIGHTING SHALL BE OWNED AND MAINTAINED BY THE STATE OF ILLINOIS.
2. THE CONTRACTOR SHALL CONTACT THE ELECTRIC UTILITY COMPANY TO COORDINATE THE ELECTRIC SERVICE WORK.
3. THE QUANTITIES OF RACEWAY WHERE INDICATED ON THESE PLANS ARE APPROXIMATIONS ONLY. THE CONTRACTOR SHALL FIELD VERIFY ALL LENGTHS AND SHALL INSTALL RACEWAYS IN COMPLETE COMPLIANCE WITH THE SPECIFIED REQUIREMENTS.
4. THE CONTRACTOR SHALL NOTIFY J.U.L.I.E. TO LOCATE AND MARK/STAKE ALL UNDERGROUND UTILITIES.
5. THE DEPT. IS NOT A MEMBER OF J.U.L.I.E. AND DOES NOT LOCATE ITS OWN FACILITIES. THE APPLICANT AT THEIR OWN EXPENSE SHALL OBTAIN THE SERVICES OF A QUALIFIED ELECTRICAL CONTRACTOR TO LOCATE STATE-OWNED FACILITIES.
6. THE CONTRACTOR SHALL VERIFY LOCATIONS OF UNDERGROUND/OVERHEAD UTILITIES PRIOR TO INSTALLATION OF LIGHT POLES AND CONDUITS. IF THERE IS A CONFLICT WITH THE LIGHT POLES/CONDUITS AS SHOWN ON PLANS, THE CONTRACTOR SHALL SUGGEST ALTERNATIVE LOCATIONS AND COORDINATE WITH THE ENGINEER PRIOR TO PERFORMING ANY CONSTRUCTION WORK.
7. TRENCHES FOR LIGHTING RACEWAYS SHALL HAVE A MINIMUM DEPTH OF 30".
8. LIGHTING SYSTEM INSTALLATION SHALL CONFORM TO THE LATEST IDOT STANDARDS, NEC AND LOCAL CODES.
9. ALL ELECTRICAL EQUIPMENT AND PRODUCTS SHALL BE UL LISTED AND LABELED.
10. THE CONTRACTOR SHALL COORDINATE WITH EXISTING CONDITIONS WHEN INSTALLING UNIT DUCT TO AVOID CONFLICTS WITH EXISTING UNDERGROUND UTILITIES AND TREES ROOTS. THE CONTRACTOR SHALL BE RESPONSIBLE FOR ANY DAMAGE AS DETERMINED BY THE ENGINEER.
11. THE CONTRACTOR SHALL COORDINATE WITH EXISTING CONDITIONS WHEN INSTALLING LIGHT POLE FOUNDATIONS TO AVOID CONFLICTS WITH UNDERGROUND UTILITIES. WHEN CONFLICTS ARE ENCOUNTERED, THE CONTRACTOR SHALL REQUEST TO RELOCATE THE FOUNDATION. THE NEW LOCATION SHALL BE APPROVED BY THE ENGINEER PRIOR TO INSTALLATION.
12. GROUND RODS SHALL BE INSTALLED AT EACH LIGHTING UNIT.
13. EXISTING UNIT DUCT AND CONDUIT SHALL BE ABANDONED IN PLACE AFTER DISCONNECTING FROM THE POWER SOURCE.
14. EXISTING CABLE IN CONDUIT SHALL BE REMOVED FROM CONDUIT AND BECOME THE PROPERTY OF THE CONTRACTOR.

CALL-OUT DESCRIPTION



CIRCUIT NUMBER EXAMPLE

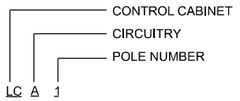

LIST OF STATE STANDARDS

805001-01	ELECTRICAL SERVICE INSTALLATION DETAILS
821101-02	LUMINAIRE WIRING IN POLE
825026-04	LIGHTING CONTRTOLLER BASE MOUNT 480V
830001-03	LIGHT POLE ALUMINUM MAST ARM
836001-04	LIGHT POLE FOUNDATION
838001-01	BREAKAWAY DEVICES

BILL OF MATERIALS

DESCRIPTION	UNIT	QUANTITY
ELECTRIC SERVICE INSTALLATION	EACH	2
UNDERGROUND CONDUIT, GALVANIZED STEEL, 4" DIA.	FOOT	771
UNIT DUCT, 600V, 2-1C NO.6, 1/C NO.8 GROUND, (XLP-TYPE USE), 1" DIA. POLYETHYLENE	FOOT	19,444
ELECTRIC CABLE IN CONDUIT, 600V (XLP-TYPE USE) 1/C NO. 1/0	FOOT	1,113
LUMINAIRE, LED, ROADWAY, OUTPUT DESIGNATION H	EACH	71
LIGHTING CONTROLLER, BASE MOUNTED, 480VOLT, 100AMP	EACH	2
LIGHT POLE, ALUMINUM, 50 FT. M.H., 15 FT. MAST ARM	EACH	71
LIGHT POLE FOUNDATION, 30" DIAMETER	FOOT	497
BREAKAWAY DEVICE, TRANSFORMER BASE, 15 INCH BOLT CIRCLE	EACH	71
REMOVAL OF LIGHTING UNIT, NO SALVAGE	EACH	62
REMOVAL OF POLE FOUNDATION	EACH	62
REMOVAL OF LIGHTING CONTROLLER	EACH	2
REMOVAL OF ELECTRIC SERVICE INSTALLATION	EACH	2
REMOVAL OF LIGHTING CONTROLLER FOUNDATION	EACH	2
REMOVAL OF EXISTING SIGN LIGHTING UNIT WITH NO SALVAGE	EACH	4
REMOVE CABLE FROM CONDUIT	FOOT	685

LEGEND

- EXISTING LIGHTING UNIT TO BE REMOVED
- PROPOSED LIGHTING UNIT, 50 FT. MH, 15 FT. MAST ARM, UNLESS OTHERWISE INDICATED, (480V - PHASE TO PHASE) LED LUMINAIRE, OUTPUT DESIGNATION H WITH BREAKAWAY DEVICE AND 17" BOLT CIRCLE FOUNDATION
- EXISTING ELECTRIC SERVICE
- UNIT DUCT, 600V, 2-1C #6, 1/C #8 GROUND, (XLP-TYPE USE) 1" DIA. POLYETHYLENE
- ELECTRIC SERVICE 240/480V, 1 PHASE, 3 WIRE
- PROPOSED LIGHTING CONTROLLER 480V, 1 PHASE, 3 WIRE 100 AMP, BASE MOUNTED
- EXISTING LIGHTING CONTROLLER
- UNDERGROUND CONDUIT GALVANIZED STEEL
- ELECTRIC CABLE IN CONDUIT 4" DIA., 3-1/C NO. 1/0
- GROUND ROD 5/8" X 10 FT.

LTN–01

AMES Engineering, Inc.
CONSULTING ENGINEERS
6330 Belmont Road, Suite 4B
Downers Grove, IL 60516

USER NAME = msomer		DESIGNED - MH	REVISED -	
		DRAWN - MD	REVISED -	
PLOT SCALE = 0.16666633 ' / in.		CHECKED - BL	REVISED -	
PLOT DATE = 11/12/2024		DATE - 9-13-2024	REVISED -	

STATE OF ILLINOIS
DEPARTMENT OF TRANSPORTATION

LIGHTING GENERAL NOTES, BILL OF MATERIALS AND LEGEND
IL 157 AND I–64

SCALE: NONE | SHEET 1 OF 1 SHEETS | STA. | TO STA.

F.A.I. RTE.	SECTION	COUNTY	TOTAL SHEETS	SHEET NO.
64	82-(4,5,6,7)-1RS-2	ST. CLAIR	388	268
		CONTRACT NO. 76R99		
	ILLINOIS FED. AID PROJECT			

MODEL: GEN-1 [Sheet]
FILE NAME: F:\Projects\1089 - VV PH HI (206-045) - AMES\WO #4\Design\Sht\IL 157\D876899-sheet IL 157 GEN.dgn

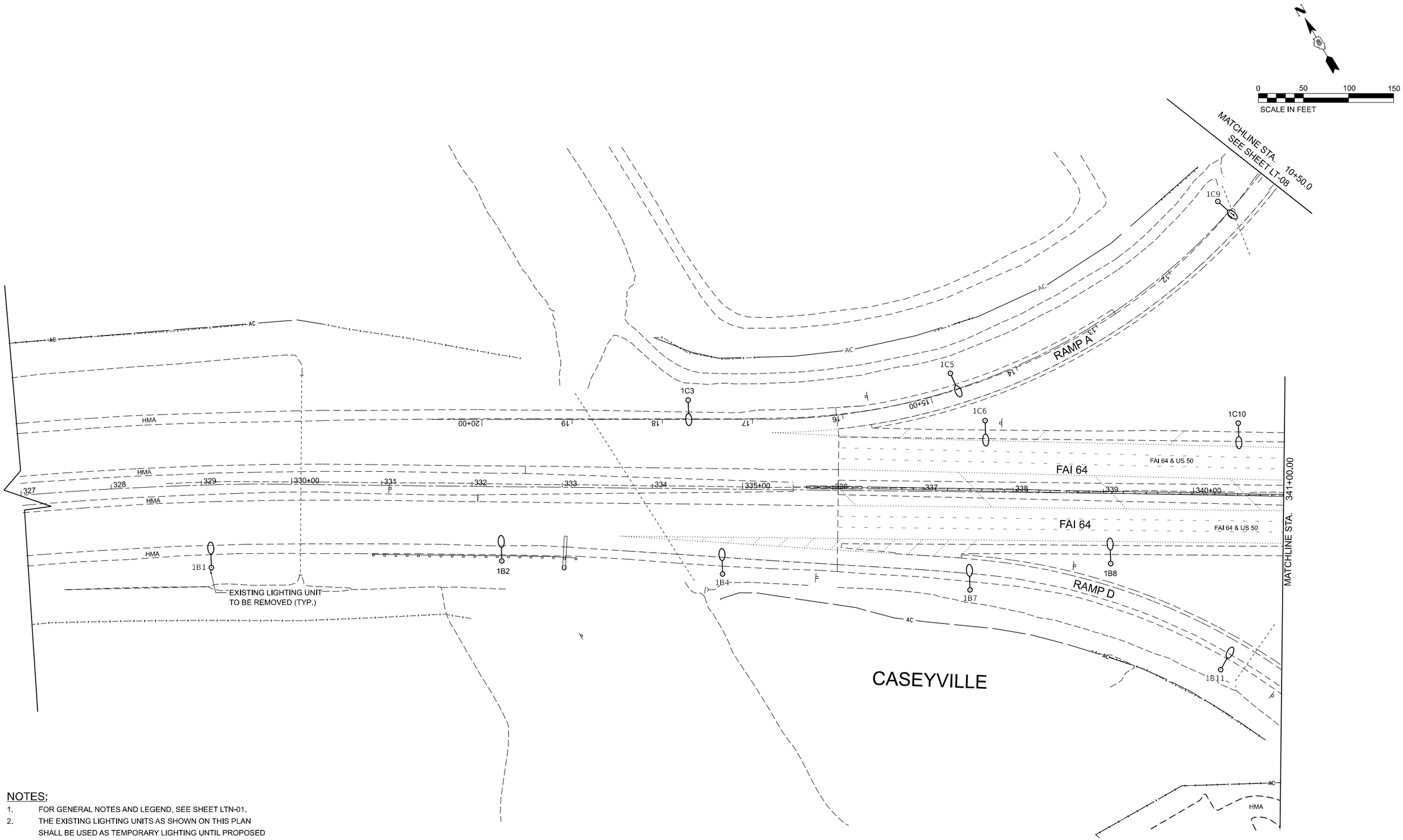

NOTES:

1. FOR GENERAL NOTES AND LEGEND, SEE SHEET LTN-01.
2. THE EXISTING LIGHTING UNITS AS SHOWN ON THIS PLAN SHALL BE USED AS TEMPORARY LIGHTING UNTIL PROPOSED LIGHTING IS INSTALLED AND OPERATIONAL.

LT–01

MODEL: EX64 - Plan 1 (Sheet)
FILE NAME: F:\Projects\1089 - VV PH I-II (206-045) - AMES\WO #41\Design\Sht\IL 157\D876899-sheet IL 157 EXISTING.dgn

AMES Engineering, Inc.
CONSULTING ENGINEERS
6330 Belmont Road, Suite 4B
Downers Grove, IL 60516

USER NAME = msomer	DESIGNED - MH	REVISED -	
	DRAWN - MD	REVISED -	
PLOT SCALE = 0.16666633 ' / In.	CHECKED - BL	REVISED -	
PLOT DATE = 12/11/2024	DATE - 9-13-2024	REVISED -	

STATE OF ILLINOIS
DEPARTMENT OF TRANSPORTATION

REMOVAL AND TEMPORARY LIGHTING PLAN
IL 157 AND I–64

SCALE: 1"=50' | SHEET 1 OF 10 SHEETS | STA. 327+00 | TO STA. 341+00

F.A.I. RTE.	SECTION	COUNTY	TOTAL SHEETS	SHEET NO.
64	82-(4,5,6,7)-1RS-2	ST. CLAIR	388	269
		CONTRACT NO. 76R99		
		ILLINOIS	FED. AID PROJECT	

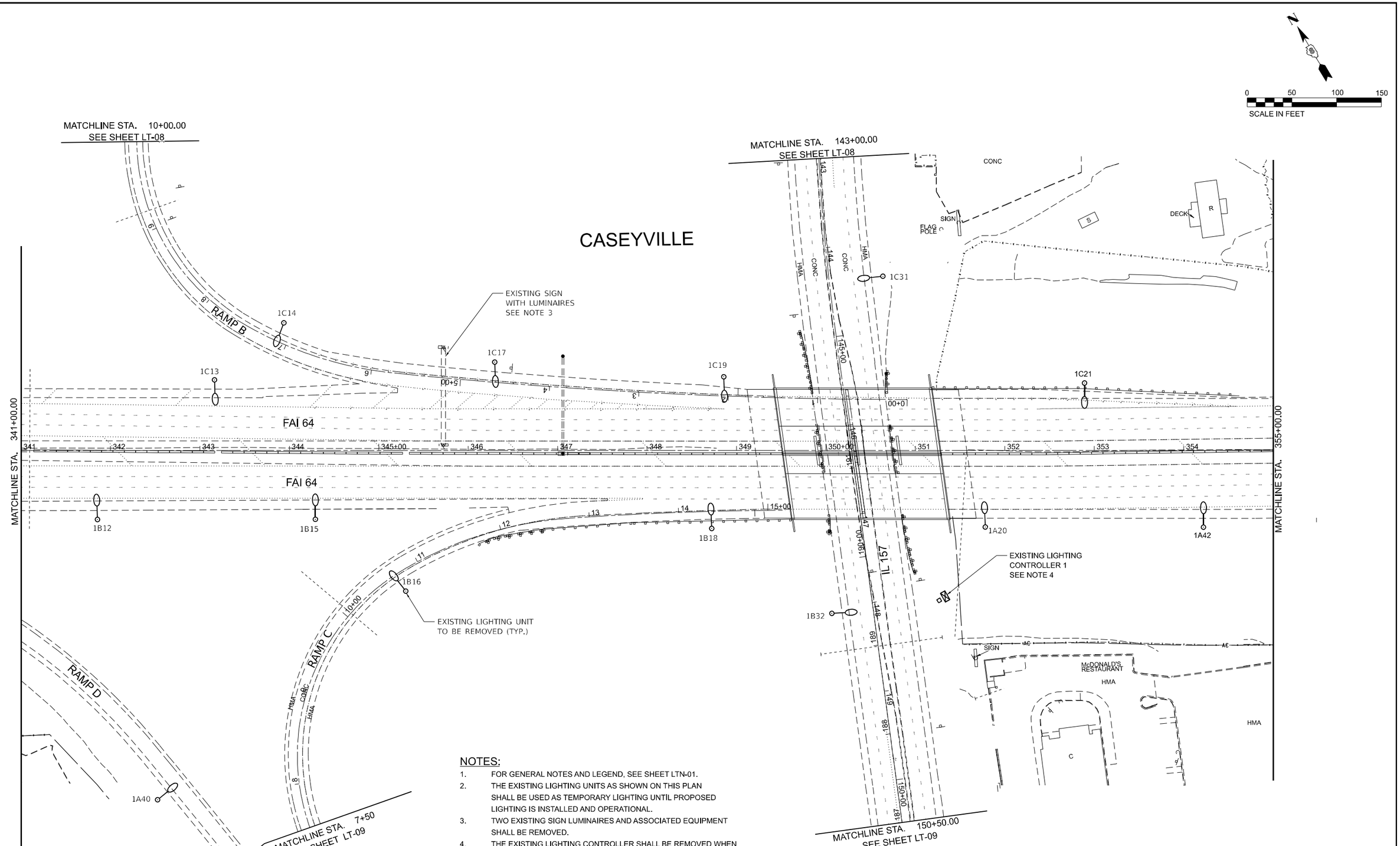

NOTES:

1. FOR GENERAL NOTES AND LEGEND, SEE SHEET LTN-01.
2. THE EXISTING LIGHTING UNITS AS SHOWN ON THIS PLAN SHALL BE USED AS TEMPORARY LIGHTING UNTIL PROPOSED LIGHTING IS INSTALLED AND OPERATIONAL.
3. TWO EXISTING SIGN LUMINAIRES AND ASSOCIATED EQUIPMENT SHALL BE REMOVED.
4. THE EXISTING LIGHTING CONTROLLER SHALL BE REMOVED WHEN THE PROPOSED CONTROLLER IS INSTALLED AND OPERATIONAL. SEE SHEET LT-11 FOR THE LOCATION OF THE PROPOSED LIGHTING CONTROLLER "LC1".

LT–02

MODEL: EX64 - Plan 2 [Sheet]
FILE NAME: F:\Projects\1089 - VV PH I-II (206-045) - AMES\WO #4\Design\ShtIL 157\D876699-sheet IL 157 EXISTING.dgn

AMES Engineering, Inc.
CONSULTING ENGINEERS
6330 Belmont Road, Suite 4B
Downers Grove, IL 60516

USER NAME = msomer	DESIGNED - MH	REVISED -	
	DRAWN - MD	REVISED -	
PLOT SCALE = 0.16666633 ' / In.	CHECKED - BL	REVISED -	
PLOT DATE = 12/11/2024	DATE - 9-13-2024	REVISED -	

STATE OF ILLINOIS
DEPARTMENT OF TRANSPORTATION

REMOVAL AND TEMPORARY LIGHTING PLAN
IL 157 AND I–64

SCALE: 1"=50' | SHEET 2 OF 10 SHEETS | STA. 341+00 | TO STA. 355+00

F.A.I. RTE.	SECTION	COUNTY	TOTAL SHEETS	SHEET NO.
64	82-(4,5,6,7)-1RS-2	ST. CLAIR	388	270
		CONTRACT NO. 76R99		
	ILLINOIS	FED. AID PROJECT		

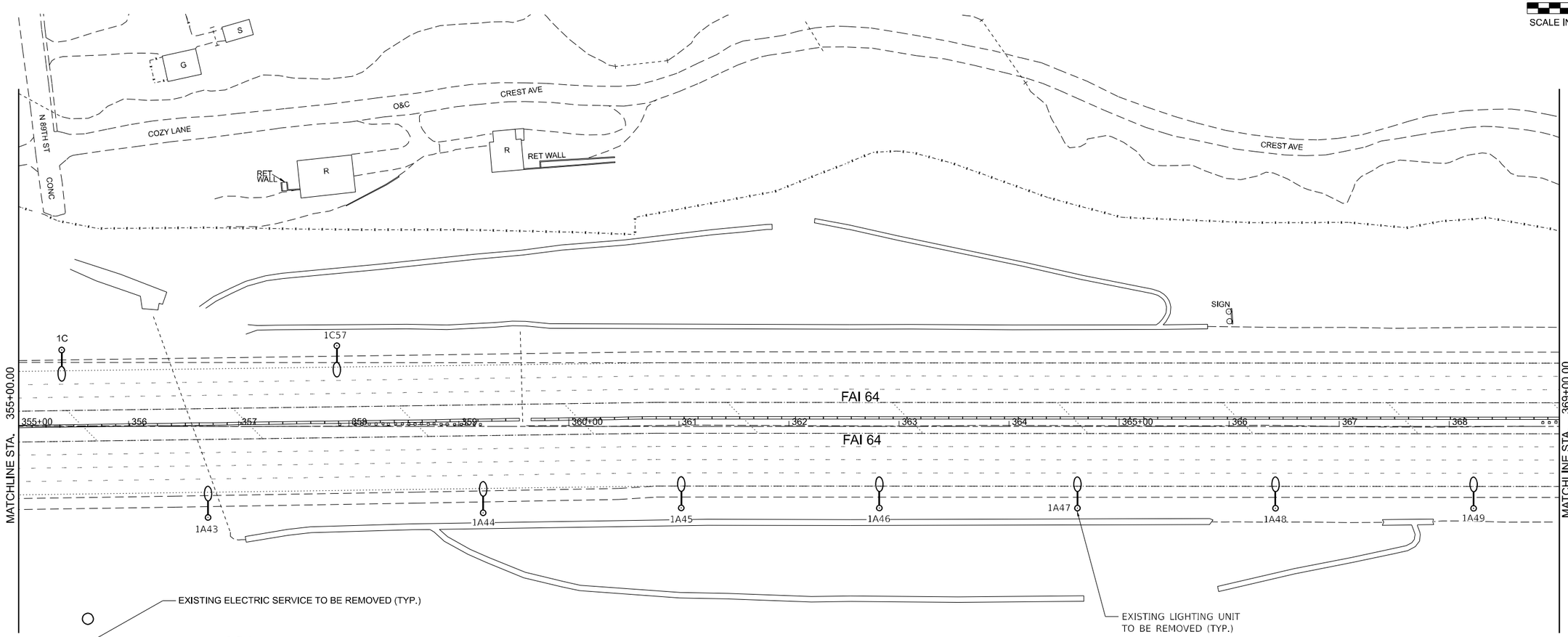

NOTES:

1. FOR GENERAL NOTES AND LEGEND, SEE SHEET LTN-01.
2. THE EXISTING LIGHTING UNITS AS SHOWN ON THIS PLAN SHALL BE USED AS TEMPORARY LIGHTING UNTIL PROPOSED LIGHTING IS INSTALLED AND OPERATIONAL.
3. THE EXISTING ELECTRIC SERVICE SHALL BE REPLACED WITH A NEW ELECTRIC SERVICE. THE EXISTING ELECTRIC SERVICE DROP SHALL BE REMOVED AFTER THE PROPOSED ELECTRIC SERVICE HAS BEEN INSTALLED. THE CONTRACTOR SHALL COORDINATE THE WORK WITH THE ELECTRIC UTILITY COMPANY. THE EXISTING SERVICE CONDUIT WITH SERVICE CABLE SHALL BE ABANDONED IN PLACE AFTER DISCONNECTING FROM BOTH ENDS SEE SHEET. SEE SHEET LT-11 FOR THE PROPOSED LOCATION OF THE PROPOSED LIGHTING CONTROLLER "LC1".

LT–03

MODEL: EX64 - Plan 3 [Sheet]
FILE NAME: F:\Projects\1089 - VV PH I-II (206-045) - AMES\WO #4\Design\Shtlt_157D876893-sheet IL 157 EXISTING.dgn

AMES Engineering, Inc.
CONSULTING ENGINEERS
6330 Belmont Road, Suite 4B
Downers Grove, IL 60516

USER NAME = msomer	DESIGNED - MH	REVISED -	
	DRAWN - MD	REVISED -	
PLOT SCALE = 0.16666633 ' / In.	CHECKED - BL	REVISED -	
PLOT DATE = 12/1/2024	DATE - 9-13-2024	REVISED -	

STATE OF ILLINOIS
DEPARTMENT OF TRANSPORTATION

REMOVAL AND TEMPORARY LIGHTING PLAN
IL 157 AND I–64

SCALE: 1"=50' | SHEET 3 OF 10 SHEETS | STA. 355+00 | TO STA. 369+00

F.A.I. RTE.	SECTION	COUNTY	TOTAL SHEETS	SHEET NO.
64	82-(4,5,6,7)-1RS-2	ST. CLAIR	388	271
		CONTRACT NO. 76R99		
	ILLINOIS FED. AID PROJECT			

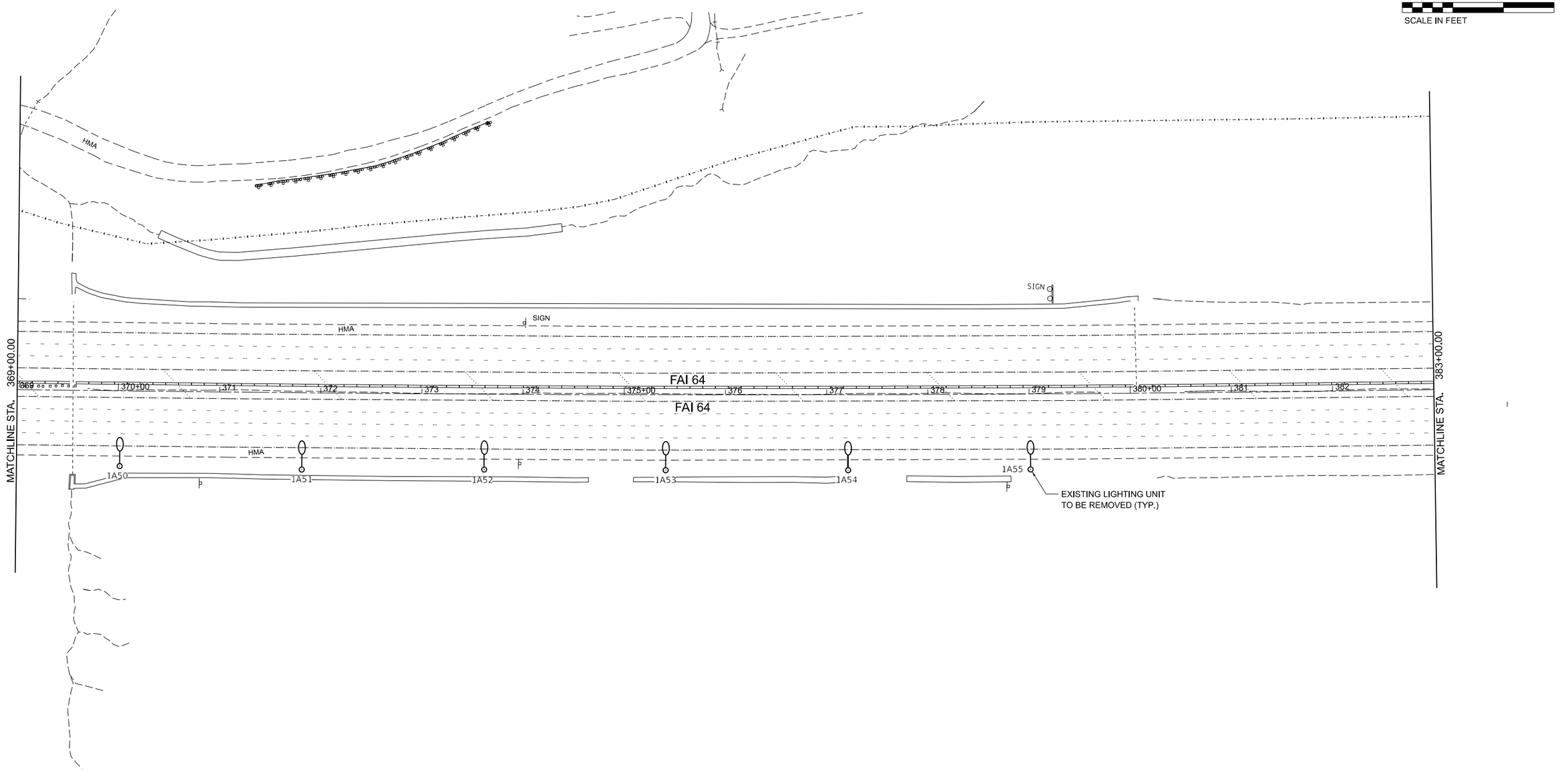

NOTES:

1. FOR GENERAL NOTES AND LEGEND, SEE SHEET LTN-01.
2. THE EXISTING LIGHTING UNITS AS SHOWN ON THIS PLAN SHALL BE USED AS TEMPORARY LIGHTING UNTIL PROPOSED LIGHTING IS INSTALLED AND OPERATIONAL.

LT–04

MODEL: EX64 - Plan 4 [Sheet]
FILE NAME: F:\Projects\1089 - VV PH I-M (206-045) - AMES\WO #4\Design\Shtlt_157\D876893-sheet IL 157 EXISTING.dgn

AMES Engineering, Inc.
CONSULTING ENGINEERS
6330 Belmont Road, Suite 4B
Downers Grove, IL 60516

USER NAME = msomer	DESIGNED - MH	REVISED -	
	DRAWN - MD	REVISED -	
PLOT SCALE = 0.16666633 ' / In.	CHECKED - BL	REVISED -	
PLOT DATE = 12/11/2024	DATE - 9-13-2024	REVISED -	

STATE OF ILLINOIS
DEPARTMENT OF TRANSPORTATION

REMOVAL AND TEMPORARY LIGHTING PLAN
IL 157 AND I–64

SCALE: 1"=50' | SHEET 4 OF 10 SHEETS | STA. 327+00 | TO STA. 341+00

F.A.I. RTE.	SECTION	COUNTY	TOTAL SHEETS	SHEET NO.
64	82-(4,5,6,7)-1RS-2	ST. CLAIR	388	272
		CONTRACT NO. 76R99		
	ILLINOIS FED. AID PROJECT			

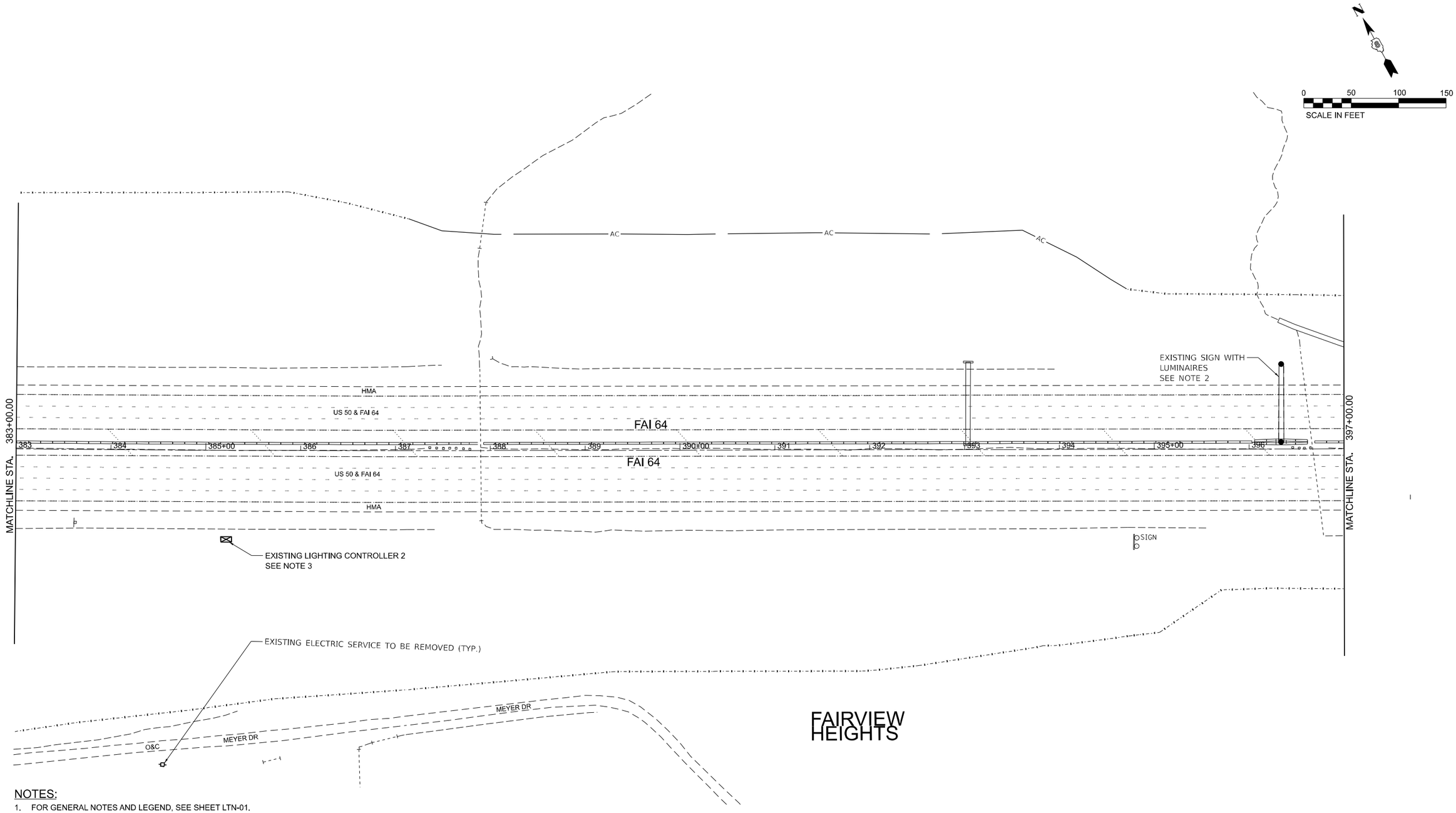

NOTES:

1. FOR GENERAL NOTES AND LEGEND, SEE SHEET LTN-01.
2. TWO EXISTING SIGN LUMINAIRES AND ASSOCIATED EQUIPMENT SHALL BE REMOVED.
3. THE EXISTING LIGHTING CONTROLLER AND ELECTRIC SERVICE SHALL BE REMOVED WHEN THE PROPOSED LIGHTING CONTROLLER IS INSTALLED AND IS OPERATIONAL. THE EXISTING ELECTRIC SERVICE DROP SHALL BE REPLACED WITH A NEW ELECTRIC SERVICE. THE CONTRACTOR SHALL COORDINATE THE WORK WITH THE ELECTRIC UTILITY COMPANY. THE EXISTING SERVICE CONDUIT WITH SERVICE CABLE SHALL BE ABANDONED IN PLACE AFTER DISCONNECTING FROM BOTH ENDS. SEE SHEET LT-14 FOR THE PROPOSED LOCATION OF THE PROPOSED LIGHTING CONTROLLER "LC2".

LT–05

MODEL: EX64 - Plan 5 [Sheet]
FILE NAME: F:\Projects\1089 - VV PH I-II (206-045) - AMES\WO #4\Design\Sht\IL 157\D876R99-sheet IL 157 EXISTING.dgn

AMES Engineering, Inc. CONSULTING ENGINEERS 6330 Belmont Road, Suite 4B Downers Grove, IL 60516	USER NAME = msomer	DESIGNED - MH	REVISED -	STATE OF ILLINOIS DEPARTMENT OF TRANSPORTATION	REMOVAL AND TEMPORARY LIGHTING PLAN IL 157 AND I–64	F.A.I. RTE. 64	SECTION 82-(4,5,6,7)-1RS-2	COUNTY ST. CLAIR	TOTAL SHEETS 388	SHEET NO. 273
		DRAWN - MD	REVISED -					CONTRACT NO. 76R99		
	PLOT SCALE = 0.16666633 ' / in.	CHECKED - BL	REVISED -							
	PLOT DATE = 12/11/2024	DATE - 9-13-2024	REVISED -		SCALE: 1"=50' SHEET 5 OF 10 SHEETS STA. 383+00 TO STA. 397+00		ILLINOIS	FED. AID PROJECT		

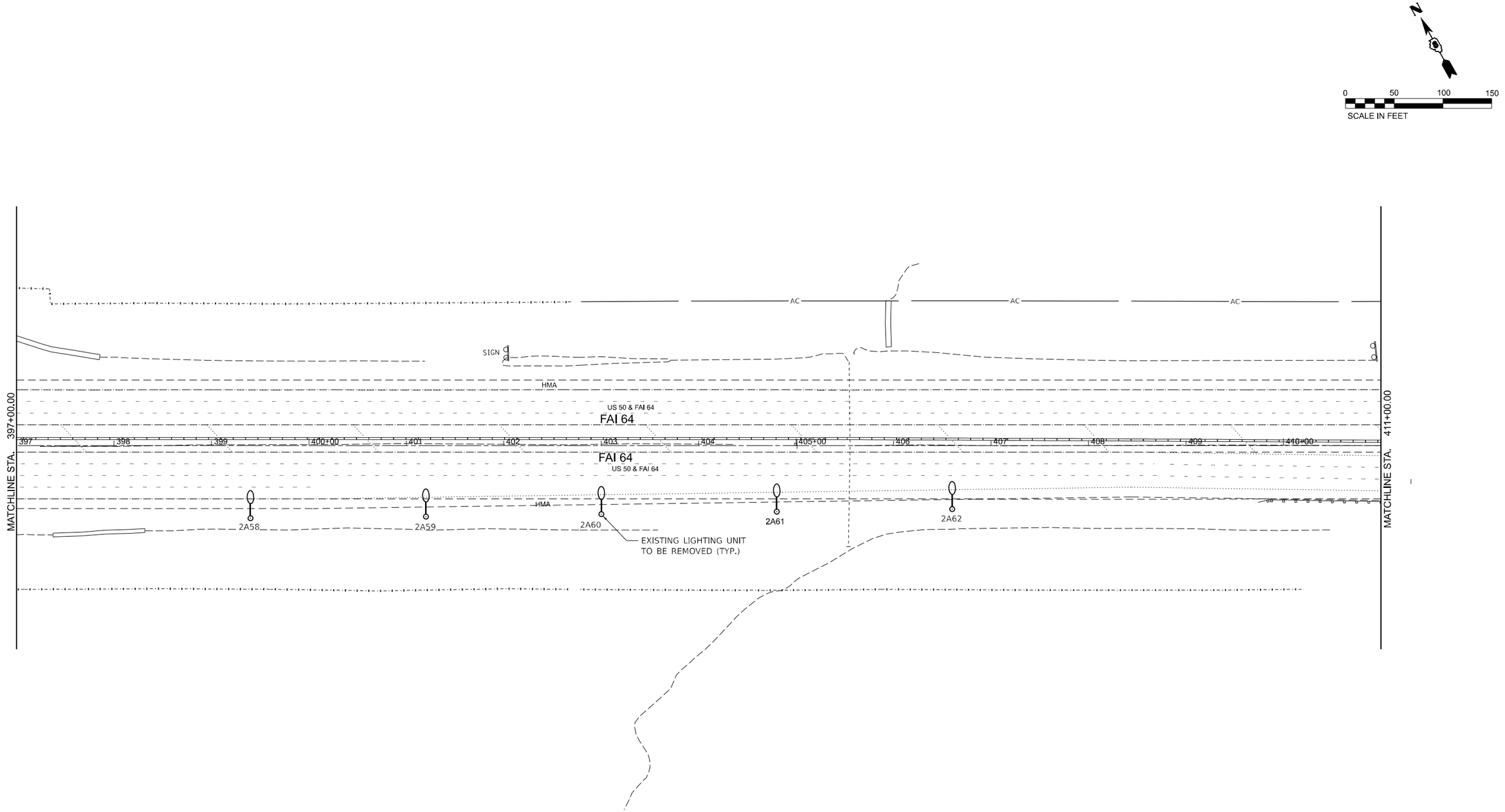

NOTES:

1. FOR GENERAL NOTES AND LEGEND, SEE SHEET LTN-01.
2. THE EXISTING LIGHTING UNITS AS SHOWN ON THIS PLAN SHALL BE USED AS TEMPORARY LIGHTING UNTIL PROPOSED LIGHTING IS INSTALLED AND OPERATIONAL.

LT–06

MODEL: EX64 - Plan 6 (Sheet)
FILE NAME: F:\Projects\1089 - VV PH I-II (206-045) - AMES\WO #4\Design\Sht\IL 157\08776699-sheet IL 157 EXISTING.dgn

AMES Engineering, Inc.
CONSULTING ENGINEERS
6330 Belmont Road, Suite 4B
Downers Grove, IL 60516

USER NAME = msomer	DESIGNED - MH	REVISED -	
	DRAWN - MD	REVISED -	
PLOT SCALE = 0.16666633 ' / In.	CHECKED - BL	REVISED -	
PLOT DATE = 12/11/2024	DATE - 9-13-2024	REVISED -	

STATE OF ILLINOIS
DEPARTMENT OF TRANSPORTATION

REMOVAL AND TEMPORARY LIGHTING PLAN
IL 157 AND I–64

SCALE: 1"=50' | SHEET 6 OF 10 SHEETS | STA. 397+00 | TO STA. 411+00

F.A.I. RTE.	SECTION	COUNTY	TOTAL SHEETS	SHEET NO.
64	82-(4,5,6,7)-1RS-2	ST. CLAIR	388	274
		CONTRACT NO. 76R99		
		ILLINOIS	FED. AID PROJECT	

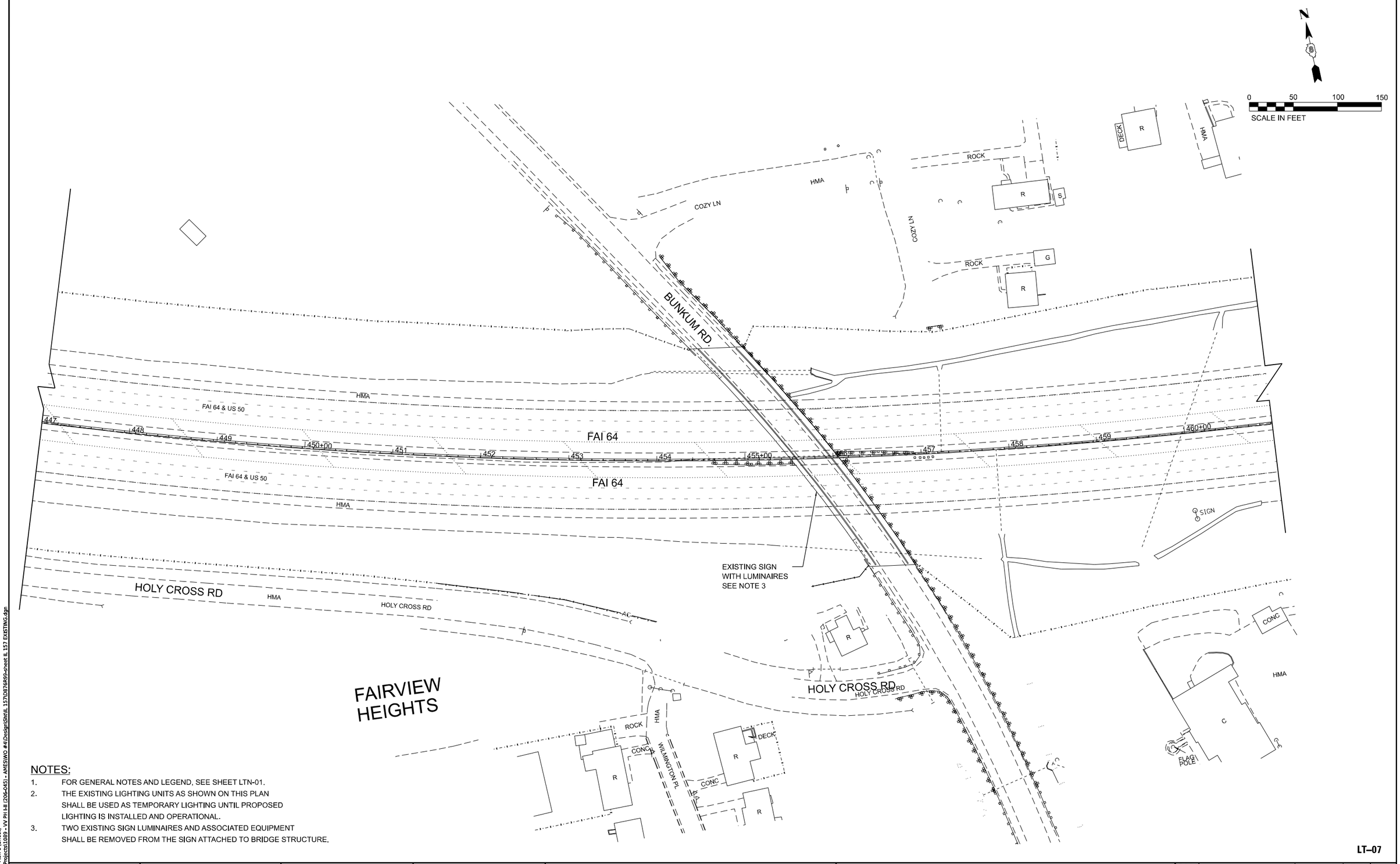

NOTES:

1. FOR GENERAL NOTES AND LEGEND, SEE SHEET LTN-01.
2. THE EXISTING LIGHTING UNITS AS SHOWN ON THIS PLAN SHALL BE USED AS TEMPORARY LIGHTING UNTIL PROPOSED LIGHTING IS INSTALLED AND OPERATIONAL.
3. TWO EXISTING SIGN LUMINAIRES AND ASSOCIATED EQUIPMENT SHALL BE REMOVED FROM THE SIGN ATTACHED TO BRIDGE STRUCTURE.

LT–07

MODEL: EX64 - Plan 8 [Sheet]
FILE NAME: F:\Projects\1089 - VV PH I-II (206-045) - AMES\WO #4\Design\Sht\IL 157\D876R99-sheet IL 157 EXISTING.dgn

AMES Engineering, Inc. CONSULTING ENGINEERS 6330 Belmont Road, Suite 4B Downers Grove, IL 60516	USER NAME = msomer	DESIGNED - MH	REVISED -	STATE OF ILLINOIS DEPARTMENT OF TRANSPORTATION	REMOVAL AND TEMPORARY LIGHTING PLAN IL 157 AND I–64
		DRAWN - MD	REVISED -		
	PLOT SCALE = 0.16666633 ' / in.	CHECKED - BL	REVISED -		
	PLOT DATE = 12/11/2024	DATE - 9-13-2024	REVISED -		SCALE: 1"=50' SHEET 8 OF 10 SHEETS STA. 447+00 TO STA. 461+00

F.A.I. RTE.	SECTION	COUNTY	TOTAL SHEETS	SHEET NO.
64	82-(4,5,6,7)-1RS-2	ST. CLAIR	388	275
		CONTRACT NO. 76R99		
		ILLINOIS FED. AID PROJECT		

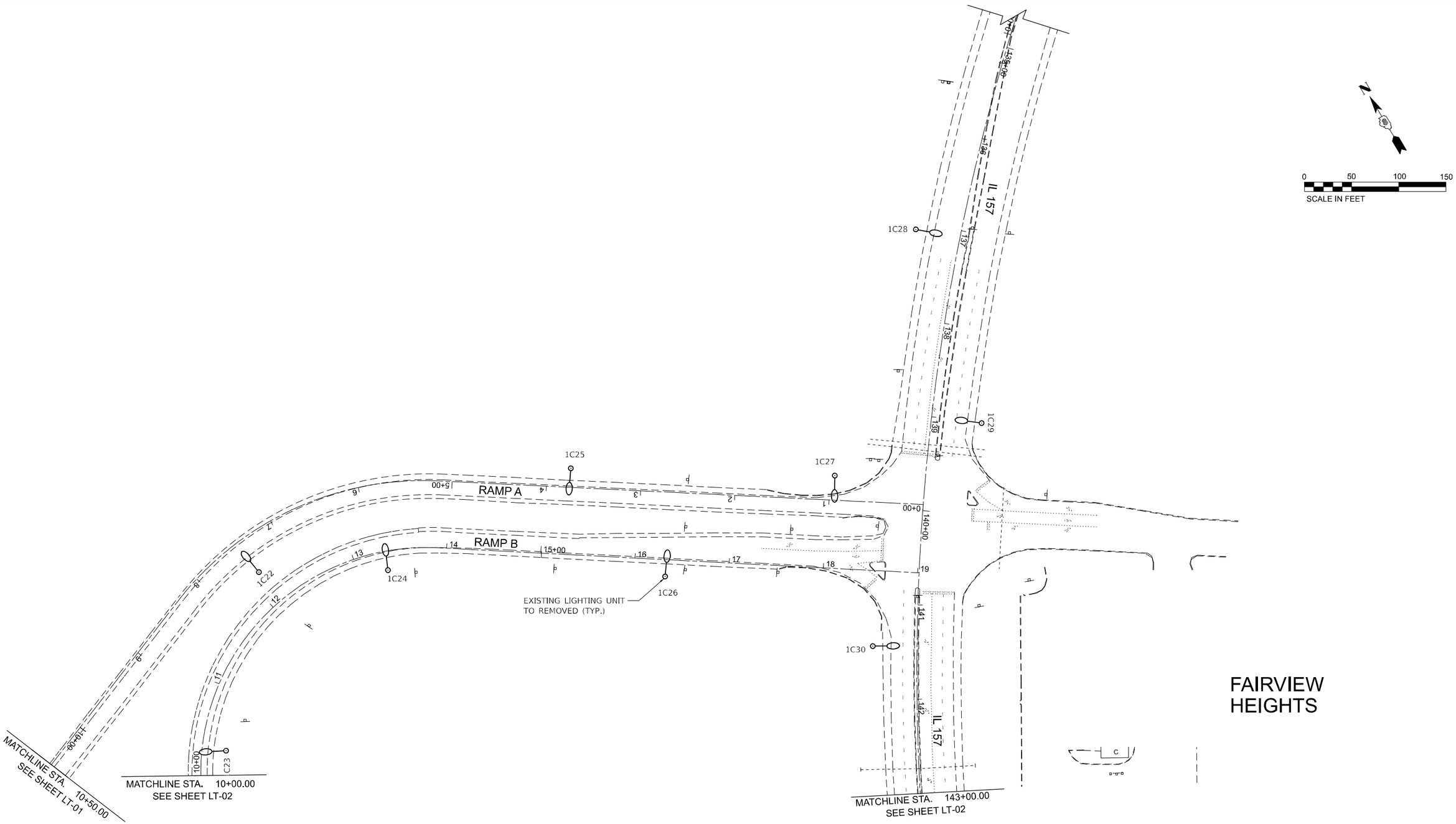

NOTES:

1. FOR GENERAL NOTES AND LEGEND, SEE SHEET LTN-01.
2. THE EXISTING LIGHTING UNITS AS SHOWN ON THIS PLAN SHALL BE USED AS TEMPORARY LIGHTING UNTIL PROPOSED LIGHTING IS INSTALLED AND OPERATIONAL.

LT–08

MODEL: EX64 - Plan 9 [Sheet]
FILE NAME: F:\Projects\1089 - VV PH I-64 (206-045) - AMES\WO #4\Design\Shtlt 157\D876893-sheet IL 157 EXISTING.dgn

AMES Engineering, Inc.
CONSULTING ENGINEERS
6330 Belmont Road, Suite 4B
Downers Grove, IL 60516

USER NAME	= msomer	DESIGNED -	MH	REVISED -	
		DRAWN -	MD	REVISED -	
PLOT SCALE	= 0.16666633 ' / In.	CHECKED -	BL	REVISED -	
PLOT DATE	= 12/11/2024	DATE -	9-13-2024	REVISED -	

STATE OF ILLINOIS
DEPARTMENT OF TRANSPORTATION

REMOVAL AND TEMPORARY LIGHTING PLAN
IL 157 AND I–64

SCALE: 1"=50' | SHEET 9 OF 10 SHEETS | STA. 10+00 | TO STA. 19+00

F.A.I. RTE.	SECTION	COUNTY	TOTAL SHEETS	SHEET NO.
64	82-(4,5,6,7)-1RS-2	ST. CLAIR	388	276
		CONTRACT NO. 76R99		
	ILLINOIS FED. AID PROJECT			

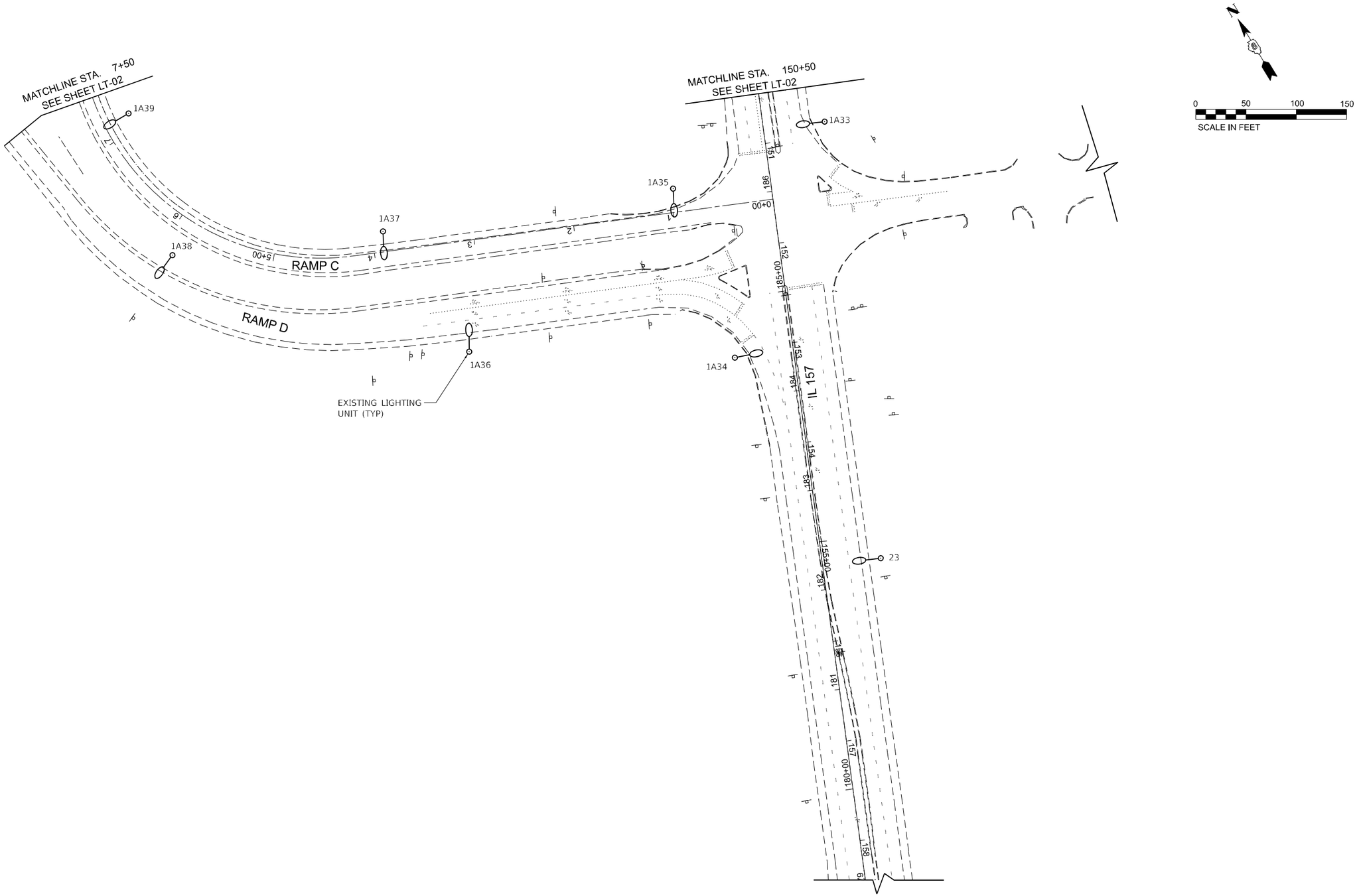

NOTES:

1. FOR GENERAL NOTES AND LEGEND, SEE SHEET LTN-01.
2. THE EXISTING LIGHTING UNITS AS SHOWN ON THIS PLAN SHALL BE USED AS TEMPORARY LIGHTING UNTIL PROPOSED LIGHTING IS INSTALLED AND OPERATIONAL.

LT–09

MODEL: EX64 - Plan 10 [Sheet]
FILE NAME: F:\Projects\1089 - VV PH I-II (206-045) - AMES\WO #4\Design\Sht\IL 157\D876899-sheet IL 157 EXISTING.dgn

AMES Engineering, Inc.
CONSULTING ENGINEERS
6330 Belmont Road, Suite 4B
Downers Grove, IL 60516

USER NAME = msomer	DESIGNED - MH	REVISED -	
	DRAWN - MD	REVISED -	
PLOT SCALE = 0.16666633 ' / In.	CHECKED - BL	REVISED -	
PLOT DATE = 12/11/2024	DATE - 9-13-2024	REVISED -	

STATE OF ILLINOIS
DEPARTMENT OF TRANSPORTATION

REMOVAL AND TEMPORARY LIGHTING PLAN
IL 157 AND I–64

SCALE: 1"=50' | SHEET 10 OF 10 SHEETS | STA. 150+00 | TO STA. 158+00

F.A.I. RTE.	SECTION	COUNTY	TOTAL SHEETS	SHEET NO.
64	82-(4,5,6,7)-1RS-2	ST. CLAIR	388	277
		CONTRACT NO. 76R99		
	ILLINOIS	FED. AID PROJECT		

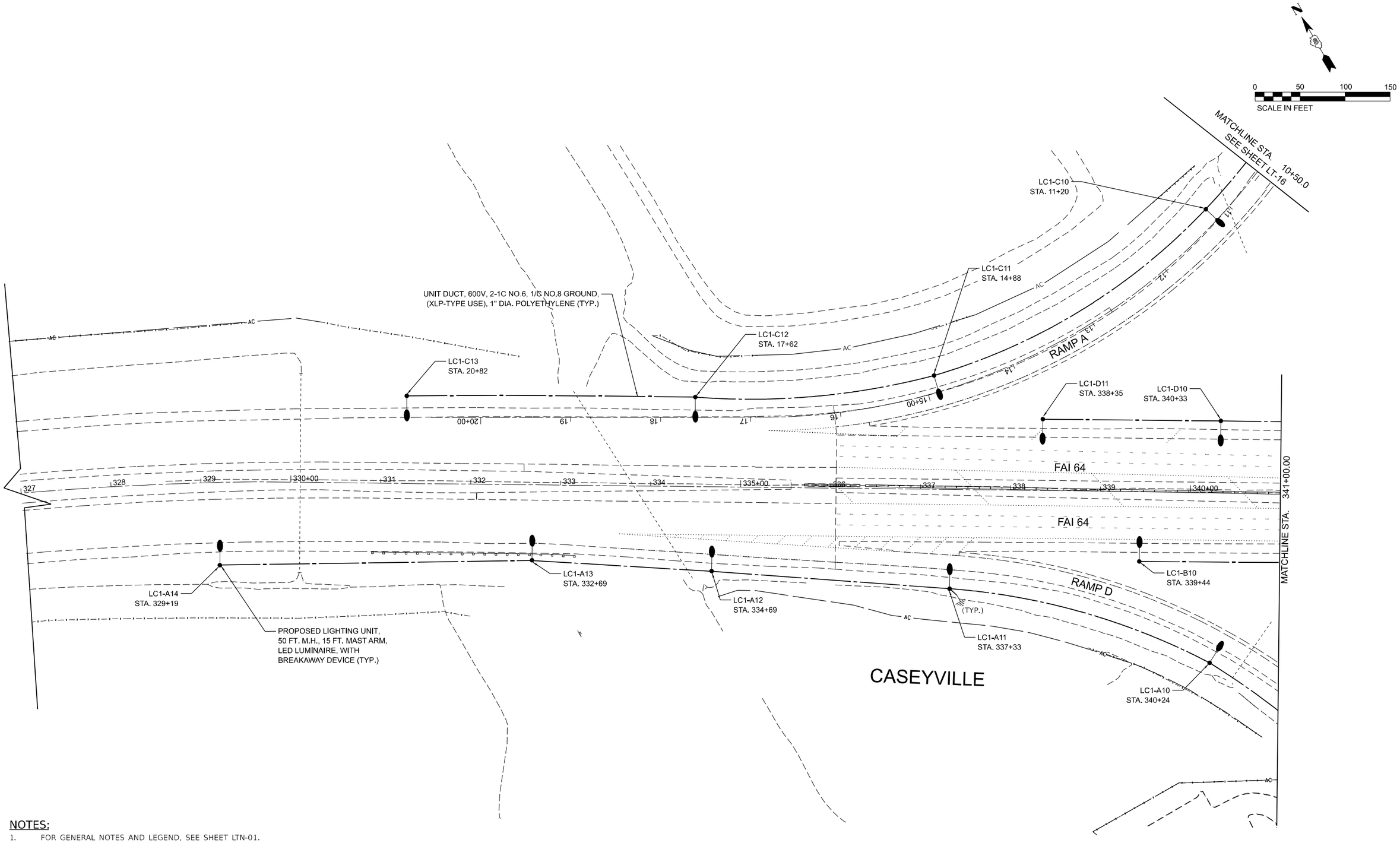

NOTES:

1. FOR GENERAL NOTES AND LEGEND, SEE SHEET LTN-01.
2. SETBACK IS 21 FT. FROM EDGE OF PAVEMENT TO CENTER OF LIGHT POLE, UNLESS NOTED OTHERWISE.

LT–10

MODEL: EX64 - Plan 1 (Sheet)
FILE NAME: F:\Projects\1089 - VV PH I\II (206-045) - AMES\WO #4\Design\Sht\IL 157\D876899-sheet IL 157 PROPOSED.dgn

AMES Engineering, Inc.
CONSULTING ENGINEERS
6330 Belmont Road, Suite 4B
Downers Grove, IL 60516

USER NAME = msomer	DESIGNED - MH	REVISED -	
	DRAWN - MD	REVISED -	
PLOT SCALE = 0.16666633 ' / in.	CHECKED - BL	REVISED -	
PLOT DATE = 12/11/2024	DATE - 9-13-2024	REVISED -	

STATE OF ILLINOIS
DEPARTMENT OF TRANSPORTATION

PROPOSED LIGHTING PLAN
IL 157 AND I–64

SCALE: 1"=50' | SHEET 1 OF 10 SHEETS | STA. 327+00 | TO STA. 341+00

F.A.I. RTE.	SECTION	COUNTY	TOTAL SHEETS	SHEET NO.
64	82-(4,5,6,7)-1RS-2	ST. CLAIR	388	278
		CONTRACT NO. 76R99		
	ILLINOIS	FED. AID PROJECT		

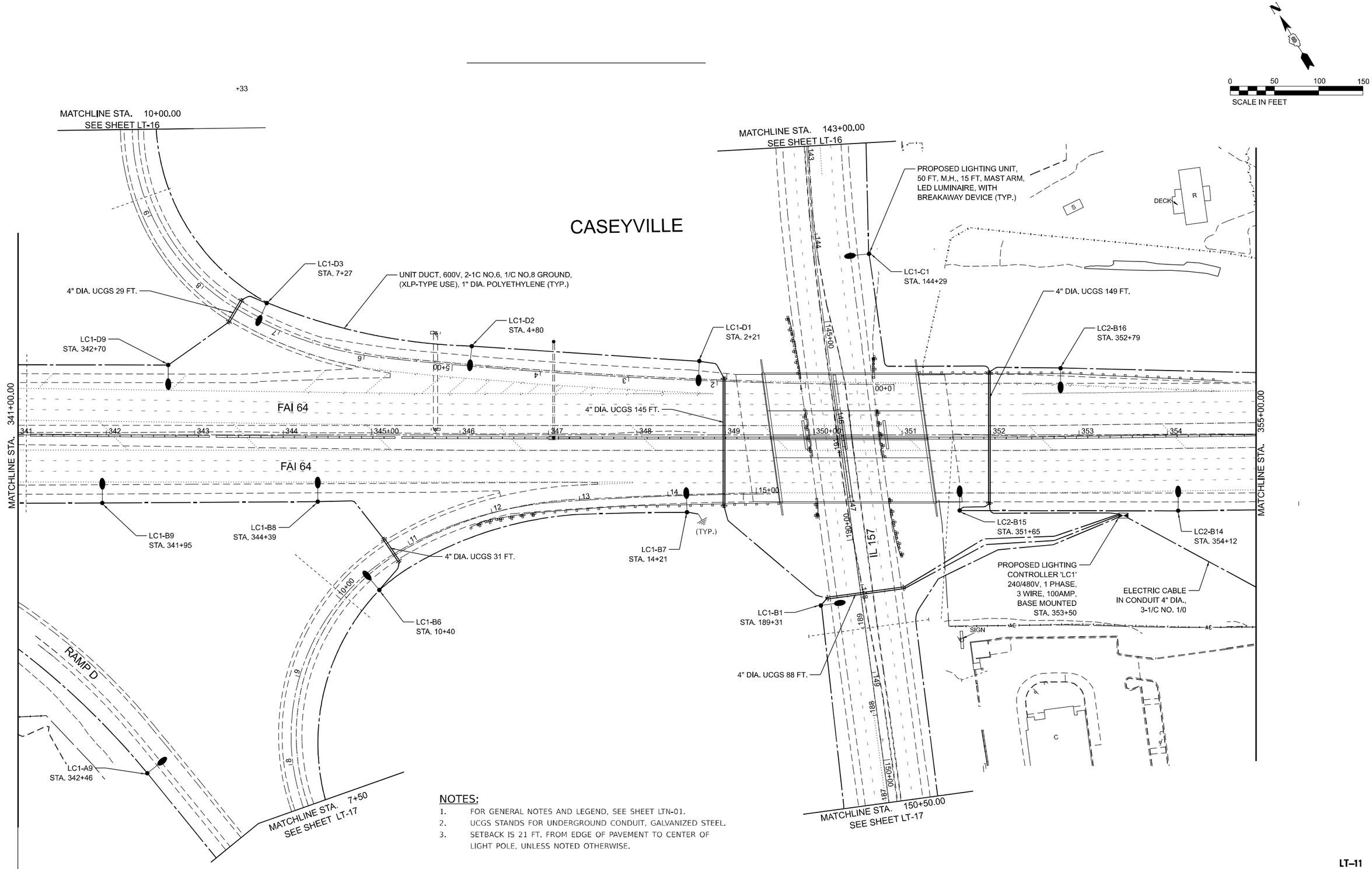

NOTES:

1. FOR GENERAL NOTES AND LEGEND, SEE SHEET LTN-01.
2. UCGS STANDS FOR UNDERGROUND CONDUIT, GALVANIZED STEEL.
3. SETBACK IS 21 FT. FROM EDGE OF PAVEMENT TO CENTER OF LIGHT POLE, UNLESS NOTED OTHERWISE.

LT–11

MODEL: EX64 - Plan 2 [Sheet]
FILE NAME: F:\Projects\1089 - VV PH I-II (206-045) - AMES\WO #4\Design\Sht\IL 157\D876R99-sheet IL 157 PROPOSED.dgn

AMES Engineering, Inc. CONSULTING ENGINEERS 6330 Belmont Road, Suite 4B Downers Grove, IL 60516	USER NAME = msomer	DESIGNED - MH	REVISED -	STATE OF ILLINOIS DEPARTMENT OF TRANSPORTATION	PROPOSED LIGHTING PLAN IL 157 AND I–64
		DRAWN - MD	REVISED -		
	PLOT SCALE = 0.16666633 ' / in.	CHECKED - BL	REVISED -		
	PLOT DATE = 12/11/2024	DATE - 9-13-2024	REVISED -		SCALE: 1"=50' SHEET 2 OF 10 SHEETS STA. 341+00 TO STA. 355+00

F.A.I. RTE.	SECTION	COUNTY	TOTAL SHEETS	SHEET NO.
64	82-(4,5,6,7)-1RS-2	ST. CLAIR	388	279
		CONTRACT NO. 76R99		
		ILLINOIS FED. AID PROJECT		

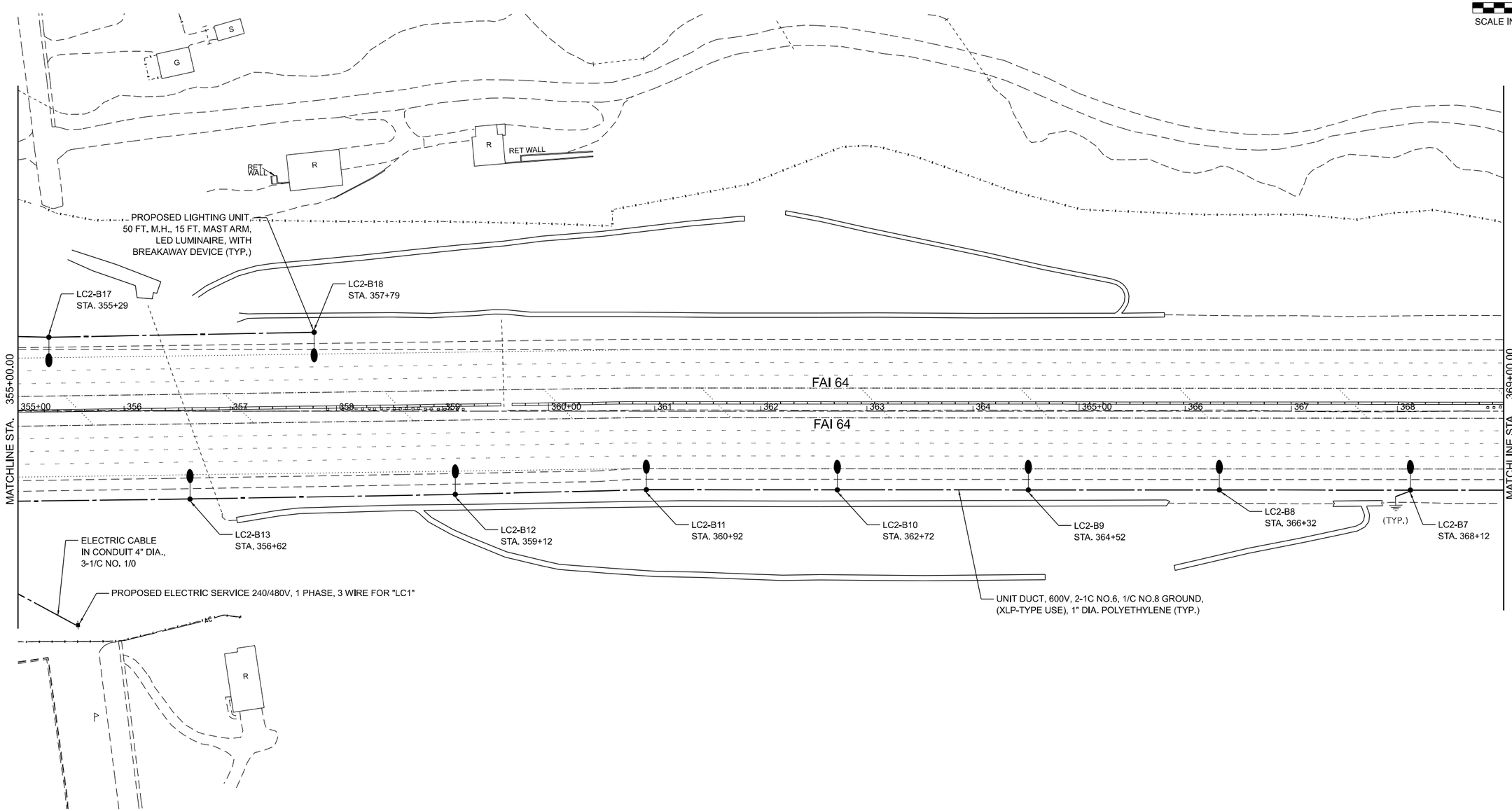

NOTES:

1. FOR GENERAL NOTES AND LEGEND, SEE SHEET LTN-01.
2. SETBACK IS 21 FT. FROM EDGE OF PAVEMENT TO CENTER OF LIGHT POLE, UNLESS NOTED OTHERWISE.

LT–12

AMES Engineering, Inc.
CONSULTING ENGINEERS
6330 Belmont Road, Suite 4B
Downers Grove, IL 60516

USER NAME = msomer	DESIGNED - MH	REVISED -	
	DRAWN - MD	REVISED -	
PLOT SCALE = 0.16666633 ' / in.	CHECKED - BL	REVISED -	
PLOT DATE = 12/11/2024	DATE - 9-13-2024	REVISED -	

STATE OF ILLINOIS
DEPARTMENT OF TRANSPORTATION

PROPOSED LIGHTING PLAN
IL 157 AND I–64

SCALE: 1"=50' | SHEET 3 OF 10 SHEETS | STA. 355+00 | TO STA. 369+00

F.A.I. RTE.	SECTION	COUNTY	TOTAL SHEETS	SHEET NO.
64	82-(4,5,6,7)-1RS-2	ST. CLAIR	388	280
		CONTRACT NO. 76R99		
	ILLINOIS FED. AID PROJECT			

MODEL: EX64 - Plan 3 [Sheet]
FILE NAME: F:\Projects\1089 - VV PH I-II (206-045) - AMES\WO #4\Design\Shtlt_157\D876899-sheet IL 157 PROPOSED.dgn

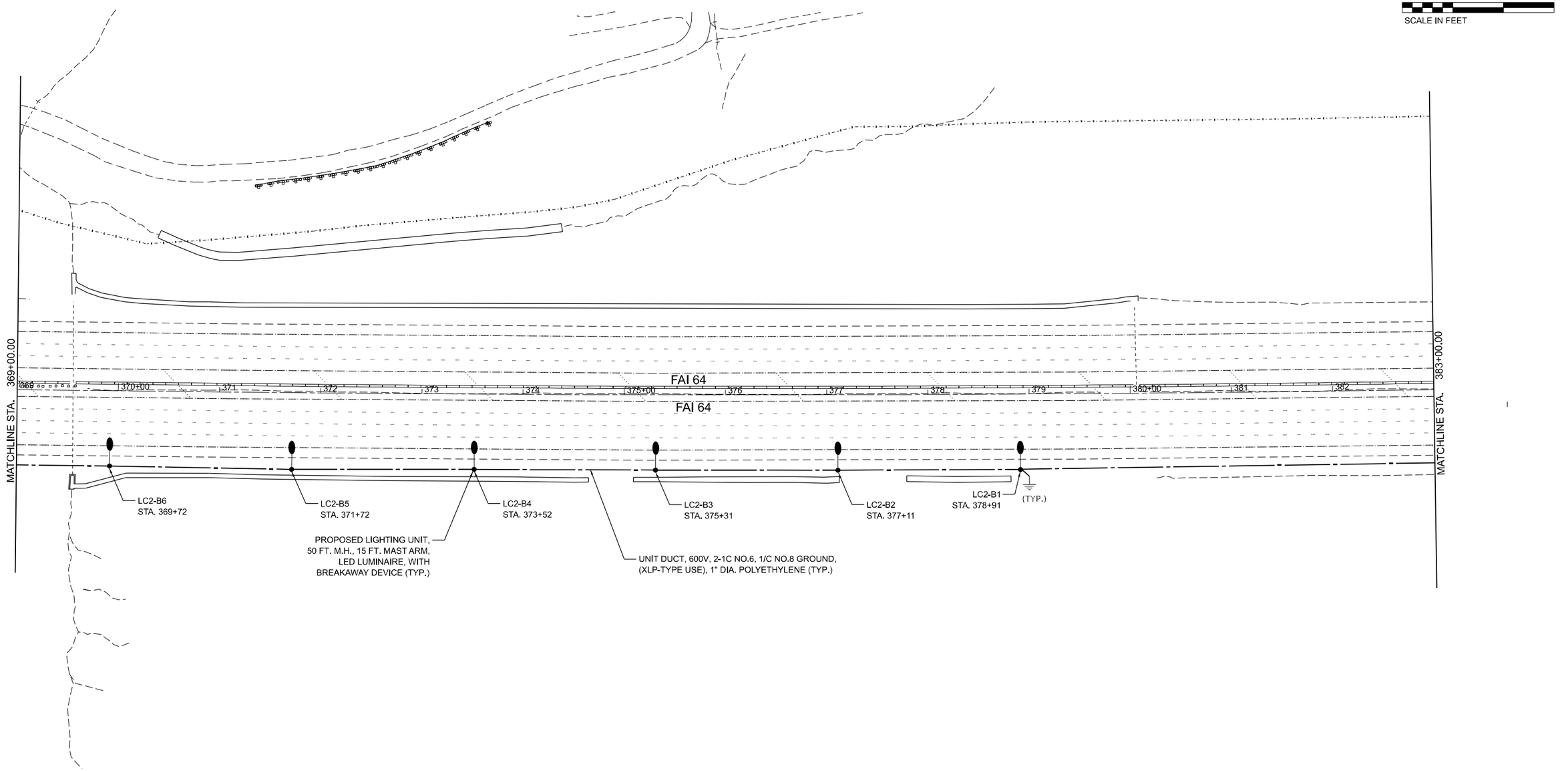

NOTES:

1. FOR GENERAL NOTES AND LEGEND, SEE SHEET LTN-01.
2. SETBACK IS 21 FT. FROM EDGE OF PAVEMENT TO CENTER OF LIGHT POLE, UNLESS NOTED OTHERWISE.

LT–13

MODEL: EX64 • Plan 4 [Sheet]
FILE NAME: F:\Projects\1089 • VV PH I-I (206043) • AMES\WO #4\Design\Shts\IL 157\D0876893-sheet IL 157 PROPOSED.dgn

AMES Engineering, Inc.
CONSULTING ENGINEERS
6330 Belmont Road, Suite 4B
Downers Grove, IL 60516

USER NAME = msomer	DESIGNED - MH	REVISED -	
	DRAWN - MD	REVISED -	
PLOT SCALE = 0.16666633 ' / in.	CHECKED - BL	REVISED -	
PLOT DATE = 12/11/2024	DATE - 9-13-2024	REVISED -	

STATE OF ILLINOIS
DEPARTMENT OF TRANSPORTATION

PROPOSED LIGHTING PLAN
IL 157 AND I–64

SCALE: 1"=50' | SHEET 4 OF 10 SHEETS | STA. 327+00 | TO STA. 341+00

F.A.I. RTE.	SECTION	COUNTY	TOTAL SHEETS	SHEET NO.
64	82-(4,5,6,7)-1RS-2	ST. CLAIR	388	281
		CONTRACT NO. 76R99		
	ILLINOIS FED. AID PROJECT			

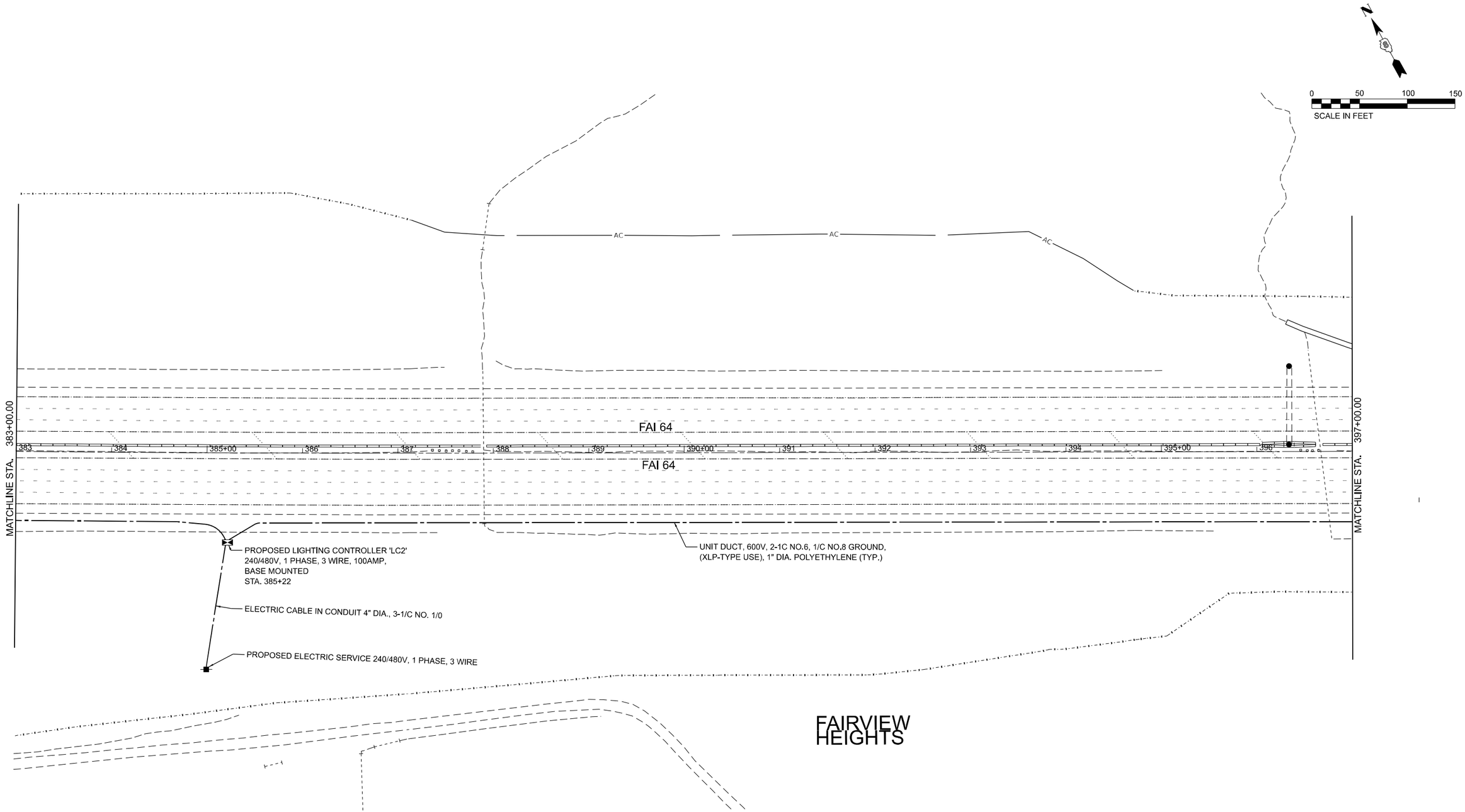

NOTES:

1. FOR GENERAL NOTES AND LEGEND, SEE SHEET LTN-01.
2. SETBACK IS 21 FT. FROM EDGE OF PAVEMENT TO CENTER OF LIGHT POLE, UNLESS NOTED OTHERWISE.

LT-14

AMES Engineering, Inc.
CONSULTING ENGINEERS
6330 Belmont Road, Suite 4B
Downers Grove, IL 60516

USER NAME = msomer	DESIGNED - MH	REVISED -	
	DRAWN - MD	REVISED -	
PLOT SCALE = 0.16666633 ' / in.	CHECKED - BL	REVISED -	
PLOT DATE = 12/11/2024	DATE - 9-13-2024	REVISED -	

STATE OF ILLINOIS
DEPARTMENT OF TRANSPORTATION

PROPOSED LIGHTING PLAN
IL 157 AND I-64

SCALE: 1"=50' | SHEET 5 OF 10 SHEETS | STA. 383+00 | TO STA. 397+00

F.A.I. RTE.	SECTION	COUNTY	TOTAL SHEETS	SHEET NO.
64	82-(4,5,6,7)-1RS-2	ST. CLAIR	388	282
		CONTRACT NO. 76R99		
	ILLINOIS	FED. AID PROJECT		

MODEL: EX64 - Plan 5 [Sheet]
FILE NAME: F:\Projects\1089 - VV PH I-II (206-045) - AMES\WO #4\Design\Sht\IL 157\D876899-sheet IL 157 PROPOSED.dgn

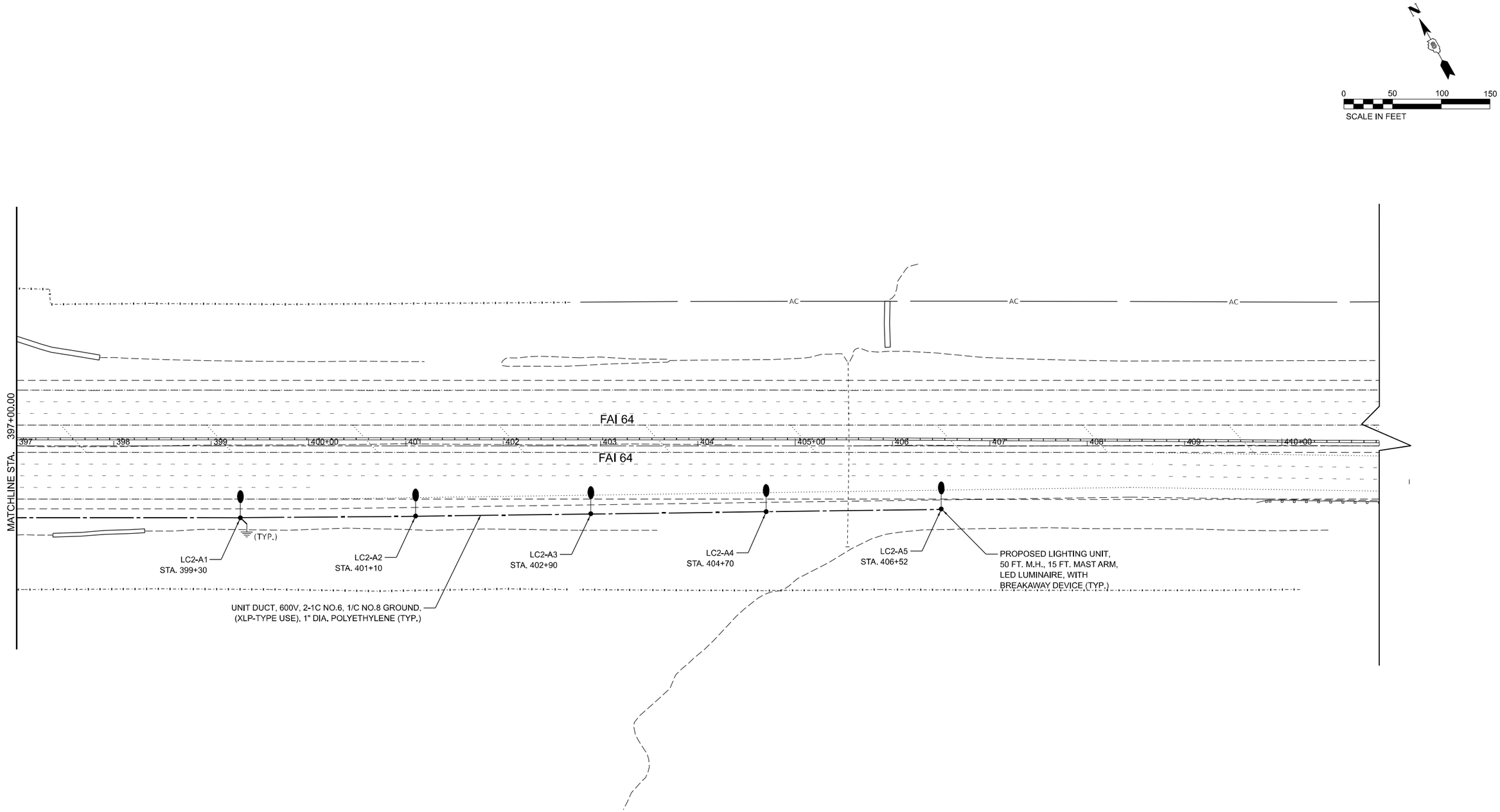

NOTES:

1. FOR GENERAL NOTES AND LEGEND, SEE SHEET LTN-01.
2. SETBACK IS 21 FT. FROM EDGE OF PAVEMENT TO CENTER OF LIGHT POLE, UNLESS NOTED OTHERWISE.

LT–15

AMES Engineering, Inc.
CONSULTING ENGINEERS
6330 Belmont Road, Suite 4B
Downers Grove, IL 60516

USER NAME = msomer	DESIGNED - MH	REVISED -	STATE OF ILLINOIS DEPARTMENT OF TRANSPORTATION	PROPOSED LIGHTING PLAN IL 157 AND I–64
	DRAWN - MD	REVISED -		
PLOT SCALE = 0.16666633 ' / in.	CHECKED - BL	REVISED -		
PLOT DATE = 12/1/2024	DATE - 9-13-2024	REVISED -		SCALE: 1"=50' SHEET 6 OF 10 SHEETS STA. 397+00 TO STA. 411+00

F.A.I. RTE.	SECTION	COUNTY	TOTAL SHEETS	SHEET NO.
64	82-(4,5,6,7)-1RS-2	ST. CLAIR	388	283
		CONTRACT NO. 76R99		
	ILLINOIS	FED. AID PROJECT		

MODEL: EX64 • Plan 6 [Sheet]
FILE NAME: F:\Projects\1089 - VV PH I-II (206-045) - AMES\WO #4\Design\Sht\IL 157\D876f699-Sheet IL 157 PROPOSED.dgn

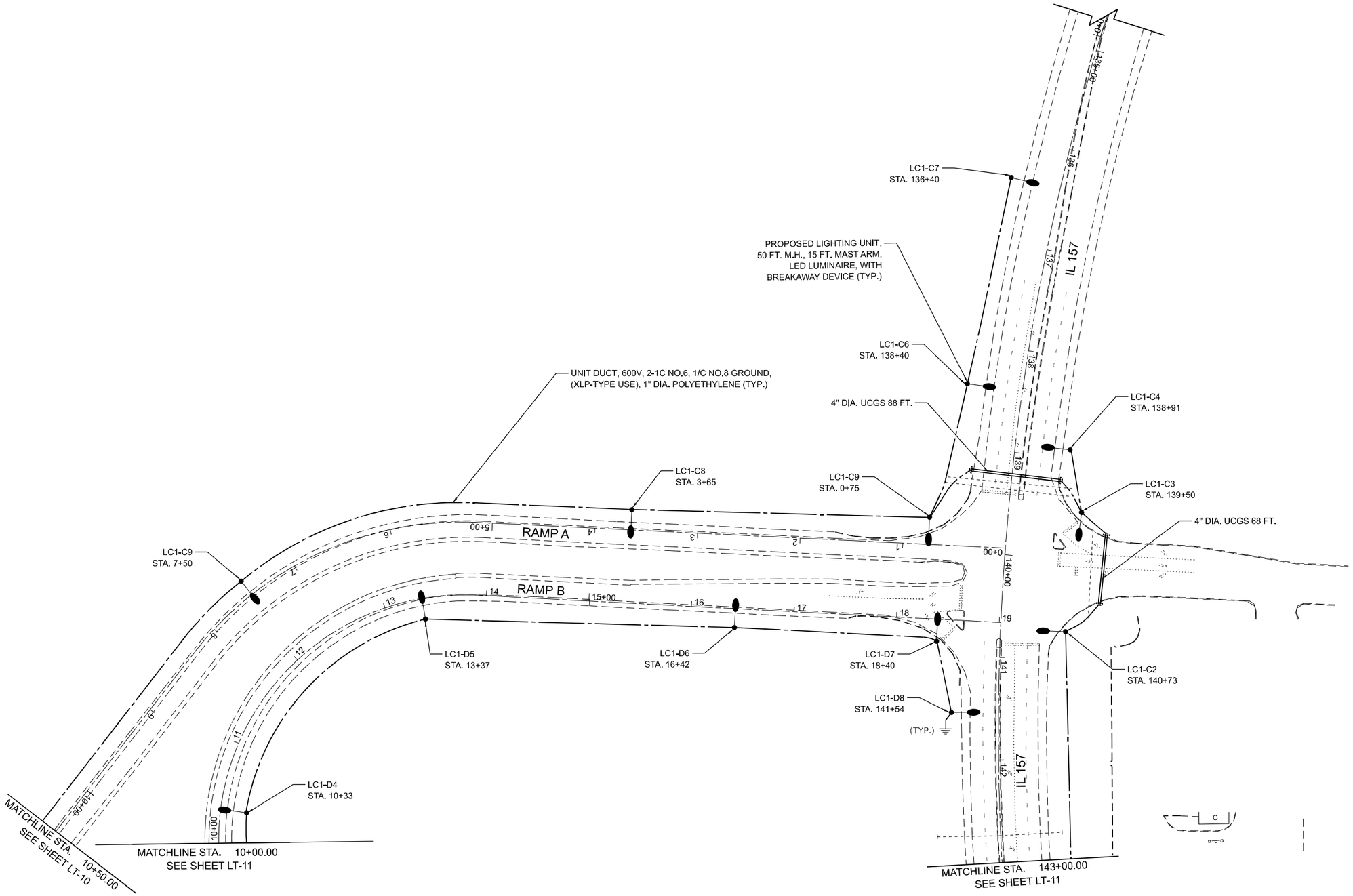

NOTES:

1. FOR GENERAL NOTES AND LEGEND, SEE SHEET LTN-01.
2. UCGS STANDS FOR UNDERGROUND CONDUIT, GALVANIZED STEEL.
3. SETBACK IS 21 FT. FROM EDGE OF PAVEMENT TO CENTER OF LIGHT POLE, UNLESS NOTED OTHERWISE.

LT–16

AMES Engineering, Inc.
CONSULTING ENGINEERS
6330 Belmont Road, Suite 4B
Downers Grove, IL 60516

USER NAME = msomer	DESIGNED - MH	REVISED -	
	DRAWN - MD	REVISED -	
PLOT SCALE = 0.16666633 ' / in.	CHECKED - BL	REVISED -	
PLOT DATE = 12/11/2024	DATE - 9-13-2024	REVISED -	

STATE OF ILLINOIS
DEPARTMENT OF TRANSPORTATION

PROPOSED LIGHTING PLAN
IL 157 AND I–64

SCALE: 1"=50' | SHEET 9 OF 10 SHEETS | STA. 10+00 TO STA. 19+00

F.A.I. RTE.	SECTION	COUNTY	TOTAL SHEETS	SHEET NO.
64	82-(4,5,6,7)-1RS-2	ST. CLAIR	388	284
		CONTRACT NO. 76R99		
	ILLINOIS	FED. AID PROJECT		

MODEL: EX64 - Plan 9 (Sheet)
FILE NAME: F:\Projects\1089 - VV PH I\I (206-045) - AMES\WO #4\Design\Shts\IL 157\D876899-sheet IL 157 PROPOSED.dgn

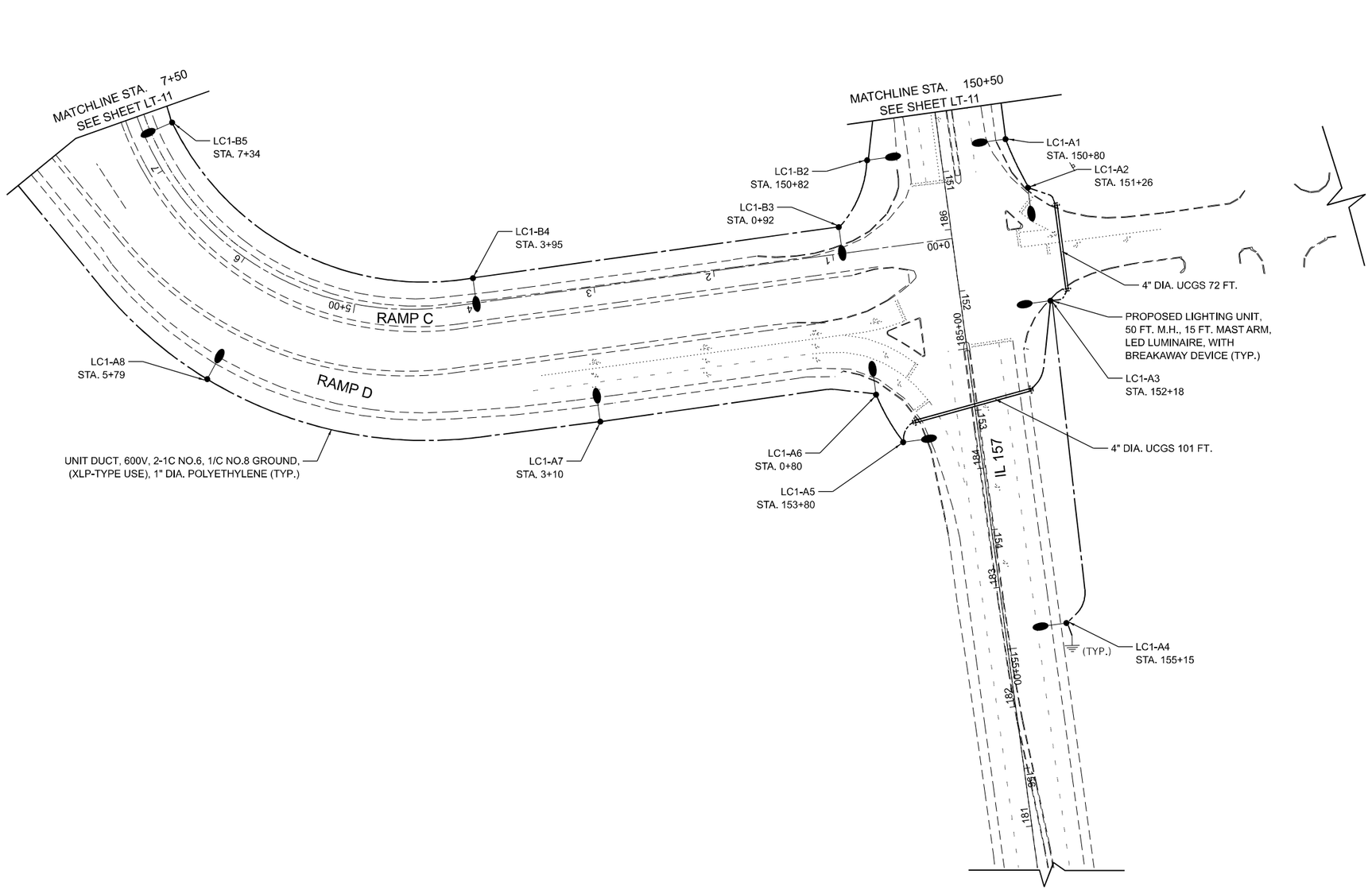

NOTES:

1. FOR GENERAL NOTES AND LEGEND, SEE SHEET LTN-01.
2. UCGS STANDS FOR UNDERGROUND CONDUIT, GALVANIZED STEEL.
3. SETBACK IS 21 FT. FROM EDGE OF PAVEMENT TO CENTER OF LIGHT POLE, UNLESS NOTED OTHERWISE.

LT–17

AMES Engineering, Inc.
CONSULTING ENGINEERS
6330 Belmont Road, Suite 4B
Downers Grove, IL 60516

USER NAME = msomer	DESIGNED - MH	REVISED -	
	DRAWN - MD	REVISED -	
PLOT SCALE = 0.16666633 ' / in.	CHECKED - BL	REVISED -	
PLOT DATE = 12/1/2024	DATE - 9-13-2024	REVISED -	

STATE OF ILLINOIS
DEPARTMENT OF TRANSPORTATION

PROPOSED LIGHTING PLAN
IL 157 AND I–64

SCALE: 1"=50' | SHEET 10 OF 10 SHEETS | STA. 150+00 TO STA. 158+00

F.A.I. RTE.	SECTION	COUNTY	TOTAL SHEETS	SHEET NO.
64	82-(4,5,6,7)-1RS-2	ST. CLAIR	388	285
		CONTRACT NO. 76R99		
	ILLINOIS	FED. AID PROJECT		

MODEL: EX64 • Plan 10 [Sheet]
FILE NAME: F:\Projects\1089 - VV PH I-II (206-045) • AMES\WO #4\Design\Sht\IL 157\D876R99~sheet IL 157 PROPOSED.dgn

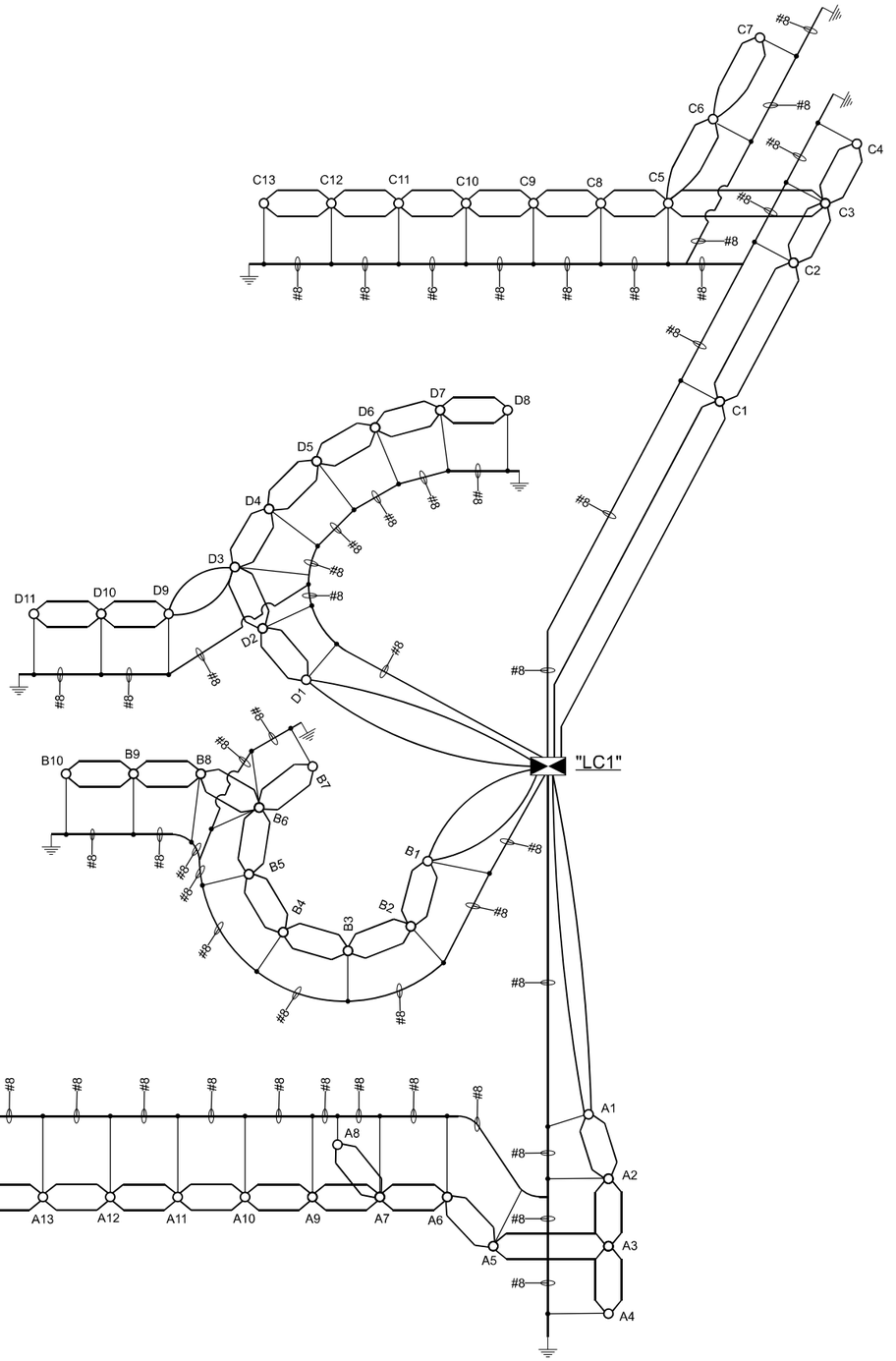

LEGEND

- PROPOSED LIGHTING CONTROLLER "LC1" 480V, 1 PHASE, 3 WIRE 100 AMP, WITH 20A 2P BRANCH CIRCUIT BREAKERS, BASE MOUNTED
- UNIT DUCT, 600V, 1C NO.6
- PROPOSED LIGHTING UNIT WITH LUMINAIRES OUTPUT DESIGNATION H
- GROUND ROD (AT EACH POLE PER STANDARDS)

LOAD TABLE LIGHTING CONTROLLER "LC1"

480V, A.C. 1 PHASE, 3 WIRE, 100A WITH 2P BRANCH CIRCUIT BREAKERS

CIRCUIT	TOTAL LUMINAIRES	TOTAL CURRENT IN AMPS	TOTAL WATTAGE
A	14	9.24	3,948
B	10	6.6	2,820
C	13	8.58	3,666
D	11	7.26	3,102
E	SPARE	-	-
F	SPARE	-	-
TOTAL	48	31.68	13,536

LT–18

MODEL: LC1 [Sheet]
FILE NAME: F:\Projects\1089 - VV PH I-II (206-045) - AMES\WO #4\Design\Shts\IL 157\D876899-Sheet Wiring Diagram IL 157 & I-64 LT-18.dgn

AMES Engineering, Inc.
CONSULTING ENGINEERS
6330 Belmont Road, Suite 4B
Downers Grove, IL 60516

USER NAME = msomer	DESIGNED - MH	REVISED -	
	DRAWN - SR	REVISED -	
PLOT SCALE = 0.16666633 ' / in.	CHECKED - BL	REVISED -	
PLOT DATE = 11/12/2024	DATE - 9-13-2024	REVISED -	

STATE OF ILLINOIS
DEPARTMENT OF TRANSPORTATION

WIRING DIAGRAM "LC1"
IL 157 AND I–64

SCALE: NONE | SHEET OF SHEETS | STA. | TO STA.

F.A.I. RTE.	SECTION	COUNTY	TOTAL SHEETS	SHEET NO.
64	82-(4,5,6,7)-1RS-2	ST. CLAIR	388	286
		CONTRACT NO. 76R99		
	ILLINOIS FED. AID PROJECT			

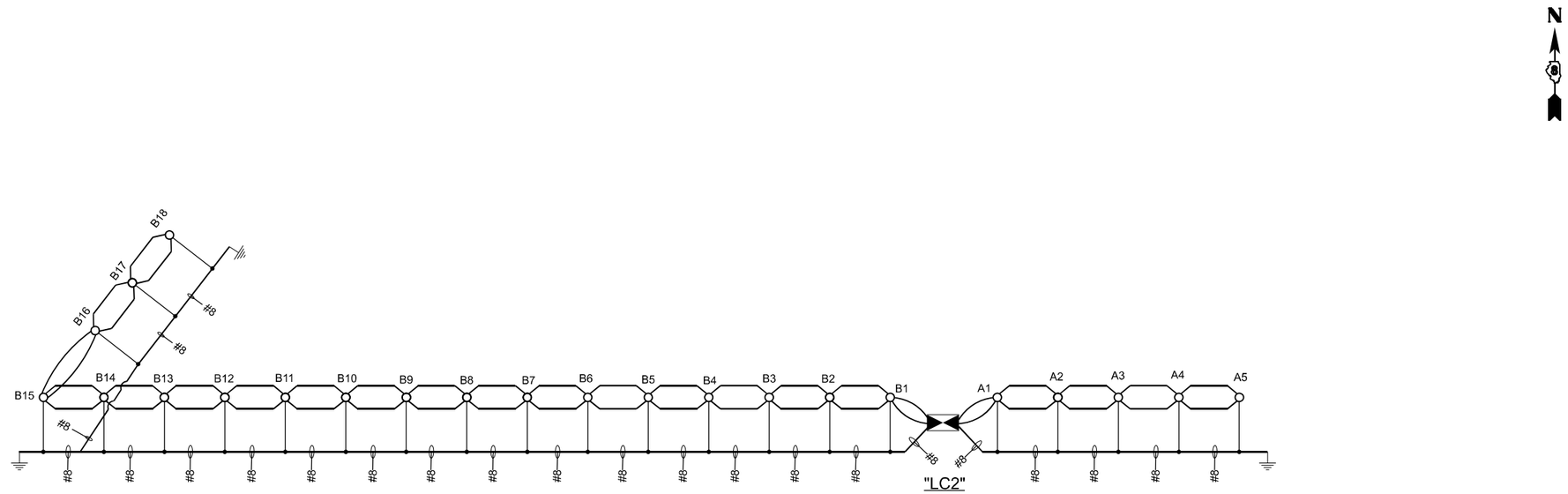

LEGEND

PROPOSED LIGHTING CONTROLLER "LC2" 480V, 1 PHASE, 3 WIRE 100 AMP, WITH 20A 2P BRANCH CIRCUIT BREAKERS, BASE MOUNTED

UNIT DUCT, 600V, 1C NO.6

PROPOSED LIGHTING UNIT WITH LUMINAIRES OUTPUT DESIGNATION H

GROUND ROD (AT EACH POLE PER STANDARDS)

LOAD TABLE LIGHTING CONTROLLER "LC2"

480V, A.C. 1 PHASE, 3 WIRE, 100A WITH 2P BRANCH CIRCUIT BREAKERS

CIRCUIT	TOTAL LUMINAIRES	TOTAL CURRENT IN AMPS	TOTAL WATTAGE
A	5	3.3	1,410
B	18	11.88	5,076
TOTAL	23	15.18	6,486

LT–19

MODEL: LC1 [Sheet]
FILE NAME: F:\Projects\1089 - VV PH I-II (206-045) - AMES\WO #4\Design\Sht\IL 157\D876R99-Sheet Wiring Diagram IL 157 & I-64 LT-19.dgn

AMES Engineering, Inc.
CONSULTING ENGINEERS
6330 Belmont Road, Suite 4B
Downers Grove, IL 60516

USER NAME = msomer	DESIGNED - MH	REVISED -	STATE OF ILLINOIS DEPARTMENT OF TRANSPORTATION
	DRAWN - SR	REVISED -	
PLOT SCALE = 0.16666633 ' / in.	CHECKED - BL	REVISED -	
PLOT DATE = 11/12/2024	DATE - 9-13-2024	REVISED -	

WIRING DIAGRAM "LC2"
IL 157 AND I–64

SCALE: NONE | SHEET OF SHEETS | STA. TO STA.

F.A.I. RTE.	SECTION	COUNTY	TOTAL SHEETS	SHEET NO.
64	82-(4,5,6,7)-1RS-2	ST. CLAIR	388	287

CONTRACT NO. 76R99

ILLINOIS FED. AID PROJECT

Illinois Department of Transportation

Luminaire Performance Table

Project

Date	Contract Number	Section Number	County
10/25/23	76R99	82-(4,5,6,7)-1R-2	St. Clair

Marked Route Number	Municipality
I-64	CASEYVILLE

Roadway

Lane Width	# of Lanes	Median Width	I.E.S. Surface Classification	Q-Zero Value
12 FT	4	N/A	R3	0.07

Structure

Mounting Height	Arm Length	Set-Back	Number of Luminaires (Highmast & Sign Lighting Only)
50 FT	15 FT	20 FT	

Luminaire

Description	I.E.S. Lateral Distribution	I.E.S. Vertical Distribution
ROADWAY, OUTPUT DESIGNATION H	TYPE II OR TYPE III	MEDIUM

Total Light Loss Factor (LLF)	B-U-G Rating	Shields	Dimming Protocol
0.7	U=0	N/A	N/A

Layout

Spacing (to Nearest 5 ft)	Configuration (Opposite, Staggered, 1 Sided, or Median)
275 FT	1 SIDED

Performance

Average Illuminance, E_{AVE} (fc)	Uniformity Ratio, E_{AVE}/E_{MIN}
0.9	3

Average Luminance, L_{AVE} (cd/m^2)	Uniformity Ratio, L_{AVE}/L_{MIN}	Uniformity Ratio, L_{MAX}/L_{MIN}	Veiling Luminance Ratio, L_V/L_{AVE}
0.6	3.5	6.0:1	0.3:1

Light Tresspass

Distance to ROW (behind pole)	Max. Horizontal Illuminance at ROW, E_H	Max. Vertical Illuminance at ROW, E_V
N/A	N/A	N/A

Notes

1. Set-Back is from Edge of Pavement (white line) except for sign luminaires when it is vertical and horizontal distance from the sign to the luminaire.
2. Lighting calculations shall be performed with all luminaires oriented toward and perpendicular to the roadway.
3. Total Light Loss Factor (LLF) = the product of "Lumen Maintenance" (LLD) = 0.9, "Dirt Depreciation" (LDD) = 0.8, and "Equipment Factors" (EF) = 0.95.
4. Performance requirements shall be the minimum acceptable standards of photometric performance for the luminaire, based on the given conditions listed above.

Compliance with performance criteria shall be held to one significant digit.

Initial lumens of the proposed luminaire may vary from the values specifies in the table given in Article 1067.06 of the BDE Special Provision for Luminaires, LED

Printed 10/25/23

BDE 5630 (04/10/19)

LT–20

AMES Engineering, Inc.
CONSULTING ENGINEERS
6330 Belmont Road, Suite 4B
Downers Grove, IL 60516

USER NAME = msomer	DESIGNED - MH	REVISED -	
	DRAWN - MD	REVISED -	
PLOT SCALE = 0.100 ' / In.	CHECKED - BL	REVISED -	
PLOT DATE = 11/12/2024	DATE - 9-13-2024	REVISED -	

STATE OF ILLINOIS
DEPARTMENT OF TRANSPORTATION

LUMINAIRE PERFORMANCE TABLE
IL 157 AND I–64

SCALE: NONE | SHEET 1 OF 1 SHEETS | STA. | TO STA.

F.A.I. RTE.	SECTION	COUNTY	TOTAL SHEETS	SHEET NO.
64	82-(4,5,6,7)-1RS-2	ST. CLAIR	388	288
		CONTRACT NO. 76R99		
	ILLINOIS	FED. AID PROJECT		

MODEL: Default
FILE NAME: F:\Projects\1089 - VV PH I-II (206-045) - AMES\WO #4\Design\Sht\IL 157\0876R99-sheet IL 157- Lum table.dgn

GENERAL NOTES:

1. THIS PROJECT INCLUDES THE INSTALLATION OF A NEW LIGHTING SYSTEM TO REPLACE THE EXISTING LIGHTING ALONG THE INTERCHANGE OF I-64 AND IL-159. THE PROPOSED LIGHTING SHALL BE OWNED AND MAINTAINED BY THE STATE OF ILLINOIS.
2. THE CONTRACTOR SHALL CONTACT THE ELECTRIC UTILITY COMPANY TO COORDINATE THE ELECTRIC SERVICE WORK.
3. THE QUANTITIES OF RACEWAY WHERE INDICATED ON THESE PLANS ARE APPROXIMATIONS ONLY. THE CONTRACTOR SHALL FIELD VERIFY ALL LENGTHS AND SHALL INSTALL RACEWAYS IN COMPLETE COMPLIANCE WITH THE SPECIFIED REQUIREMENTS.
4. THE CONTRACTOR SHALL NOTIFY J.U.L.I.E. TO LOCATE AND MARK/STAKE ALL UNDERGROUND UTILITIES.
5. THE DEPT. IS NOT A MEMBER OF J.U.L.I.E. AND DOES NOT LOCATE ITS OWN FACILITIES. THE APPLICANT AT THEIR OWN EXPENSE SHALL OBTAIN THE SERVICES OF A QUALIFIED ELECTRICAL CONTRACTOR TO LOCATE STATE-OWNED FACILITIES.
6. THE CONTRACTOR SHALL VERIFY LOCATIONS OF UNDERGROUND/OVERHEAD UTILITIES PRIOR TO INSTALLATION OF LIGHT POLES AND CONDUITS. IF THERE IS A CONFLICT WITH THE LIGHT POLES/CONDUITS AS SHOWN ON PLANS, THE CONTRACTOR SHALL SUGGEST ALTERNATIVE LOCATIONS AND COORDINATE WITH THE ENGINEER PRIOR TO PERFORMING ANY CONSTRUCTION WORK.
7. TRENCHES FOR LIGHTING RACEWAYS SHALL HAVE A MINIMUM DEPTH OF 30".
8. LIGHTING SYSTEM INSTALLATION SHALL CONFORM TO THE LATEST IDOT STANDARDS, NEC AND LOCAL CODES.
9. ALL ELECTRICAL EQUIPMENT AND PRODUCTS SHALL BE UL LISTED AND LABELED.
10. THE CONTRACTOR SHALL COORDINATE WITH EXISTING CONDITIONS WHEN INSTALLING UNIT DUCT TO AVOID CONFLICTS WITH EXISTING UNDERGROUND UTILITIES AND TREES ROOTS. THE CONTRACTOR SHALL BE RESPONSIBLE FOR ANY DAMAGE AS DETERMINED BY THE ENGINEER.
11. THE CONTRACTOR SHALL COORDINATE WITH EXISTING CONDITIONS WHEN INSTALLING LIGHT POLE FOUNDATIONS TO AVOID CONFLICTS WITH UNDERGROUND UTILITIES. WHEN CONFLICTS ARE ENCOUNTERED, THE CONTRACTOR SHALL REQUEST TO RELOCATE THE FOUNDATION. THE NEW LOCATION SHALL BE APPROVED BY THE ENGINEER PRIOR TO INSTALLATION.
12. GROUND RODS SHALL BE INSTALLED AT EACH LIGHTING UNIT.
13. EXISTING UNIT DUCT AND CONDUIT SHALL BE ABANDONED IN PLACE AFTER DISCONNECTING FROM THE POWER SOURCE.
14. EXISTING CABLE IN CONDUIT SHALL BE REMOVED FROM CONDUIT AND BECOME THE PROPERTY OF THE CONTRACTOR.

CALL-OUT DESCRIPTION



CIRCUIT NUMBER EXAMPLE

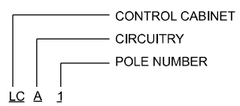

LIST OF STATE STANDARDS

805001-01	ELECTRICAL SERVICE INSTALLATION DETAILS
821101-02	LUMINAIRE WIRING IN POLE
825026-04	LIGHTING CONTRTOLLER BASE MOUNT 480V
830001-03	LIGHT POLE ALUMINUM MAST ARM
836001-04	LIGHT POLE FOUNDATION
838001-01	BREAKAWAY DEVICES

BILL OF MATERIALS

DESCRIPTION	UNIT	QUANTITY
ELECTRIC SERVICE INSTALLATION	EACH	2
UNDERGROUND CONDUIT, GALVANIZED STEEL, 4" DIA.	FOOT	509
UNIT DUCT, 600V, 2-1C NO.6, 1/C NO.8 GROUND, (XLP-TYPE USE), 1" DIA. POLYETHYLENE	FOOT	16,109
ELECTRIC CABLE IN CONDUIT, 600V (XLP-TYPE USE) 1/C NO. 1/0	FOOT	300
LUMINAIRE, LED, ROADWAY, OUTPUT DESIGNATION H	EACH	72
LIGHTING CONTROLLER, BASE MOUNTED, 480VOLT, 100AMP	EACH	2
LIGHT POLE, ALUMINUM, 50 FT. M.H., 15 FT. MAST ARM	EACH	72
LIGHT POLE FOUNDATION, 30" DIAMETER	FOOT	504
BREAKAWAY DEVICE, TRANSFORMER BASE, 15 INCH BOLT CIRCLE	EACH	72
REMOVAL OF LIGHTING UNIT, NO SALVAGE	EACH	69
REMOVAL OF POLE FOUNDATION	EACH	69
REMOVAL OF LIGHTING CONTROLLER	EACH	1
REMOVAL OF ELECTRIC SERVICE INSTALLATION	EACH	1
REMOVAL OF LIGHTING CONTROLLER FOUNDATION	EACH	1
REMOVAL OF EXISTING SIGN LIGHTING UNIT WITH NO SALVAGE	EACH	2
REMOVE CABLE FROM CONDUIT	FOOT	830

LEGEND

	EXISTING LIGHTING UNIT TO BE REMOVED
	PROPOSED LIGHTING UNIT, 50 FT. MH, 15 FT. MAST ARM, UNLESS OTHERWISE INDICATED, (480V - PHASE TO PHASE) LED LUMINAIRE, OUTPUT DESIGNATION H WITH BREAKAWAY DEVICE AND 17" BOLT CIRCLE FOUNDATION
	UNIT DUCT, 600V, 2-1C #6, 1/C #8 GROUND, (XLP-TYPE USE) 1" DIA. POLYETHYLENE
	ELECTRIC SERVICE 240/480V, 1 PHASE, 3 WIRE
	PROPOSED LIGHTING CONTROLLER 480V, 1 PHASE, 3 WIRE 100 AMP, BASE MOUNTED
	EXISTING LIGHTING CONTROLLER
	UNDERGROUND CONDUIT GALVANIZED STEEL
	ELECTRIC CABLE IN CONDUIT 4" DIA., 3-1/C NO. 1/0
	GROUND ROD 5/8" X 10 FT.

LTN–01

AMES Engineering, Inc.
CONSULTING ENGINEERS
6330 Belmont Road, Suite 4B
Downers Grove, IL 60516

USER NAME = msomer		DESIGNED - MH		REVISED -	
		DRAWN - MD		REVISED -	
PLOT SCALE = 0.16666633 ' / in.		CHECKED - BL		REVISED -	
PLOT DATE = 11/12/2024		DATE - 9-13-2024		REVISED -	

STATE OF ILLINOIS
DEPARTMENT OF TRANSPORTATION

LIGHTING GENERAL NOTES, BILL OF MATERIALS AND LEGEND
IL 159 AND I–64

SCALE: NONE | SHEET 1 OF 1 SHEETS | STA. | TO STA.

F.A.I. RTE.	SECTION	COUNTY	TOTAL SHEETS	SHEET NO.
64	82-(4,5,6,7)-1RS-2	ST. CLAIR	388	289
		CONTRACT NO. 76R99		
	ILLINOIS	FED. AID PROJECT		

MODEL: GEN1 [Sheet]
FILE NAME: F:\Projects\1089 - VV PH HI (206-045) - AMES\WO #4\Design\Sht\IL 159\087689\sheet il 159 - General Notes.dgn

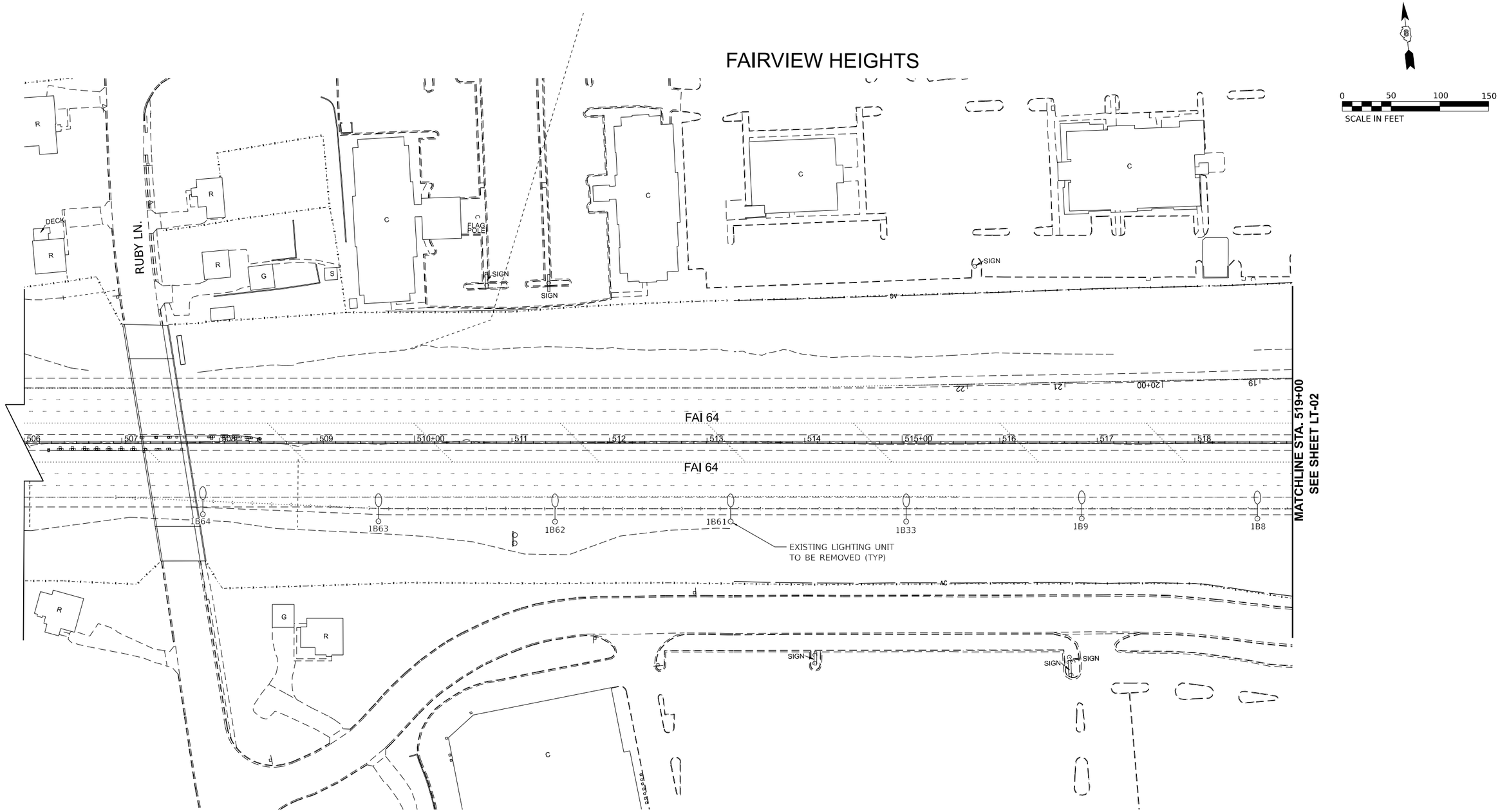

NOTES:

1. FOR GENERAL NOTES AND LEGEND, SEE SHEET LTN-01.
2. THE EXISTING LIGHTING UNITS AS SHOWN ON THIS PLAN SHALL BE USED AS TEMPORARY LIGHTING UNTIL PROPOSED LIGHTING IS INSTALLED AND OPERATIONAL.

LT–01

MODEL: Plan 1 [Sheet]
FILE NAME: P:\Projects\1089 - VV PH I-II (206-045) - AMES\WO #4\Design\Shts\IL 159\D076R99-sheet II 159 EXISTING.dgn

AMES Engineering, Inc.
CONSULTING ENGINEERS
6330 Belmont Road, Suite 4B
Downers Grove, IL 60516

USER NAME = msomer	DESIGNED - MH	REVISED -	
	DRAWN - MD/SR	REVISED -	
PLOT SCALE = 0.16666633 ' / in.	CHECKED - BL	REVISED -	
PLOT DATE = 11/12/2024	DATE - 9-13-2024	REVISED -	

STATE OF ILLINOIS
DEPARTMENT OF TRANSPORTATION

REMOVAL AND TEMPORARY LIGHTING PLAN
IL 159 AND I–64

SCALE: 1"=50' | SHEET 1 OF 8 SHEETS | STA. 506+00 | TO STA. 519+00

F.A.I. RTE.	SECTION	COUNTY	TOTAL SHEETS	SHEET NO.
64	82-(4,5,6,7)-1RS-2	ST. CLAIR	388	290
		CONTRACT NO. 76R99		
		ILLINOIS	FED. AID PROJECT	

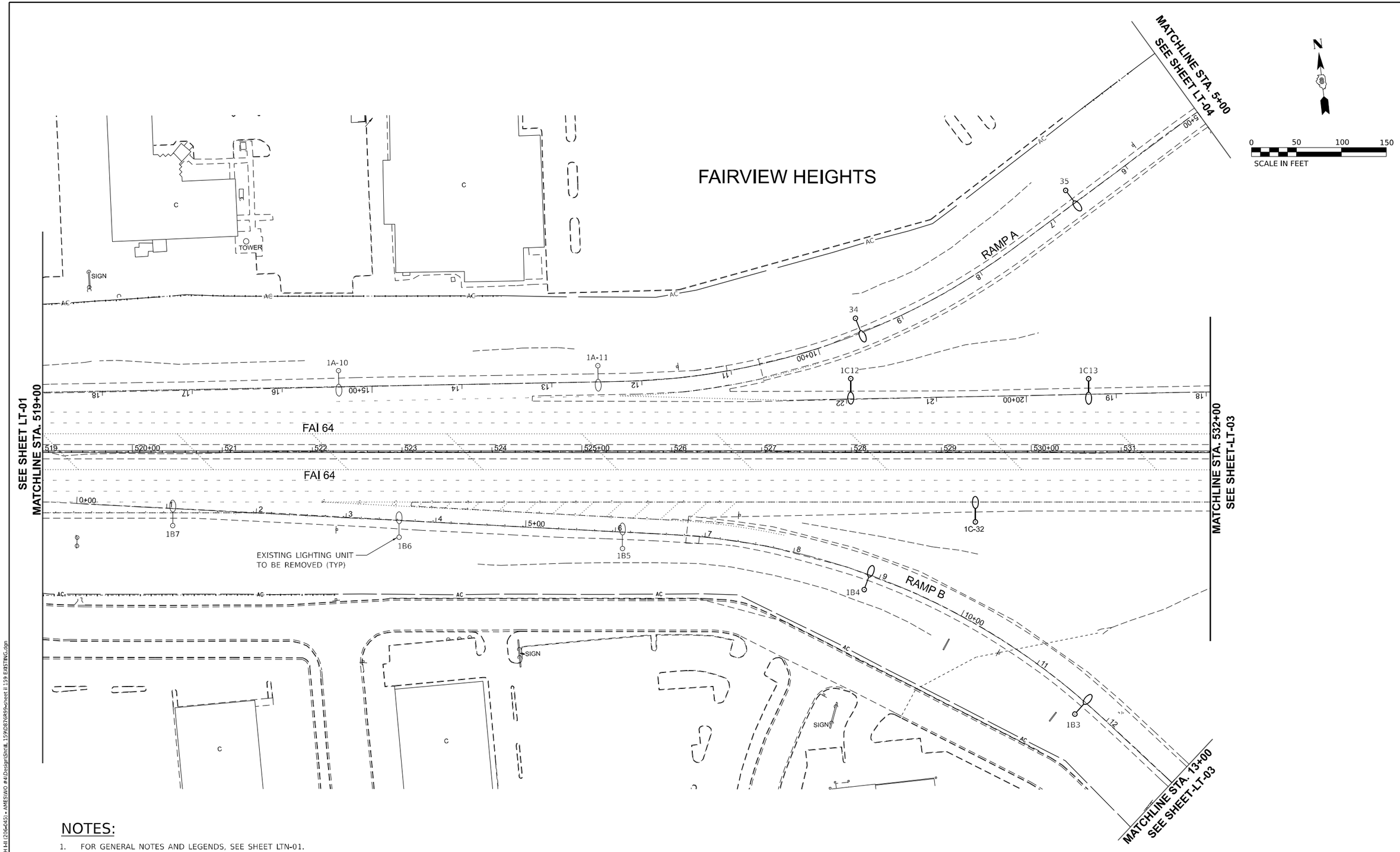

NOTES:

1. FOR GENERAL NOTES AND LEGENDS, SEE SHEET LTN-01.
2. THE EXISTING LIGHTING UNITS AS SHOWN ON THIS PLAN SHALL BE USED AS TEMPORARY LIGHTING UNTIL PROPOSED LIGHTING IS INSTALLED AND OPERATIONAL.

LT–02

MODEL: Plan 2 [Sheet]
FILE NAME: F:\Projects\1089 - VV PH I-II (206-045) - AMES\WO #4\Design\Sht\IL 159\D876R99-sheet il 159 EXISTING.dgn

AMES Engineering, Inc. CONSULTING ENGINEERS 6330 Belmont Road, Suite 4B Downers Grove, IL 60516	USER NAME = msomer	DESIGNED - MH	REVISED -	STATE OF ILLINOIS DEPARTMENT OF TRANSPORTATION	REMOVAL AND TEMPORARY LIGHTING PLAN IL 159 AND I–64
		DRAWN - MD/SR	REVISED -		
	PLOT SCALE = 0.16666633 ' / in.	CHECKED - BL	REVISED -		
	PLOT DATE = 11/12/2024	DATE - 9-13-2024	REVISED -		SCALE: 1"=50' SHEET 2 OF 8 SHEETS STA. 519+00 TO STA. 532+00

F.A.I. RTE.	SECTION	COUNTY	TOTAL SHEETS	SHEET NO.
64	82-(4,5,6,7)-1RS-2	ST. CLAIR	388	291
		CONTRACT NO. 76R99		
		ILLINOIS	FED. AID PROJECT	

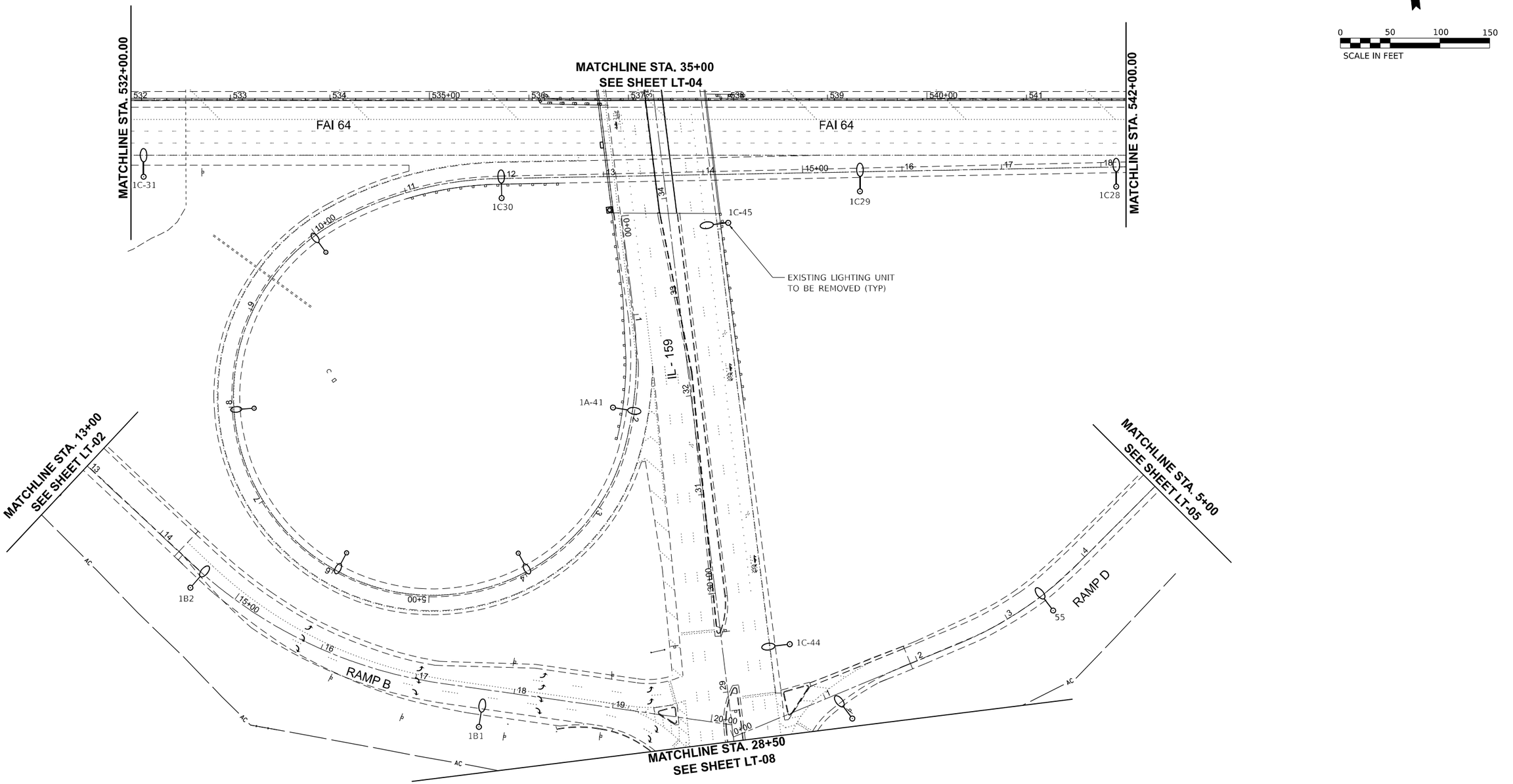

NOTES:

1. FOR GENERAL NOTES AND LEGENDS, SEE SHEET LTN-01.
2. THE EXISTING LIGHTING UNITS AS SHOWN ON THIS PLAN SHALL BE USED AS TEMPORARY LIGHTING UNTIL PROPOSED LIGHTING IS INSTALLED AND OPERATIONAL.

LT–03

MODEL: Plan 3 [Sheet]
FILE NAME: F:\Projects\1089 - VV PH I-II (206-045) - AMES\WO #4\Design\Sht\IL 159\0B76R99~sheet il 159 EXISTING.dgn

AMES Engineering, Inc. CONSULTING ENGINEERS 6330 Belmont Road, Suite 4B Downers Grove, IL 60516	USER NAME = msomer	DESIGNED - MH	REVISED -	**STATE OF ILLINOIS** **DEPARTMENT OF TRANSPORTATION**	**REMOVAL AND TEMPORARY LIGHTING PLAN** **IL 159 AND I–64**
		DRAWN - MD/SR	REVISED -		
	PLOT SCALE = 0.16666633 ' / In.	CHECKED - BL	REVISED -		SCALE: 1"=50' | SHEET 3 OF 8 SHEETS | STA. 532+00 TO STA. 542+00
	PLOT DATE = 11/12/2024	DATE - 9-13-2024	REVISED -		

F.A.I. RTE.	SECTION	COUNTY	TOTAL SHEETS	SHEET NO.
64	82-(4,5,6,7)-1RS-2	ST. CLAIR	388	292
		CONTRACT NO. 76R99		
	ILLINOIS FED. AID PROJECT			

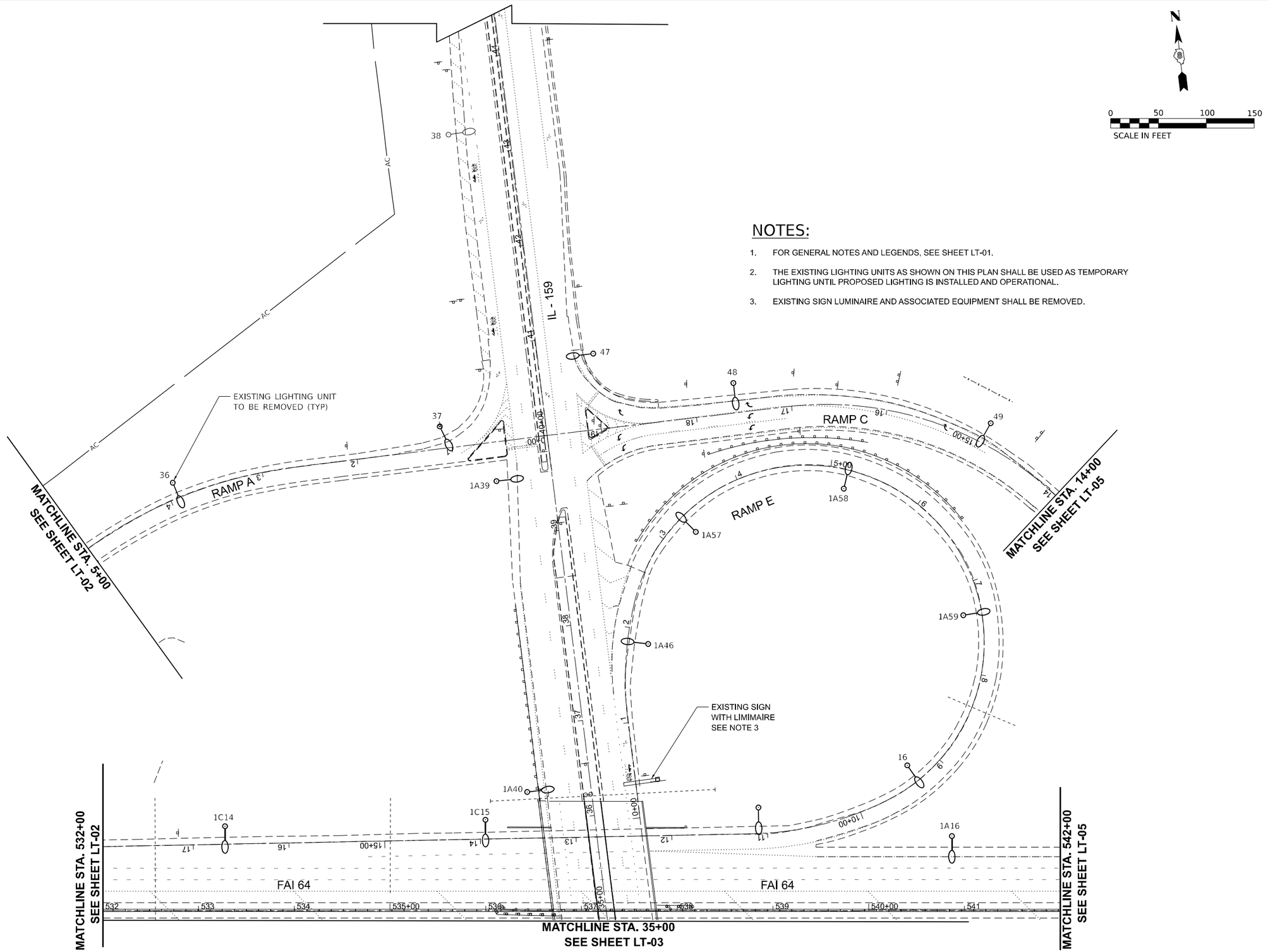

NOTES:

1. FOR GENERAL NOTES AND LEGENDS, SEE SHEET LT-01.
2. THE EXISTING LIGHTING UNITS AS SHOWN ON THIS PLAN SHALL BE USED AS TEMPORARY LIGHTING UNTIL PROPOSED LIGHTING IS INSTALLED AND OPERATIONAL.
3. EXISTING SIGN LUMINAIRE AND ASSOCIATED EQUIPMENT SHALL BE REMOVED.

LT–04

MODEL: Plan 4 [Sheet]
FILE NAME: F:\Projects\1089 - VV PH I-II (206-045) - AMES\WO #4\Design\Shtlt_159\D876899-sheet II 159 EXISTING.dgn

AMES Engineering, Inc.
CONSULTING ENGINEERS
6330 Belmont Road, Suite 4B
Downers Grove, IL 60516

USER NAME = msomer	DESIGNED - MH	REVISED -	
	DRAWN - MD/SR	REVISED -	
PLOT SCALE = 0.16666633 ' / in.	CHECKED - BL	REVISED -	
PLOT DATE = 11/12/2024	DATE - 9-13-2024	REVISED -	

STATE OF ILLINOIS
DEPARTMENT OF TRANSPORTATION

REMOVAL AND TEMPORARY LIGHTING PLAN
IL 159 AND I–64

SCALE: 1"=50' | SHEET 4 OF 8 SHEETS | STA. 532+00 | TO STA. 542+00

F.A.I. RTE.	SECTION	COUNTY	TOTAL SHEETS	SHEET NO.
64	82-(4,5,6,7)-1RS-2	ST. CLAIR	388	293
		CONTRACT NO. 76R99		
	ILLINOIS FED. AID PROJECT			

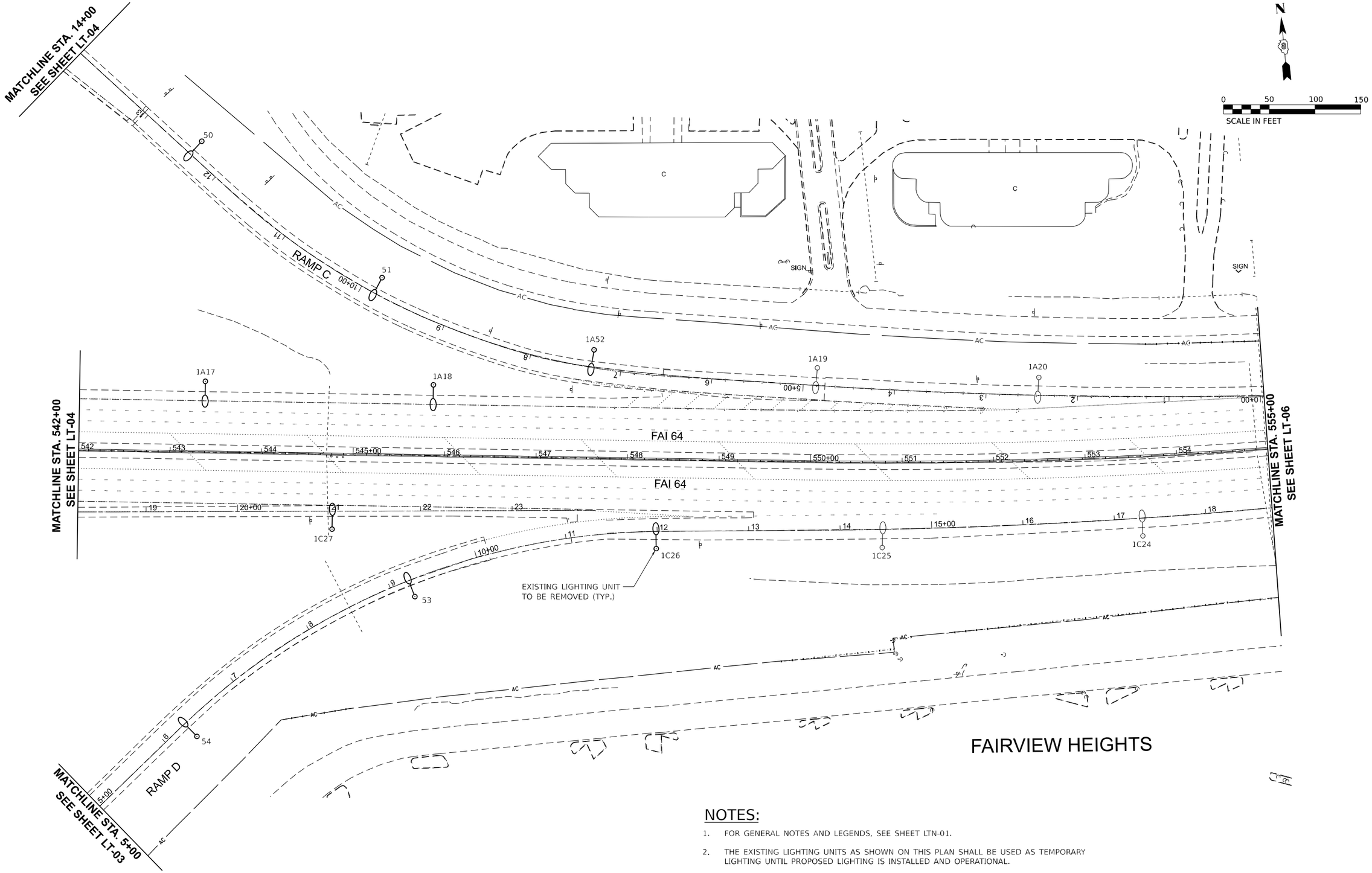

NOTES:

1. FOR GENERAL NOTES AND LEGENDS, SEE SHEET LTN-01.
2. THE EXISTING LIGHTING UNITS AS SHOWN ON THIS PLAN SHALL BE USED AS TEMPORARY LIGHTING UNTIL PROPOSED LIGHTING IS INSTALLED AND OPERATIONAL.

LT–05

MODEL: Plan 5 [Sheet]
FILE NAME: F:\Projects\1089 - VV PH I-II (206-045) - AMES\WO #4\Design\Sht\IL 159\D876R99-sheet il 159 EXISTING.dgn

AMES Engineering, Inc. CONSULTING ENGINEERS 6330 Belmont Road, Suite 4B Downers Grove, IL 60516	USER NAME = msomer	DESIGNED - MH	REVISED -	STATE OF ILLINOIS DEPARTMENT OF TRANSPORTATION	REMOVAL AND TEMPORARY LIGHTING PLAN IL 159 AND I–64
		DRAWN - MD/SR	REVISED -		
	PLOT SCALE = 0.16666633 ' / in.	CHECKED - BL	REVISED -		
	PLOT DATE = 11/12/2024	DATE - 9-13-2024	REVISED -		SCALE: 1"=50' SHEET 5 OF 8 SHEETS STA. 542+00 TO STA. 555+00

F.A.I. RTE.	SECTION	COUNTY	TOTAL SHEETS	SHEET NO.
64	82-(4,5,6,7)-1RS-2	ST. CLAIR	388	294
		CONTRACT NO. 76R99		
		ILLINOIS	FED. AID PROJECT	

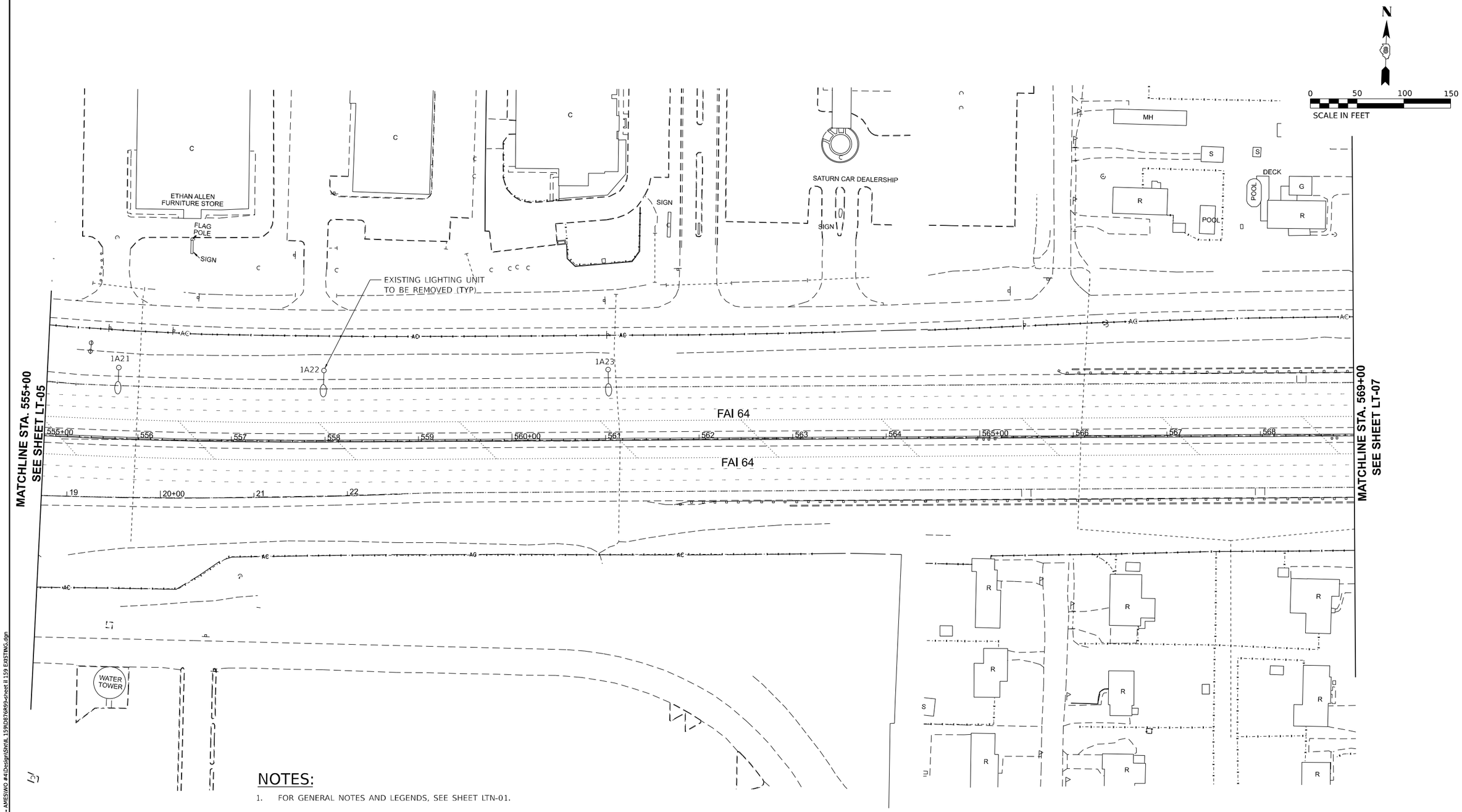

NOTES:

1. FOR GENERAL NOTES AND LEGENDS, SEE SHEET LTN-01.
2. THE EXISTING LIGHTING UNITS AS SHOWN ON THIS PLAN SHALL BE USED AS TEMPORARY LIGHTING UNTIL PROPOSED LIGHTING IS INSTALLED AND OPERATIONAL.

LT–06

MODEL: Plan 6 [Sheet]
FILE NAME: F:\Projects\1089 - VV PH I-II (206-045) - AMES\WO #4\Design\Sht\IL 159\D876R99-sheet il 159 EXISTING.dgn

AMES Engineering, Inc.
CONSULTING ENGINEERS
6330 Belmont Road, Suite 4B
Downers Grove, IL 60516

USER NAME = msomer	DESIGNED - MH	REVISED -	
	DRAWN - MD/SR	REVISED -	
PLOT SCALE = 0.16666633 ' / in.	CHECKED - BL	REVISED -	
PLOT DATE = 11/12/2024	DATE - 9-13-2024	REVISED -	

STATE OF ILLINOIS
DEPARTMENT OF TRANSPORTATION

REMOVAL AND TEMPORARY LIGHTING PLAN
IL 159 AND I–64

SCALE: 1"=50' | SHEET 6 OF 8 SHEETS | STA. 555+00 TO STA. 569+00

F.A.I. RTE.	SECTION	COUNTY	TOTAL SHEETS	SHEET NO.
64	82-(4,5,6,7)-1RS-2	ST. CLAIR	388	295
		CONTRACT NO. 76R99		
		ILLINOIS	FED. AID PROJECT	

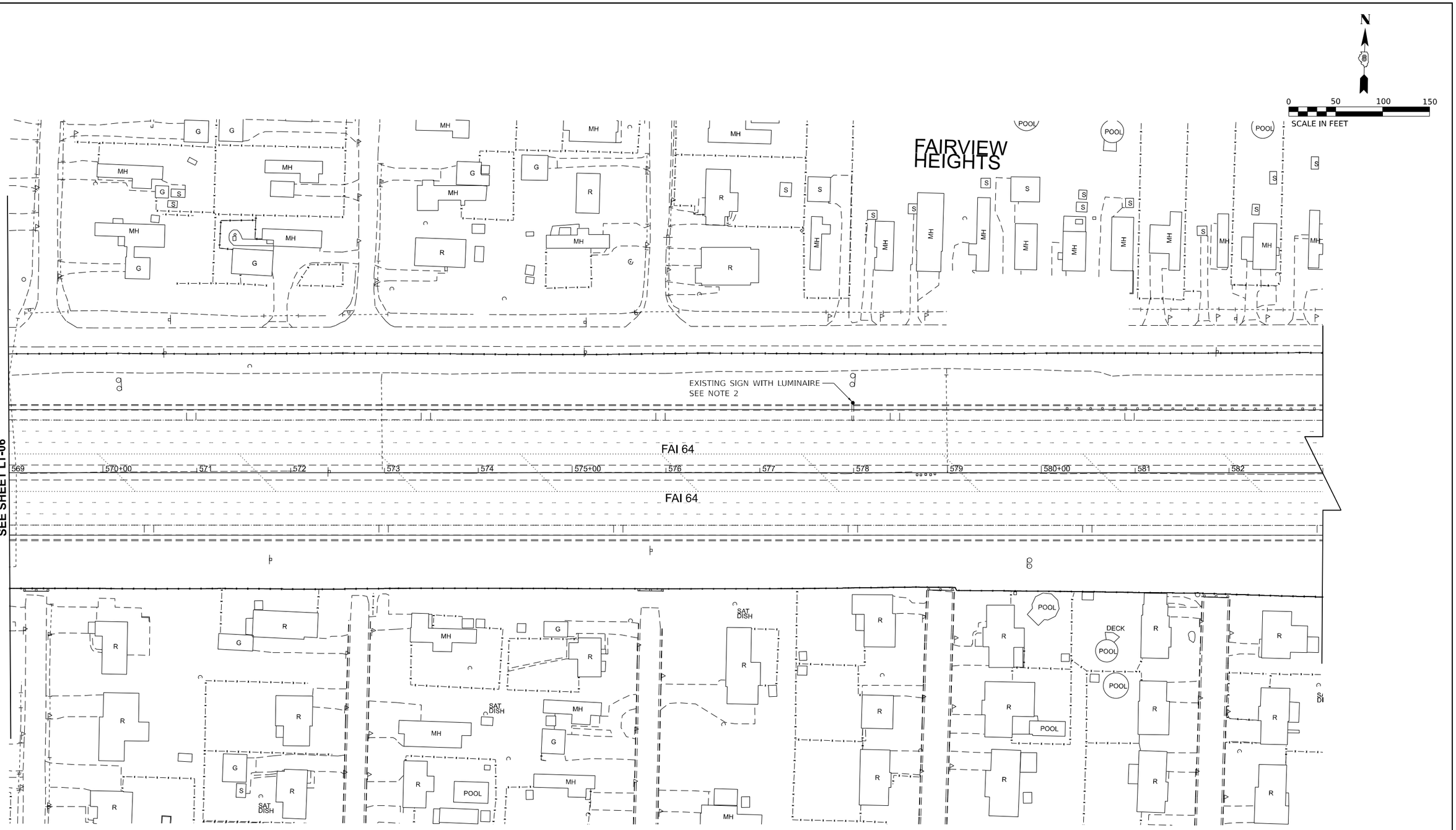

NOTES:

1. FOR GENERAL NOTES AND LEGENDS, SEE SHEET LTN-01.
2. ONE EXISTING SIGN LUMINAIRE AND ASSOCAITED EQUIPMENT SHALL BE REMOVED.

LT–07

AMES Engineering, Inc.
CONSULTING ENGINEERS
6330 Belmont Road, Suite 4B
Downers Grove, IL 60516

USER NAME = msomer	DESIGNED - MH	REVISED -	
	DRAWN - MD/SR	REVISED -	
PLOT SCALE = 0.16666633 ' / in.	CHECKED - BL	REVISED -	
PLOT DATE = 11/12/2024	DATE - 9-13-2024	REVISED -	

STATE OF ILLINOIS
DEPARTMENT OF TRANSPORTATION

REMOVAL AND TEMPORARY LIGHTING PLAN
IL 159 AND I–64

SCALE: 1"=50' | SHEET 7 OF 8 SHEETS | STA. 569+00 | TO STA. 583+00

F.A.I. RTE.	SECTION	COUNTY	TOTAL SHEETS	SHEET NO.
64	82-(4,5,6,7)-1RS-2	ST. CLAIR	388	296
		CONTRACT NO. 76R99		
	ILLINOIS FED. AID PROJECT			

MODEL: Plan 8 [Sheet]
FILE NAME: F:\Projects\1089 - VV PH I-I (206-043) - AMES\WO #4\Design\Shts\IL 159\D876899-Sheet II 159 EXISTING.dgn

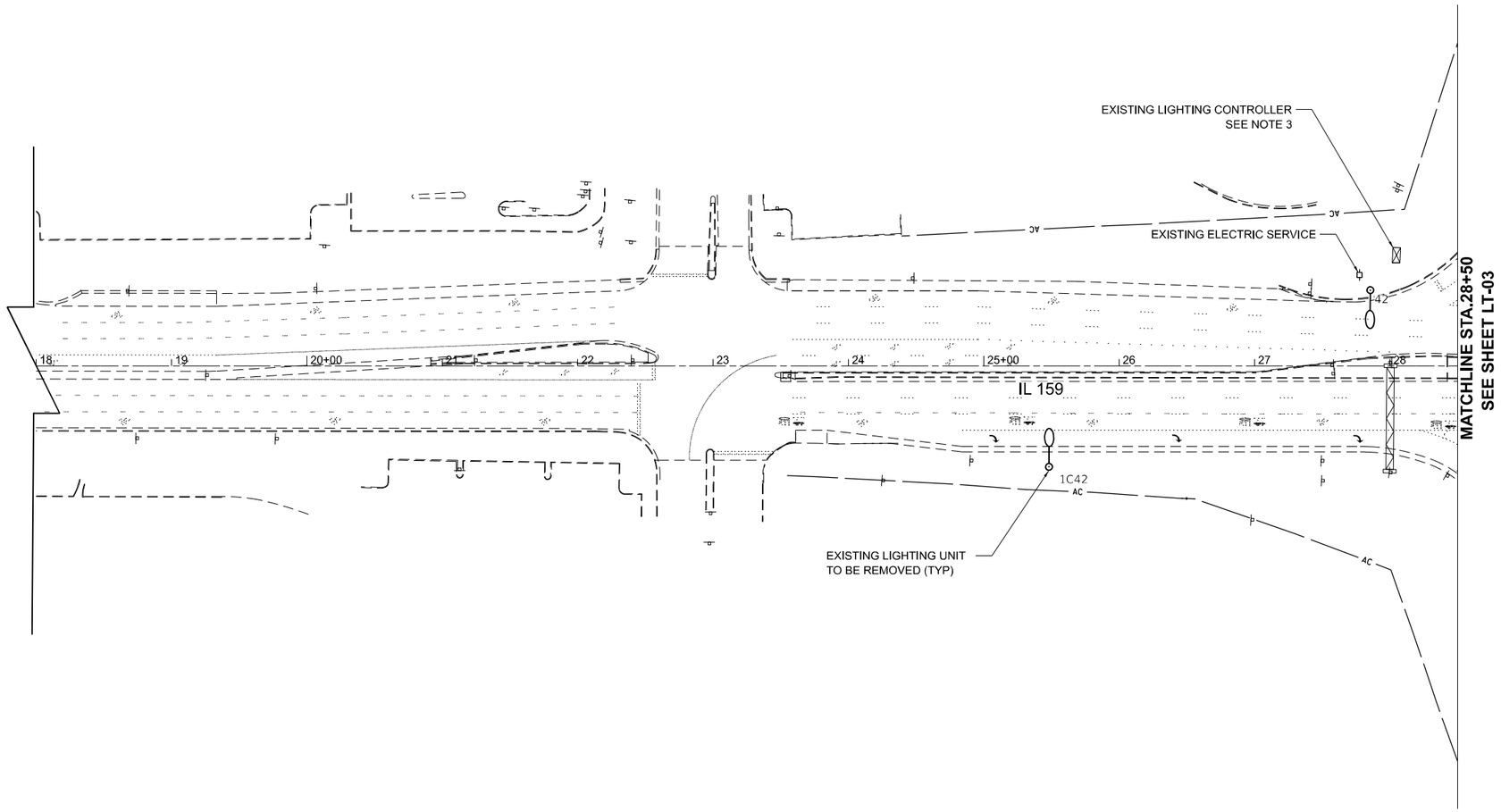

0 50 100 150
SCALE IN FEET

NOTES:

1. FOR GENERAL NOTES AND LEGENDS, SEE SHEET LTN-01.
2. THE EXISTING LIGHTING UNITS AS SHOWN ON THIS PLAN SHALL BE USED AS TEMPORARY LIGHTING UNTIL PROPOSED LIGHTING IS INSTALLED AND OPERATIONAL.
3. THE EXISTING LIGHTING CONTROLLER AND ELECTRIC SERVICE SHALL BE REMOVED WHEN THE PROPOSED LIGHTING CONTROLLERS ARE INSTALLED AND IS OPERATIONAL. THE EXISTING ELECTRIC SERVICE SHALL BE REPLACED WITH A NEW ELECTRIC SERVICE. THE CONTRACTOR SHALL COORDINATE THE WORK WITH THE ELECTRIC UTILITY COMPANY. THE EXISTING SERVICE CONDUIT WITH SERVICE CABLE SHALL BE ABANDONED IN PLACE AFTER DISCONNECTING FROM BOTH ENDS. SEE SHEETS LT-12 AND "LT-15" FOR PROPOSED LOCATIONS OF PROPOSED LIGHTING CONTROLLERS "LC-1" AND "LC-2".

LT–08

AMES Engineering, Inc.
CONSULTING ENGINEERS
6330 Belmont Road, Suite 4B
Downers Grove, IL 60516

USER NAME = msomer	DESIGNED - MH	REVISED -	
	DRAWN - MD/SR	REVISED -	
PLOT SCALE = 0.16666633 ' / In.	CHECKED - BL	REVISED -	
PLOT DATE = 11/12/2024	DATE - 9-13-2024	REVISED -	

STATE OF ILLINOIS
DEPARTMENT OF TRANSPORTATION

REMOVAL AND TEMPORARY LIGHTING PLAN
IL 159 AND I–64

SCALE: 1"=50' | SHEET 8 OF 8 SHEETS | STA. 18+00 | TO STA. 28+50

F.A.I. RTE.	SECTION	COUNTY	TOTAL SHEETS	SHEET NO.
64	82-(4,5,6,7)-1RS-2	ST. CLAIR	388	297
		CONTRACT NO. 76R99		
	ILLINOIS FED. AID PROJECT			

MODEL: Plan 7 [Sheet]
FILE NAME: F:\Projects\1089 - VV PH I-II (206-045) - AMES\WO #4\Design\Sht\IL 159\D876R99-sheet IL 159 EXISTING.dgn

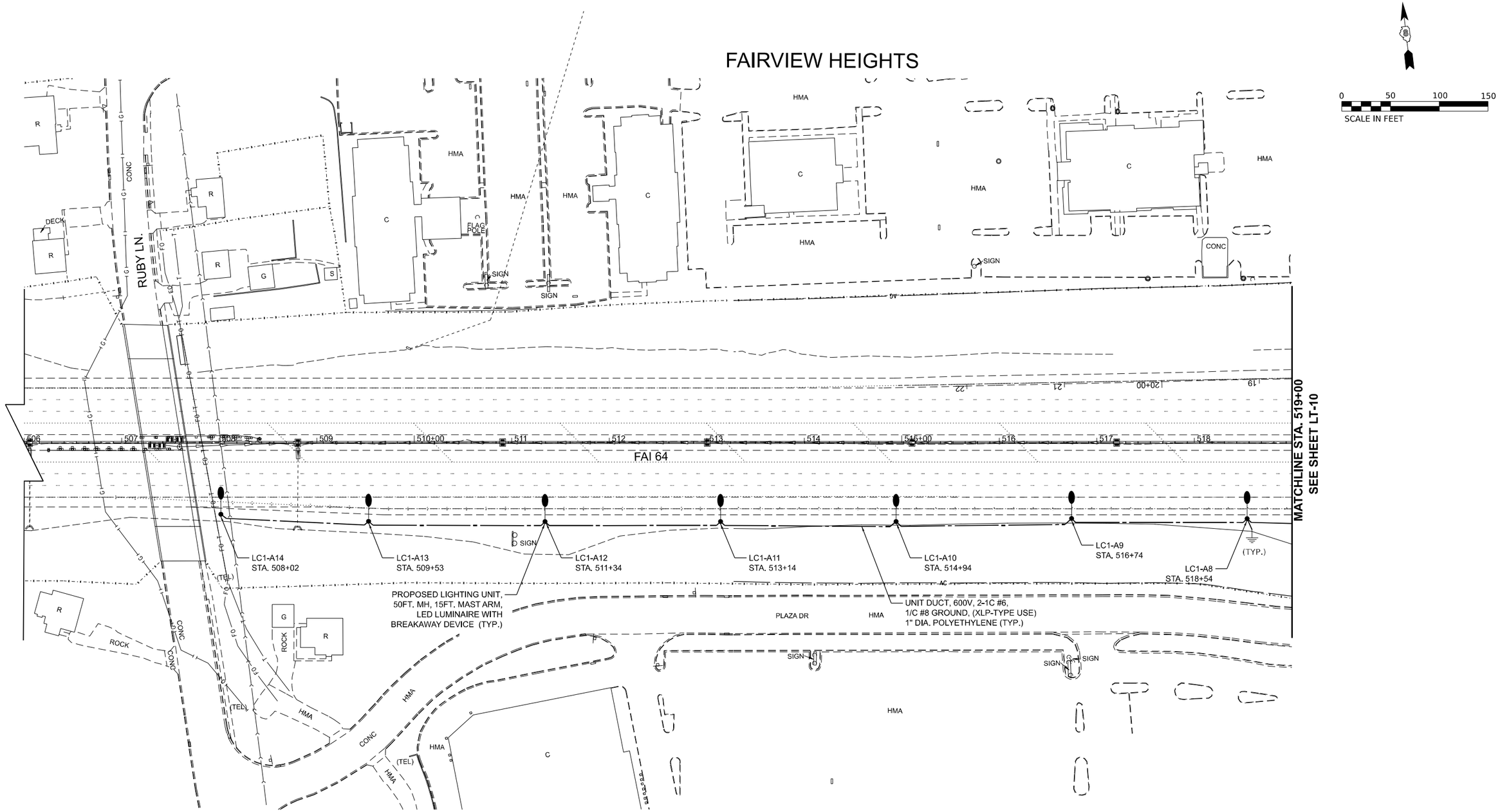

NOTES:

1. FOR GENERAL NOTES AND LEGEND, SEE SHEET LTN-01.
2. LIGHT POLE SET BACK IS 21 FT. FROM EDGE OF PAVEMENT TO CENTER OF LIGHT POLE, UNLESS OTHERWISE INDICATED.
3. LIGHTING UNITS SHALL BE INSTALLED TO AVOID DITCHES.

LT–09

MODEL: Plan 1 [Sheet]
FILE NAME: P:\Projects\1089 - VV PH I-II (206-045) - AMES\WO #4\Design\Sht\IL 159\WD876R99=sheet II 159 - Proposed.dgn

AMES Engineering, Inc.
CONSULTING ENGINEERS
6330 Belmont Road, Suite 4B
Downers Grove, IL 60516

USER NAME = msomer	DESIGNED - MH	REVISED -	
	DRAWN - SR	REVISED -	
PLOT SCALE = 0.16666633 ' / in.	CHECKED - BL	REVISED -	
PLOT DATE = 11/12/2024	DATE - 9-13-2024	REVISED -	

STATE OF ILLINOIS
DEPARTMENT OF TRANSPORTATION

PROPOSED LIGHTING PLAN
IL 159 AND I–64

SCALE: 1"=50' | SHEET 1 OF 7 SHEETS | STA. 506+00 TO STA. 519+00

F.A.I. RTE.	SECTION	COUNTY	TOTAL SHEETS	SHEET NO.
64	82-(4,5,6,7)-1RS-2	ST. CLAIR	388	298
		CONTRACT NO. 76R99		
	ILLINOIS FED. AID PROJECT			

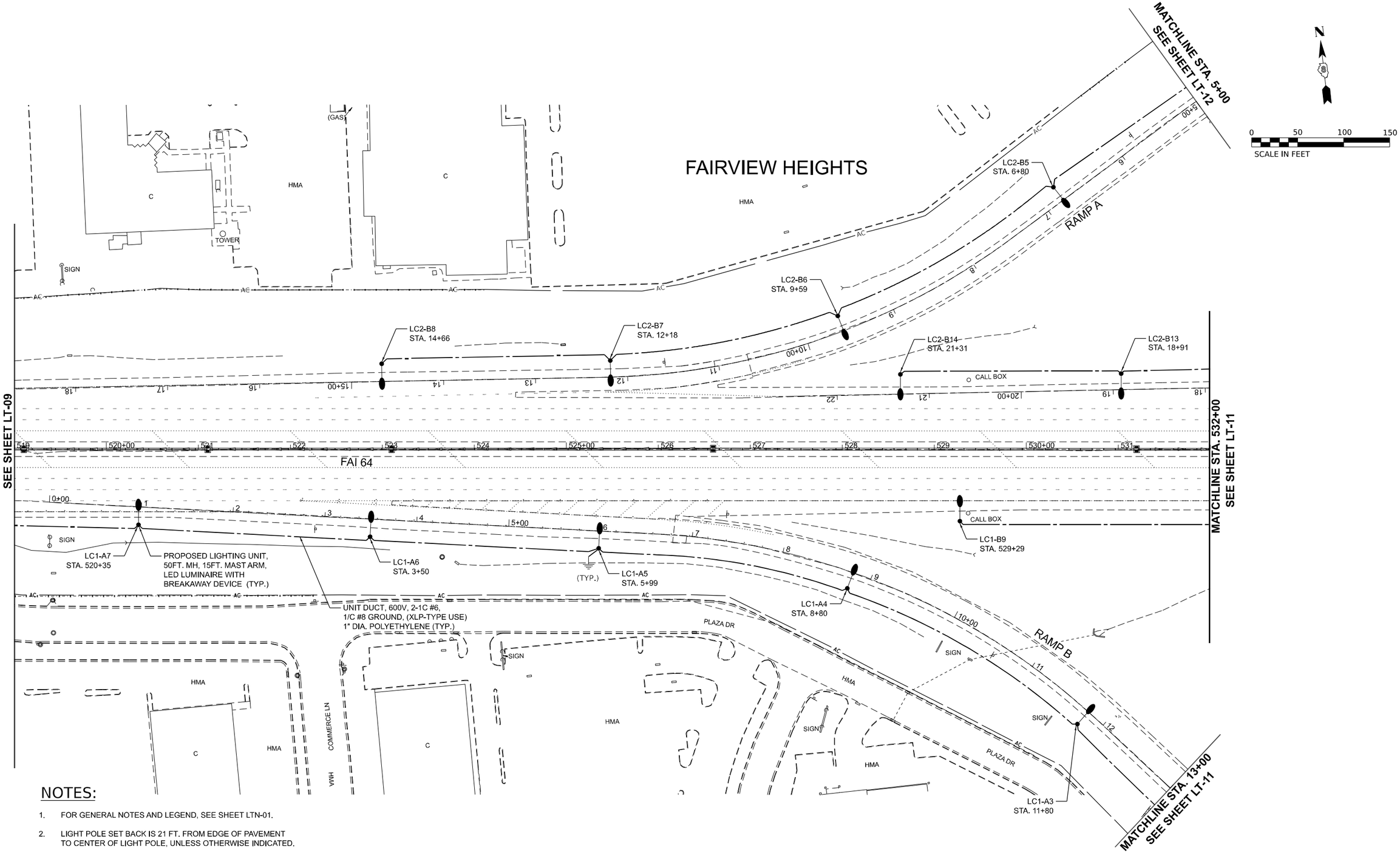

NOTES:

1. FOR GENERAL NOTES AND LEGEND, SEE SHEET LTN-01.
2. LIGHT POLE SET BACK IS 21 FT. FROM EDGE OF PAVEMENT TO CENTER OF LIGHT POLE, UNLESS OTHERWISE INDICATED.
3. LIGHTING UNITS SHALL BE INSTALLED TO AVOID DITCHES.

LT–10

MODEL: Plan 2 [Sheet]
FILE NAME: F:\Projects\1089 - VV PH I-II (20-045) - AMES\WO #4\Design\Sht\IL 159\D876f699-sheet ii 159 - Proposed.dgn

AMES Engineering, Inc.
CONSULTING ENGINEERS
6330 Belmont Road, Suite 4B
Downers Grove, IL 60516

USER NAME = msomer	DESIGNED - MH	REVISED -	
	DRAWN - SR	REVISED -	
PLOT SCALE = 0.16666633 ' / in.	CHECKED - BL	REVISED -	
PLOT DATE = 11/12/2024	DATE - 9-13-2024	REVISED -	

STATE OF ILLINOIS
DEPARTMENT OF TRANSPORTATION

PROPOSED LIGHTING PLAN
IL 159 AND I–64

SCALE: 1"=50' | SHEET 2 OF 7 SHEETS | STA. 519+00 | TO STA. 532+00

F.A.I. RTE.	SECTION	COUNTY	TOTAL SHEETS	SHEET NO.
64	82-(4,5,6,7)-1RS-2	ST. CLAIR	388	299
		CONTRACT NO. 76R99		
	ILLINOIS	FED. AID PROJECT		

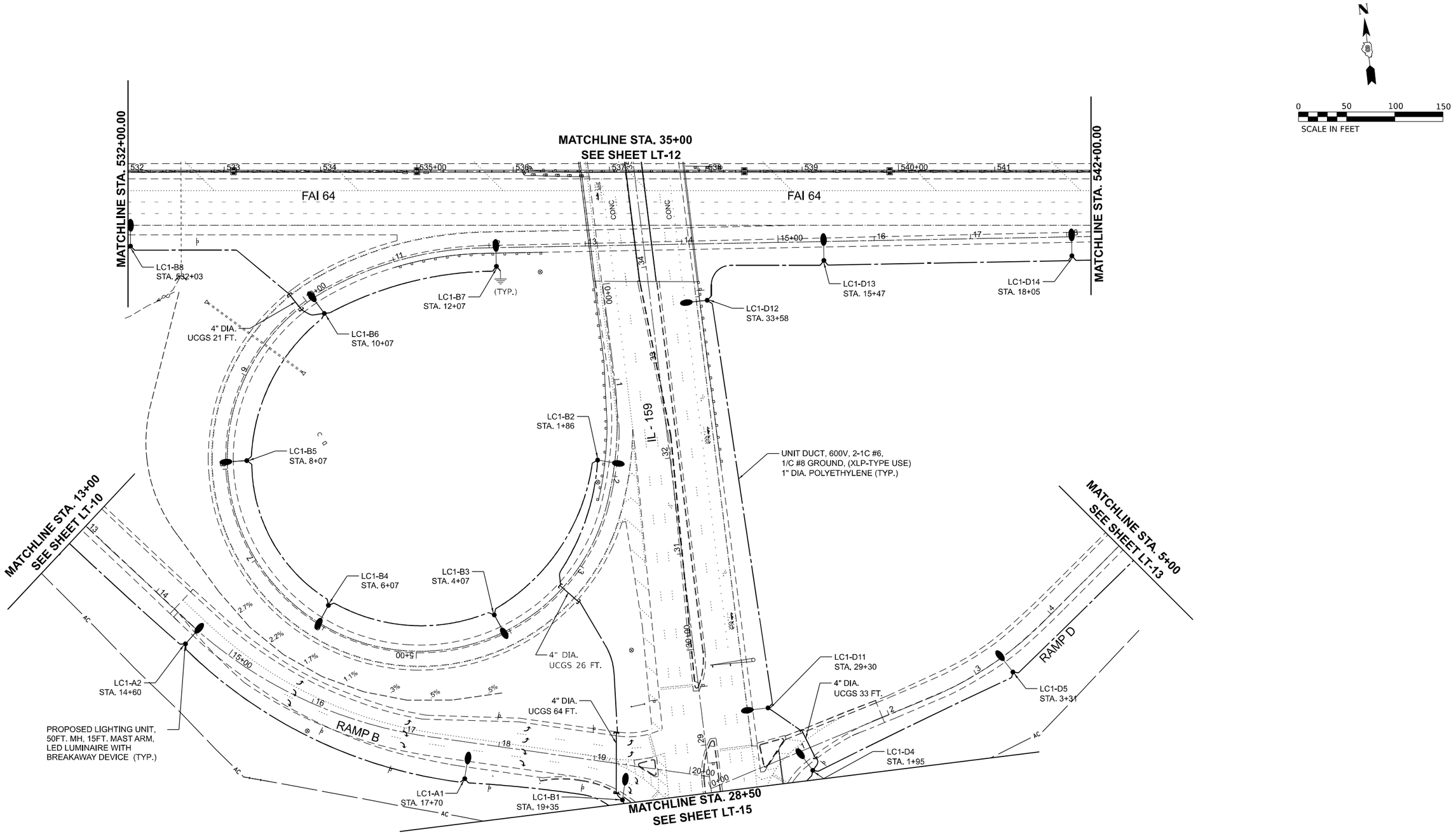

NOTES:

1. FOR GENERAL NOTES AND LEGEND, SEE SHEET LTN-01.
2. LIGHT POLE SET BACK IS 21 FT. FROM EDGE OF PAVEMENT TO CENTER OF LIGHT POLE, UNLESS OTHERWISE INDICATED.
3. LIGHTING UNITS SHALL BE INSTALLED TO AVOID DITCHES.
4. UCGS STANDS FOR UNDERGROUND CONDUIT, GALVANIZED STEEL.

LT–11

MODEL: Plan 3 [Sheet]
FILE NAME: F:\Projects\1089 - VV PH I-II (206-045) - AMES\WO #4\Design\Sht\IL 159\D876R99-sheet il 159 - Proposed.dgn

AMES Engineering, Inc. CONSULTING ENGINEERS 6330 Belmont Road, Suite 4B Downers Grove, IL 60516	USER NAME = msomer	DESIGNED - MH	REVISED -	STATE OF ILLINOIS DEPARTMENT OF TRANSPORTATION	PROPOSED LIGHTING PLAN IL 159 AND I–64
		DRAWN - SR	REVISED -		
	PLOT SCALE = 0.16666633 ' / in.	CHECKED - BL	REVISED -		
	PLOT DATE = 11/12/2024	DATE - 9-13-2024	REVISED -		SCALE: 1"=50' SHEET 3 OF 9 SHEETS STA. 532+00 TO STA. 542+00

F.A.I. RTE.	SECTION	COUNTY	TOTAL SHEETS	SHEET NO.
64	82-(4,5,6,7)-1RS-2	ST. CLAIR	388	300
		CONTRACT NO. 76R99		
		ILLINOIS	FED. AID PROJECT	

NOTES:

1. FOR GENERAL NOTES AND LEGEND, SEE SHEET LTN-01.
2. LIGHT POLE SET BACK IS 21 FT. FROM EDGE OF PAVEMENT TO CENTER OF LIGHT POLE, UNLESS OTHERWISE INDICATED.
3. LIGHTING UNITS SHALL BE INSTALLED TO AVOID DITCHES.
4. UCGS STANDS FOR UNDERGROUND CONDUIT, GALVANIZED STEEL.

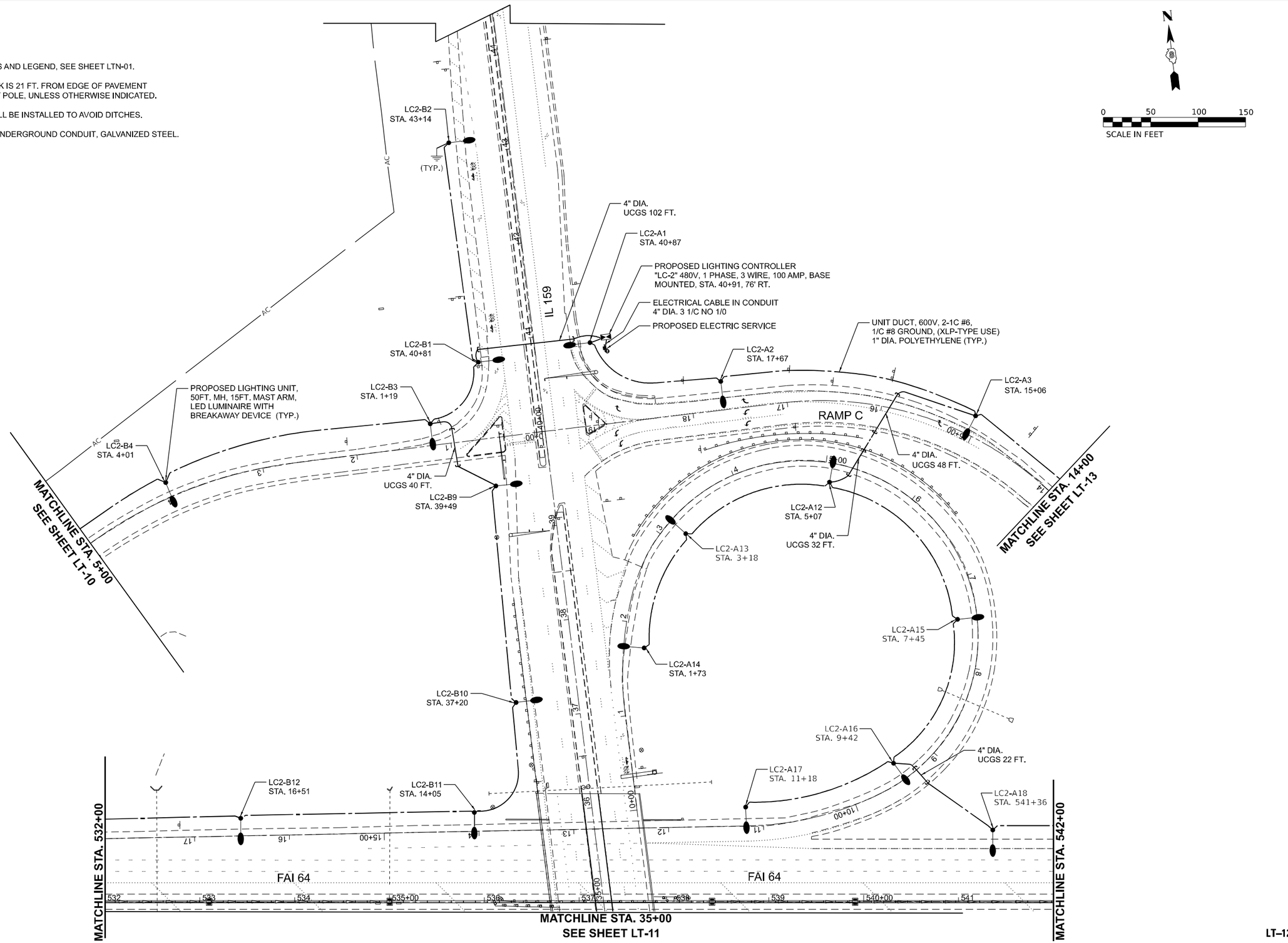

LT–12

AMES Engineering, Inc. CONSULTING ENGINEERS 6330 Belmont Road, Suite 4B Downers Grove, IL 60516	USER NAME = msomer	DESIGNED - MH	REVISED -	STATE OF ILLINOIS DEPARTMENT OF TRANSPORTATION	PROPOSED LIGHTING PLAN IL 159 AND I–64
		DRAWN - SR	REVISED -		
	PLOT SCALE = 0.16666633 ' / in.	CHECKED - BL	REVISED -		
	PLOT DATE = 11/12/2024	DATE - 9-13-2024	REVISED -		SCALE: 1"=50' SHEET 4 OF 7 SHEETS STA. 532+00 TO STA. 542+00

F.A.I. RTE.	SECTION	COUNTY	TOTAL SHEETS	SHEET NO.
64	82-(4,5,6,7)-1RS-2	ST. CLAIR	388	301
		CONTRACT NO. 76R99		
	ILLINOIS FED. AID PROJECT			

MODEL: Plan 4 [Sheet]
FILE NAME: F:\Projects\1089 - VV PH I-II (205-0451 - AMES WO #4\Design\Sht\IL 159\D876R99-sheet II 159 - Proposed.dgn

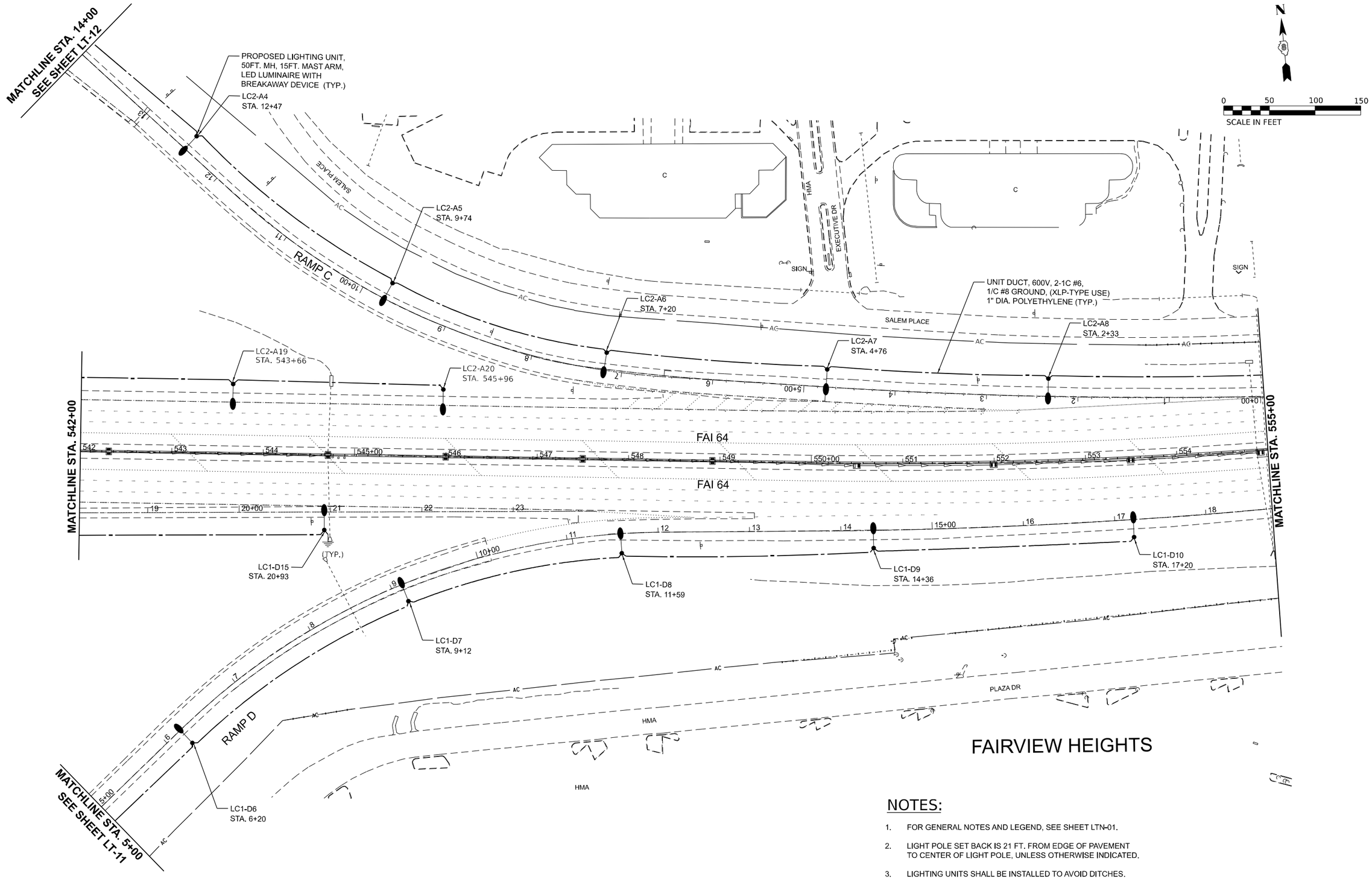

NOTES:

1. FOR GENERAL NOTES AND LEGEND, SEE SHEET LTN-01.
2. LIGHT POLE SET BACK IS 21 FT. FROM EDGE OF PAVEMENT TO CENTER OF LIGHT POLE, UNLESS OTHERWISE INDICATED.
3. LIGHTING UNITS SHALL BE INSTALLED TO AVOID DITCHES.

LT–13

MODEL: Plan 5 [Sheet]
FILE NAME: P:\Projects\1089 - VV PH I-II (206-045) - AMES\WO #4\Design\Sht\IL 159\D876R99>sheet ll 159 - Proposed.dgn

AMES Engineering, Inc.
CONSULTING ENGINEERS
6330 Belmont Road, Suite 4B
Downers Grove, IL 60516

USER NAME = msomer	DESIGNED - MH	REVISED -	
	DRAWN - SR	REVISED -	
PLOT SCALE = 0.16666633 ' / In.	CHECKED - BL	REVISED -	
PLOT DATE = 11/12/2024	DATE - 9-13-2024	REVISED -	

STATE OF ILLINOIS
DEPARTMENT OF TRANSPORTATION

PROPOSED LIGHTING PLAN
IL 159 AND I–64

SCALE: 1"=50' | SHEET 5 OF 7 SHEETS | STA. 542+00 | TO STA. 555+00

F.A.I. RTE.	SECTION	COUNTY	TOTAL SHEETS	SHEET NO.
64	82-(4,5,6,7)-1RS-2	ST. CLAIR	388	302
		CONTRACT NO. 76R99		
	ILLINOIS	FED. AID PROJECT		

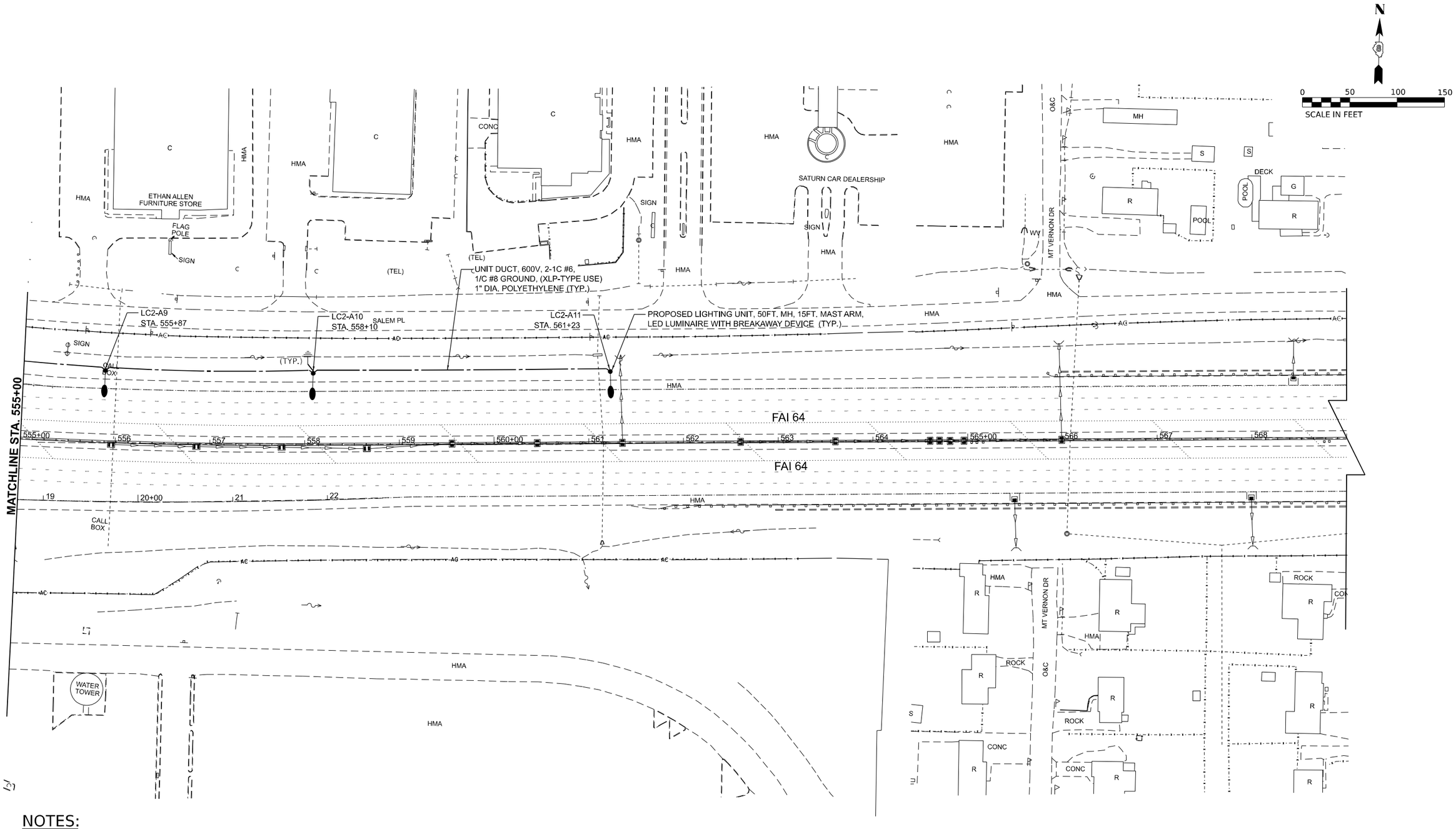

NOTES:

1. FOR GENERAL NOTES AND LEGEND, SEE SHEET LTN-01.
2. LIGHT POLE SET BACK IS 21 FT. FROM EDGE OF PAVEMENT TO CENTER OF LIGHT POLE, UNLESS OTHERWISE INDICATED.
3. LIGHTING UNITS SHALL BE INSTALLED TO AVOID DITCHES.

LT–14

MODEL: Plan 6 [Sheet]
FILE NAME: F:\Projects\1089 - VV PH I-II (206-045) - AMES\WO #4\Design\Sht\IL 159\D876R99-sheet il 159 - Proposed.dgn

AMES Engineering, Inc. CONSULTING ENGINEERS 6330 Belmont Road, Suite 4B Downers Grove, IL 60516	USER NAME = msomer	DESIGNED - MH	REVISED -	STATE OF ILLINOIS DEPARTMENT OF TRANSPORTATION	PROPOSED LIGHTING PLAN IL 159 AND I–64
		DRAWN - SR	REVISED -		
	PLOT SCALE = 0.16666633 ' / in.	CHECKED - BL	REVISED -		
	PLOT DATE = 11/12/2024	DATE - 9-13-2024	REVISED -		SCALE: 1"=50' SHEET 6 OF 7 SHEETS STA. 555+00 TO STA. 569+00

F.A.I. RTE.	SECTION	COUNTY	TOTAL SHEETS	SHEET NO.
64	82-(4,5,6,7)-1RS-2	ST. CLAIR	388	303
		CONTRACT NO. 76R99		
		ILLINOIS FED. AID PROJECT		

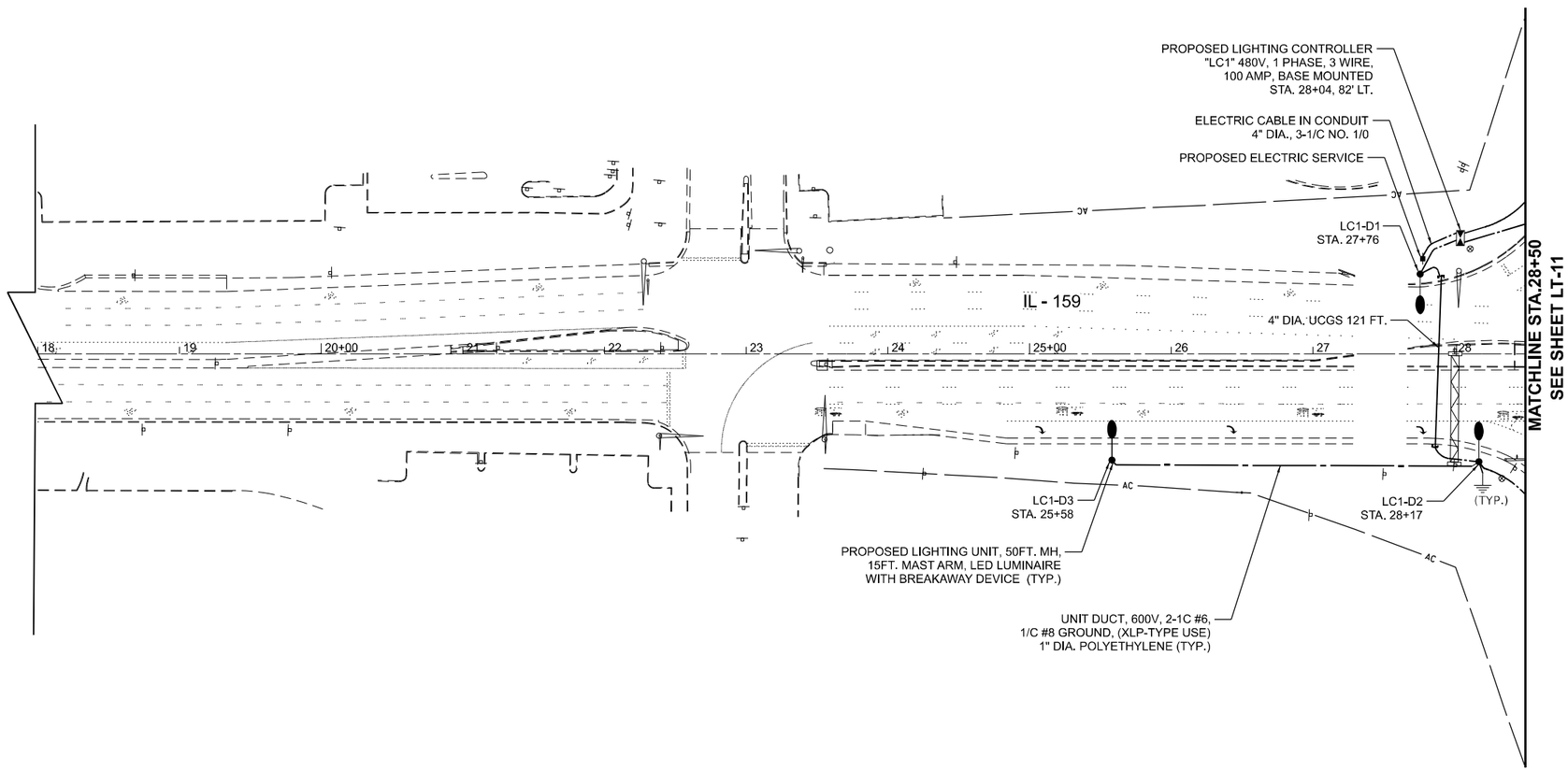

0 50 100 150
SCALE IN FEET

NOTES:

1. FOR GENERAL NOTES AND LEGEND, SEE SHEET LTN-01.
2. LIGHT POLE SET BACK IS 21 FT. FROM EDGE OF PAVEMENT TO CENTER OF LIGHT POLE, UNLESS OTHERWISE INDICATED.
3. LIGHTING UNITS SHALL BE INSTALLED TO AVOID DITCHES.
4. UCGS STANDS FOR UNDERGROUND CONDUIT, GALVANIZED STEEL.

LT–15

MODEL: Plan 7 [Sheet]
FILE NAME: F:\Projects\1089 - VV PH I-II (206-0451 - AMES\WO #4\Design\Sht\IL 159\D876R99-sheet II 159 - Proposed.dgn

AMES Engineering, Inc.
CONSULTING ENGINEERS
6330 Belmont Road, Suite 4B
Downers Grove, IL 60516

USER NAME = msomer	DESIGNED - MH	REVISED -	
	DRAWN - SR	REVISED -	
PLOT SCALE = 0.16666633 ' / In.	CHECKED - BL	REVISED -	
PLOT DATE = 11/12/2024	DATE - 9-13-2024	REVISED -	

STATE OF ILLINOIS
DEPARTMENT OF TRANSPORTATION

PROPOSED LIGHTING PLAN
IL 159 AND I–64

SCALE: 1"=50' | SHEET 7 OF 7 SHEETS | STA. 18+00 | TO STA. 28+50

F.A.I. RTE.	SECTION	COUNTY	TOTAL SHEETS	SHEET NO.
64	82-(4,5,6,7)-1RS-2	ST. CLAIR	388	304
		CONTRACT NO. 76R99		
	ILLINOIS	FED. AID PROJECT		

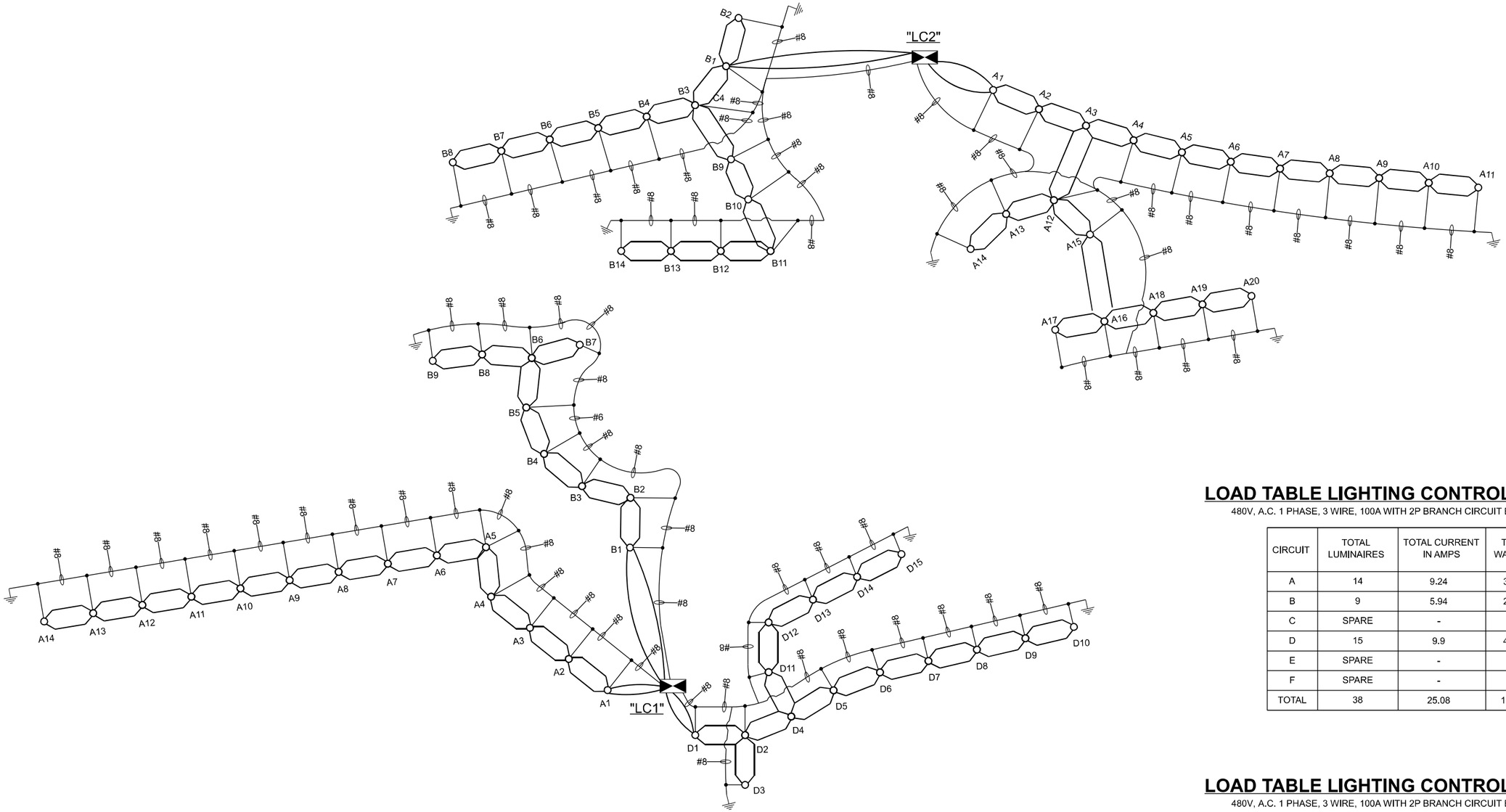

LOAD TABLE LIGHTING CONTROLLER "LC1"

480V, A.C. 1 PHASE, 3 WIRE, 100A WITH 2P BRANCH CIRCUIT BREAKERS

CIRCUIT	TOTAL LUMINAIRES	TOTAL CURRENT IN AMPS	TOTAL WATTAGE
A	14	9.24	3,948
B	9	5.94	2,538
C	SPARE	-	-
D	15	9.9	4,230
E	SPARE	-	-
F	SPARE	-	-
TOTAL	38	25.08	10,716

LOAD TABLE LIGHTING CONTROLLER "LC2"

480V, A.C. 1 PHASE, 3 WIRE, 100A WITH 2P BRANCH CIRCUIT BREAKERS

CIRCUIT	TOTAL LUMINAIRES	TOTAL CURRENT IN AMPS	TOTAL WATTAGE
A	20	13.2	5,640
B	14	9.24	3,948
C	SPARE	-	-
D	SPARE	-	-
E	SPARE	-	-
F	SPARE	-	-
TOTAL	34	22.44	9,588

LEGEND

- PROPOSED LIGHTING CONTROLLER "LC1" 480V, 1 PHASE, 3 WIRE 100 AMP, WITH 20A 2P BRANCH CIRCUIT BREAKERS, BASE MOUNTED
- UNIT DUCT, 600V, 1C NO.6
- PROPOSED LIGHTING UNIT WITH LUMINAIRES OUTPUT DESIGNATION H
- GROUND ROD (AT EACH POLE PER STANDARDS)

MODEL: LC1 (Sheet)
FILE NAME: F:\Projects\1089 - VV PH I-II (206-045) - AMES\WO #4\Design\Sht\IL 159\0876R99-Sheet Wiring Diagram IL 159 & I-64.dgn

AMES Engineering, Inc.
CONSULTING ENGINEERS
6330 Belmont Road, Suite 4B
Downers Grove, IL 60516

USER NAME = msomer	DESIGNED - MH	REVISED -	
	DRAWN - SR	REVISED -	
PLOT SCALE = 0.16666633 ' / in.	CHECKED - BL	REVISED -	
PLOT DATE = 11/12/2024	DATE - 9-13-2024	REVISED -	

STATE OF ILLINOIS
DEPARTMENT OF TRANSPORTATION

WIRING DIAGRAM
IL 159 AND I–64

SCALE: NONE | SHEET 1 OF 1 SHEETS | STA. | TO STA.

F.A.I. RTE.	SECTION	COUNTY	TOTAL SHEETS	SHEET NO.
64	82-(4,5,6,7)-1RS-2	ST. CLAIR	388	305
		CONTRACT NO. 76R99		
	ILLINOIS	FED. AID PROJECT		

Illinois Department of Transportation

Luminaire Performance Table

Project

Date	Contract Number	Section Number	County
10/25/23	76R99	82-(4,5,6,7)-1R-2	St. Clair

Marked Route Number	Municipality
I-64	FAIRVIEW HEIGHTS

Roadway

Lane Width	# of Lanes	Median Width	I.E.S. Surface Classification	Q-Zero Value
12 FT	4	N/A	R3	0.07

Structure

Mounting Height	Arm Length	Set-Back	Number of Luminaires (Highmast & Sign Lighting Only)
50 FT	15 FT	20 FT	

Luminaire

Description	I.E.S. Lateral Distribution	I.E.S. Vertical Distribution
ROADWAY, OUTPUT DESIGNATION H	TYPE II OR TYPE III	MEDIUM

Total Light Loss Factor (LLF)	B-U-G Rating	Shields	Dimming Protocol
0.7	U=0	N/A	N/A

Layout

Spacing (to Nearest 5 ft)	Configuration (Opposite, Staggered, 1 Sided, or Median)
275 FT	1 SIDED

Performance

Average Illuminance, E_{AVE} (fc)	Uniformity Ratio, E_{AVE}/E_{MIN}
0.9	3

Average Luminance, L_{AVE} (cd/m^2)	Uniformity Ratio, L_{AVE}/L_{MIN}	Uniformity Ratio, L_{MAX}/L_{MIN}	Veiling Luminance Ratio, L_V/L_{AVE}
0.6	3.5	6.0:1	0.3:1

Light Tresspass

Distance to ROW (behind pole)	Max. Horizontal Illuminance at ROW, E_H	Max. Vertical Illuminance at ROW, E_V
N/A	N/A	N/A

Notes

1. Set-Back is from Edge of Pavement (white line) except for sign luminaires when it is vertical and horizontal distance from the sign to the luminaire.
2. Lighting calculations shall be performed with all luminaires oriented toward and perpendicular to the roadway.
3. Total Light Loss Factor (LLF) = the product of "Lumen Maintenance" (LLD) = 0.9, "Dirt Depreciation" (LDD) = 0.8, and "Equipment Factors" (EF) = 0.95.
4. Performance requirements shall be the minimum acceptable standards of photometric performance for the luminaire, based on the given conditions listed above.

Compliance with performance criteria shall be held to one significant digit.

Initial lumens of the proposed luminaire may vary from the values specifies in the table given in Article 1067.06 of the BDE Special Provision for Luminaires, LED

Printed 10/25/23

BDE 5630 (04/10/19)

LT–17

MODEL: Default
FILE NAME: F:\Projects\1089 - VV PH I-II (206-045) - AMES\WO #4\Design\Sht\IL 159\D876R99-sheet II 159 - Lum table.dgn

AMES Engineering, Inc. CONSULTING ENGINEERS 6330 Belmont Road, Suite 4B Downers Grove, IL 60516	USER NAME = msomer	DESIGNED - MH	REVISED -	STATE OF ILLINOIS DEPARTMENT OF TRANSPORTATION	LUMINAIRE PERFORMANCE TABLE IL 159 AND I–64
		DRAWN - MD	REVISED -		
	PLOT SCALE = 0.100 ' / in.	CHECKED - BL	REVISED -		
	PLOT DATE = 11/12/2024	DATE - 9-13-2024	REVISED -		SCALE: NONE SHEET 1 OF 1 SHEETS STA. TO STA.

F.A.I. RTE.	SECTION	COUNTY	TOTAL SHEETS	SHEET NO.
64	82-(4,5,6,7)-1RS-2	ST. CLAIR	388	306
		CONTRACT NO. 76R99		
		ILLINOIS FED. AID PROJECT		

GENERAL NOTES:

1. THIS PROJECT INCLUDES THE INSTALLATION OF A NEW LIGHTING SYSTEM TO REPLACE THE EXISTING LIGHTING ALONG THE INTERCHANGE OF I-64 AND WEST HIGHWAY 50. THE PROPOSED LIGHTING SHALL BE OWNED AND MAINTAINED BY THE STATE OF ILLINOIS.
2. THE CONTRACTOR SHALL CONTACT THE ELECTRIC UTILITY COMPANY TO COORDINATE THE ELECTRIC SERVICE WORK.
3. THE QUANTITIES OF RACEWAY WHERE INDICATED ON THESE PLANS ARE APPROXIMATIONS ONLY. THE CONTRACTOR SHALL FIELD VERIFY ALL LENGTHS AND SHALL INSTALL RACEWAYS IN COMPLETE COMPLIANCE WITH THE SPECIFIED REQUIREMENTS.
4. THE CONTRACTOR SHALL NOTIFY J.U.L.I.E. TO LOCATE AND MARK/STAKE ALL UNDERGROUND UTILITIES.
5. THE DEPT. IS NOT A MEMBER OF J.U.L.I.E. AND DOES NOT LOCATE ITS OWN FACILITIES. THE APPLICANT AT THEIR OWN EXPENSE SHALL OBTAIN THE SERVICES OF A QUALIFIED ELECTRICAL CONTRACTOR TO LOCATE STATE-OWNED FACILITIES.
6. THE CONTRACTOR SHALL VERIFY LOCATIONS OF UNDERGROUND/OVERHEAD UTILITIES PRIOR TO INSTALLATION OF LIGHT POLES AND CONDUITS. IF THERE IS A CONFLICT WITH THE LIGHT POLES/CONDUITS AS SHOWN ON PLANS, THE CONTRACTOR SHALL SUGGEST ALTERNATIVE LOCATIONS AND COORDINATE WITH THE ENGINEER PRIOR TO PERFORMING ANY CONSTRUCTION WORK.
7. TRENCHES FOR LIGHTING RACEWAYS SHALL HAVE A MINIMUM DEPTH OF 30".
8. LIGHTING SYSTEM INSTALLATION SHALL CONFORM TO THE LATEST IDOT STANDARDS, NEC AND LOCAL CODES.
9. ALL ELECTRICAL EQUIPMENT AND PRODUCTS SHALL BE UL LISTED AND LABELED.
10. THE CONTRACTOR SHALL COORDINATE WITH EXISTING CONDITIONS WHEN INSTALLING UNIT DUCT TO AVOID CONFLICTS WITH EXISTING UNDERGROUND UTILITIES AND TREES ROOTS. THE CONTRACTOR SHALL BE RESPONSIBLE FOR ANY DAMAGE AS DETERMINED BY THE ENGINEER.
11. THE CONTRACTOR SHALL COORDINATE WITH EXISTING CONDITIONS WHEN INSTALLING LIGHT POLE FOUNDATIONS TO AVOID CONFLICTS WITH UNDERGROUND UTILITIES AND EXISTING DITCH FLOWLINE. WHEN CONFLICTS ARE ENCOUNTERED, THE CONTRACTOR SHALL REQUEST TO RELOCATE THE FOUNDATION. THE NEW LOCATION SHALL BE APPROVED BY THE ENGINEER PRIOR TO INSTALLATION.
12. GROUND RODS SHALL BE INSTALLED AT EACH LIGHTING UNIT.
13. EXISTING UNIT DUCT AND CONDUIT SHALL BE ABANDONED IN PLACE AFTER DISCONNECTING FROM THE POWER SOURCE.
14. EXISTING CABLE IN CONDUIT SHALL BE REMOVED FROM CONDUIT AND BECOME THE PROPERTY OF THE CONTRACTOR.

CALL-OUT DESCRIPTION

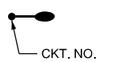

CIRCUIT NUMBER EXAMPLE

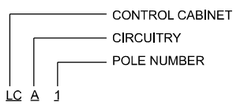

LIST OF STATE STANDARDS

805001-01	ELECTRICAL SERVICE INSTALLATION DETAILS
821101-02	LUMINAIRE WIRING IN POLE
825026-04	LIGHTING CONTRTOLLER BASE MOUNT 480V
830001-03	LIGHT POLE ALUMINUM MAST ARM
836001-04	LIGHT POLE FOUNDATION
838001-01	BREAKAWAY DEVICES

BILL OF MATERIALS

DESCRIPTION	UNIT	QUANTITY
ELECTRIC SERVICE INSTALLATION	EACH	2
UNDERGROUND CONDUIT, GALVANIZED STEEL, 4" DIA.	FOOT	484
UNIT DUCT, 600V, 2-1C NO.6, 1/C NO.8 GROUND, (XLP-TYPE USE), 1" DIA. POLYETHYLENE	FOOT	17,568
ELECTRIC CABLE IN CONDUIT, 600V (XLP-TYPE USE) 1/C NO. 1/0	FOOT	714
LUMINAIRE, LED, ROADWAY, OUTPUT DESIGNATION H	EACH	68
LIGHTING CONTROLLER, BASE MOUNTED, 480VOLT, 100AMP	EACH	2
LIGHT POLE, ALUMINUM, 50 FT. M.H., 15 FT. MAST ARM	EACH	68
LIGHT POLE FOUNDATION, 30" DIAMETER	FOOT	476
BREAKAWAY DEVICE, TRANSFORMER BASE, 15 INCH BOLT CIRCLE	EACH	68
REMOVAL OF LIGHTING UNIT, NO SALVAGE	EACH	62
REMOVAL OF POLE FOUNDATION	EACH	62
REMOVAL OF LIGHTING CONTROLLER	EACH	2
REMOVAL OF ELECTRIC SERVICE INSTALLATION	EACH	2
REMOVAL OF LIGHTING CONTROLLER FOUNDATION	EACH	2
REMOVE OF EXISTING SIGN LIGHTING UNIT WITH NO SALVAGE	EACH	2
REMOVE CABLE FROM CONDUIT	FOOT	520

LEGEND

- EXISTING LIGHTING UNIT TO BE REMOVED.
- PROPOSED LIGHTING UNIT, 50 FT. MH, 15 FT. MAST ARM, UNLESS OTHERWISE INDICATED, (480V - PHASE TO PHASE) LED LUMINAIRE, OUTPUT DESIGNATION H WITH BREAKAWAY DEVICE AND 17" BOLT CIRCLE FOUNDATION
- UNIT DUCT, 600V, 2-1C #6, 1/C #8 GROUND, (XLP-TYPE USE) 1" DIA. POLYETHYLENE
- ELECTRIC SERVICE 240/480V, 1 PHASE, 3 WIRE
- PROPOSED LIGHTING CONTROLLER 480V, 1 PHASE, 3 WIRE 100 AMP, BASE MOUNTED
- EXISTING LIGHTING CONTROLLER
- UNDERGROUND CONDUIT GALVANIZED STEEL
- ELECTRIC CABLE IN CONDUIT 4" DIA., 3-1/C NO. 1/0
- GROUND ROD 5/8" X 10 FT.

LTN-01

AMES Engineering, Inc.
CONSULTING ENGINEERS
6330 Belmont Road, Suite 4B
Downers Grove, IL 60516

USER NAME = msomer	DESIGNED - MH	REVISED -
	DRAWN - MD/SR	REVISED -
PLOT SCALE = 0.16666633 ' / in.	CHECKED - BL	REVISED -
PLOT DATE = 11/12/2024	DATE - 9-13-2024	REVISED -

STATE OF ILLINOIS
DEPARTMENT OF TRANSPORTATION

LIGHTING GENERAL NOTES, BILL OF MATERIALS AND LEGEND
WEST HIGHWAY 50 & I-64

SCALE: NONE | SHEET 1 OF 1 SHEETS | STA. | TO STA.

F.A.I. RTE.	SECTION	COUNTY	TOTAL SHEETS	SHEET NO.
64	82-(4,5,6,7)-1RS-2	ST. CLAIR	388	307
		CONTRACT NO. 76R99		
	ILLINOIS	FED. AID PROJECT		

MODEL: GEN 50 [Sheet]
FILE NAME: F:\Projects\1089 - VV PH I-II (206-0451) - AMES\WO #4\Design\Smt\HWY 50\D8769B\Sheet W Highway 50 & I-64- General Notes.dgn

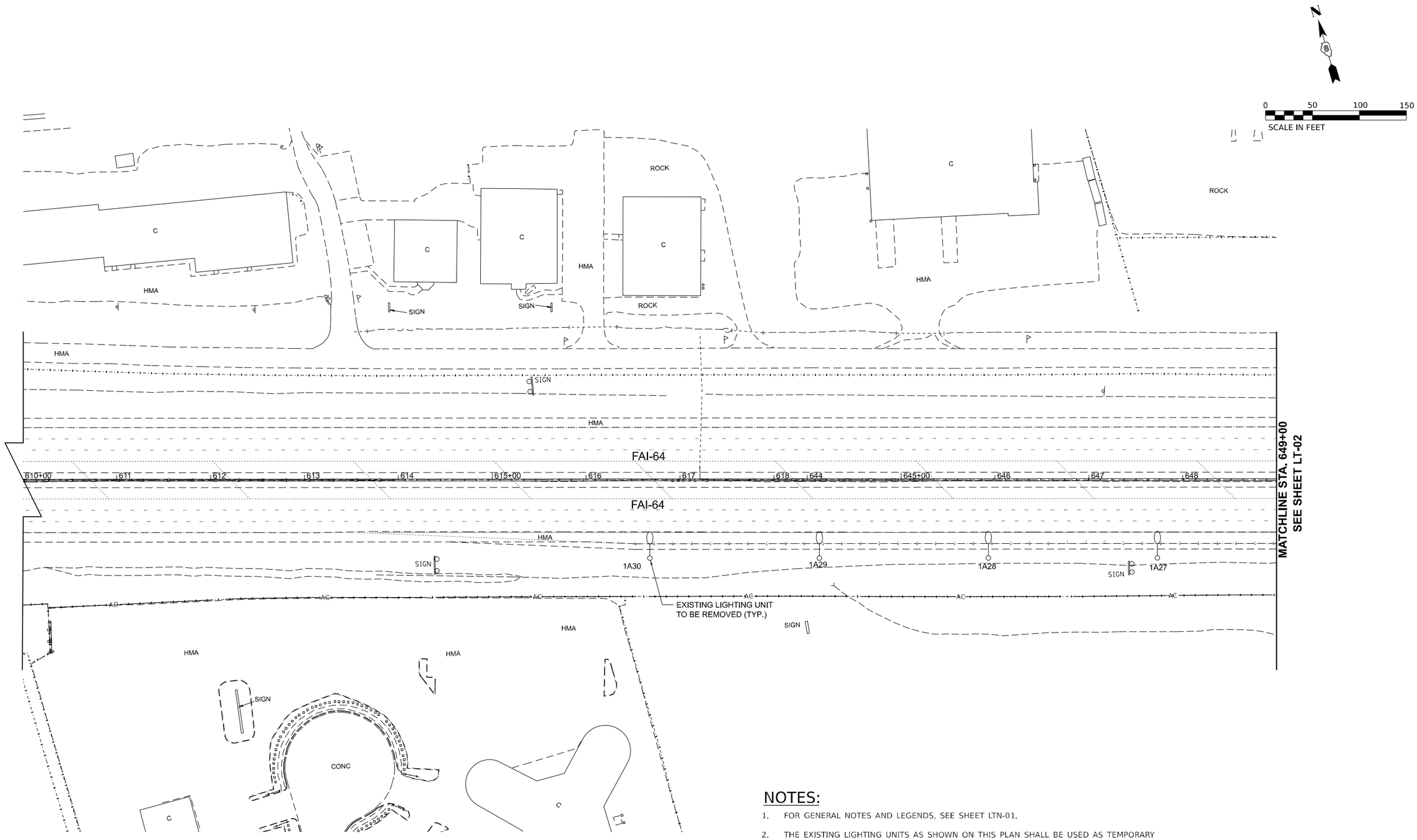

NOTES:

1. FOR GENERAL NOTES AND LEGENDS, SEE SHEET LTN-01.
2. THE EXISTING LIGHTING UNITS AS SHOWN ON THIS PLAN SHALL BE USED AS TEMPORARY LIGHTING UNTIL PROPOSED LIGHTING IS INSTALLED AND OPERATIONAL.

LT–01

MODEL: PLAN 1
FILE NAME: F:\Projects\1089 - VV PH I-II (206-045) - AMES\WO #4\Design\Sht\HWY 50\D876899-sheet HIGWAY 50 EXISTING.dgn

AMES Engineering, Inc.
CONSULTING ENGINEERS
6330 Belmont Road, Suite 4B
Downers Grove, IL 60516

USER NAME = msomer	DESIGNED - MH	REVISED -	
	DRAWN - MD/SR	REVISED -	
PLOT SCALE = 0.16666633 ' / in.	CHECKED - BL	REVISED -	
PLOT DATE = 11/12/2024	DATE - 9-13-2024	REVISED -	

STATE OF ILLINOIS
DEPARTMENT OF TRANSPORTATION

REMOVAL AND TEMPORARY LIGHTING PLAN
WEST HIGHWAY 50 & I–64

SCALE: 1"=50' | SHEET 1 OF 9 SHEETS | STA. 610+00 | TO STA. 649+00

F.A. RTE.	SECTION	COUNTY	TOTAL SHEETS	SHEET NO.
64	82-(4,5,6,7)-1RS-2	ST. CLAIR	388	308
		CONTRACT NO. 76R99		
	ILLINOIS	FED. AID PROJECT		

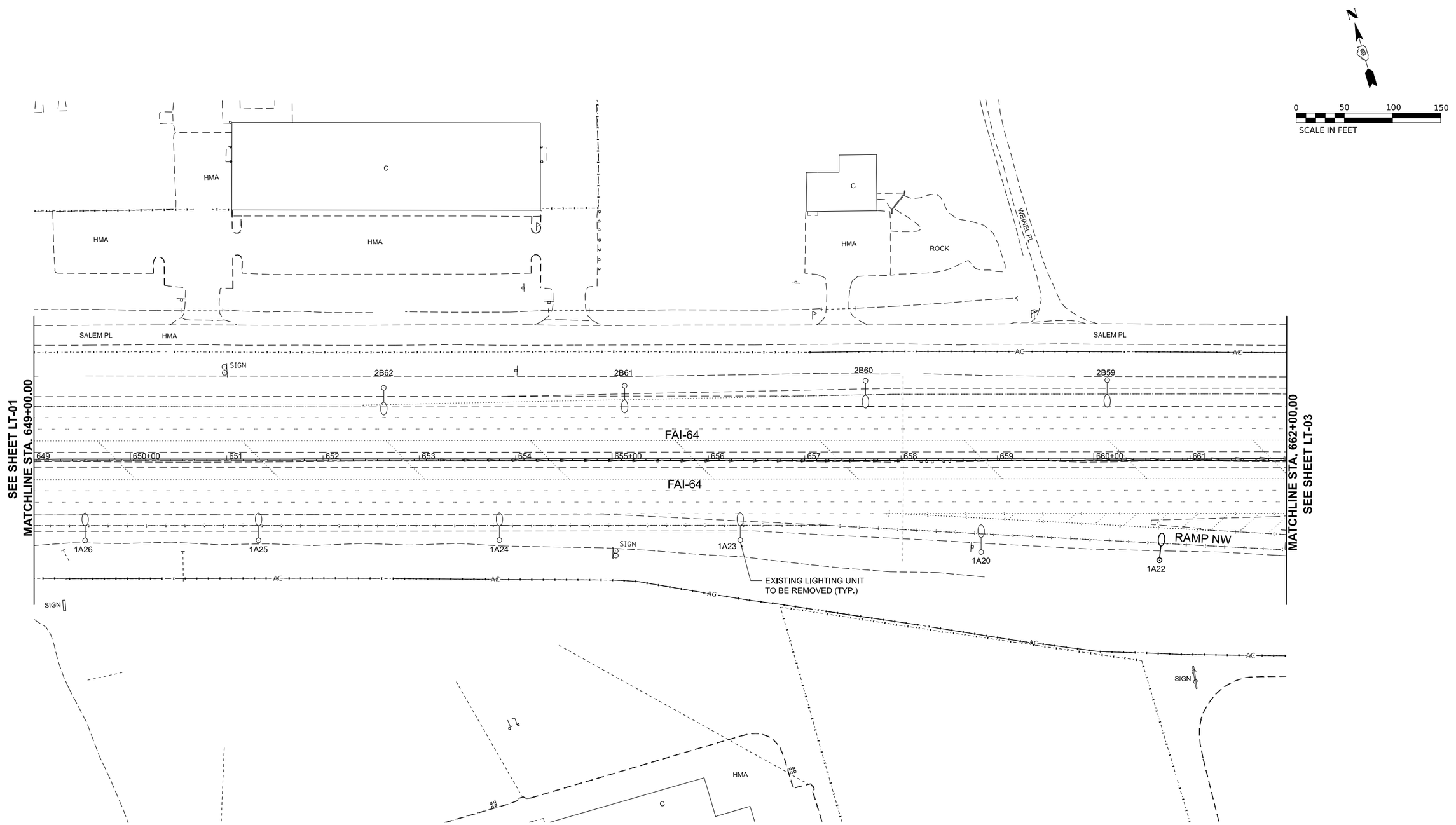

NOTES:

1. FOR GENERAL NOTES AND LEGENDS, SEE SHEET LTN-01.
2. THE EXISTING LIGHTING UNITS AS SHOWN ON THIS PLAN SHALL BE USED AS TEMPORARY LIGHTING UNTIL PROPOSED LIGHTING IS INSTALLED AND OPERATIONAL.

LT–02

MODEL: PLAN 2
FILE NAME: F:\Projects\1089 - VV PH I-II (206-045) - AMES\WO #4\Design\Sht\HWY 50\08762499-sheet HIGWAY 50 EXISTING.dgn

AMES Engineering, Inc.
CONSULTING ENGINEERS
6330 Belmont Road, Suite 4B
Downers Grove, IL 60516

USER NAME = msomer		DESIGNED - MH	REVISED -	
		DRAWN - MD/SR	REVISED -	
PLOT SCALE = 0.16666633 ' / In.		CHECKED - BL	REVISED -	
PLOT DATE = 11/12/2024		DATE - 9-13-2024	REVISED -	

STATE OF ILLINOIS
DEPARTMENT OF TRANSPORTATION

REMOVAL AND TEMPORARY LIGHTING PLAN
WEST HIGHWAY 50 & I–64

SCALE: 1"=50' | SHEET 2 OF 9 SHEETS | STA. 649+00 | TO STA. 662+00

F.A. RTE.	SECTION	COUNTY	TOTAL SHEETS	SHEET NO.
64	82-(4,5,6,7)-1RS-2	ST. CLAIR	388	309
		CONTRACT NO. 76R99		
	ILLINOIS FED. AID PROJECT			

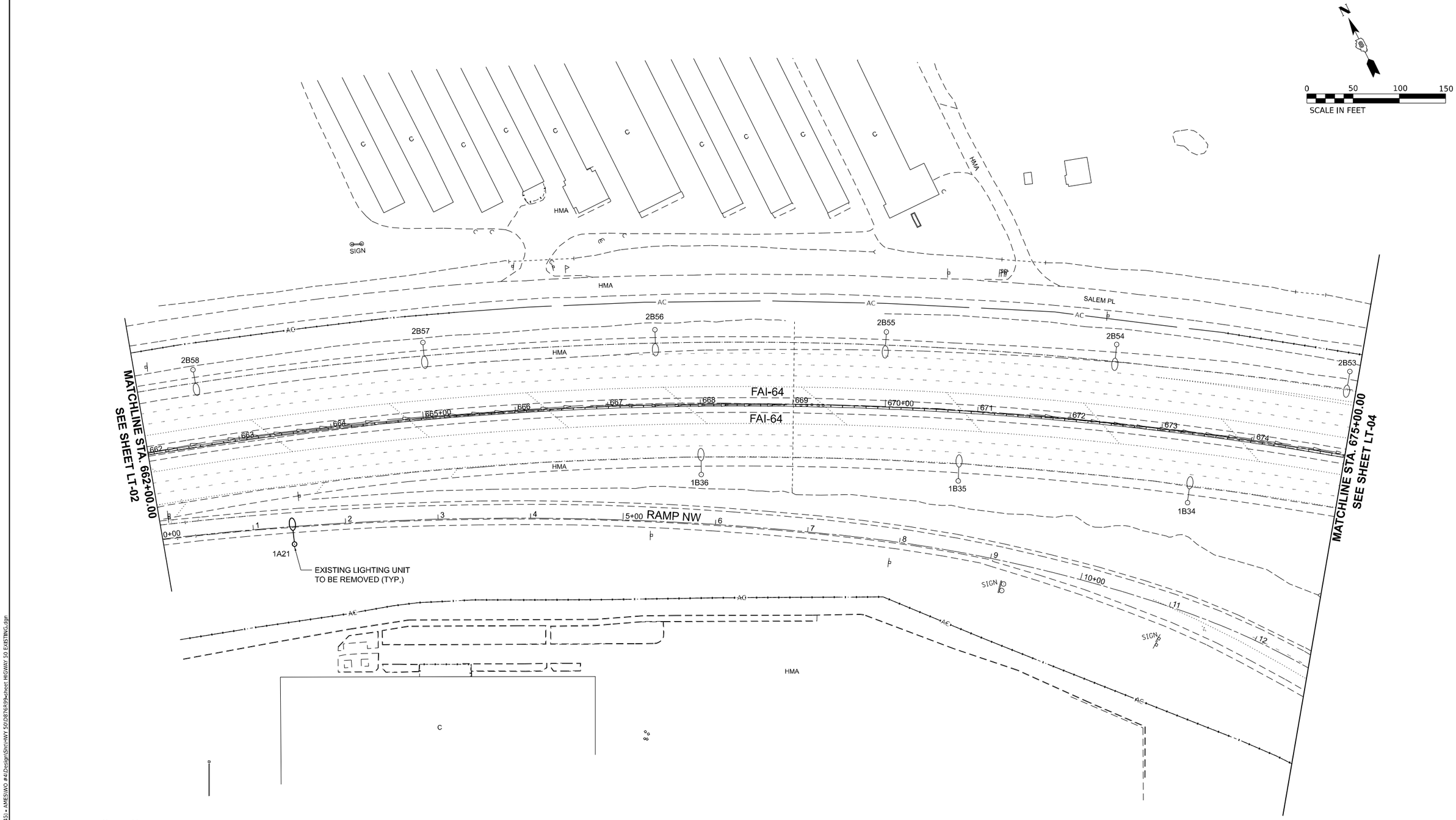

NOTES:

1. FOR GENERAL NOTES AND LEGENDS, SEE SHEET LTN-01.
2. THE EXISTING LIGHTING UNITS AS SHOWN ON THIS PLAN SHALL BE USED AS TEMPORARY LIGHTING UNTIL PROPOSED LIGHTING IS INSTALLED AND OPERATIONAL.

LT–03

MODEL: PLAN 3
FILE NAME: F:\Projects\1089 - VV PH I-II (206-045) - AMES\WO #4\Design\Sht\HWY 50\D876R99-sheet HIGWAY 50 EXISTING.dgn

AMES Engineering, Inc. CONSULTING ENGINEERS 6330 Belmont Road, Suite 4B Downers Grove, IL 60516	USER NAME = msomer	DESIGNED - MH	REVISED -	STATE OF ILLINOIS DEPARTMENT OF TRANSPORTATION	REMOVAL AND TEMPORARY LIGHTING PLAN WEST HIGHWAY 50 & I–64	F.A. RTE. 64	SECTION 82-(4,5,6,7)-1RS-2	COUNTY ST. CLAIR	TOTAL SHEETS 388	SHEET NO. 310
		DRAWN - MD/SR	REVISED -					CONTRACT NO. 76R99		
	PLOT SCALE = 0.16666633 ' / in.	CHECKED - BL	REVISED -							
	PLOT DATE = 11/12/2024	DATE - 9-13-2024	REVISED -		SCALE: 1"=50' SHEET 3 OF 9 SHEETS STA. 662+00 TO STA. 675+00		ILLINOIS	FED. AID PROJECT		

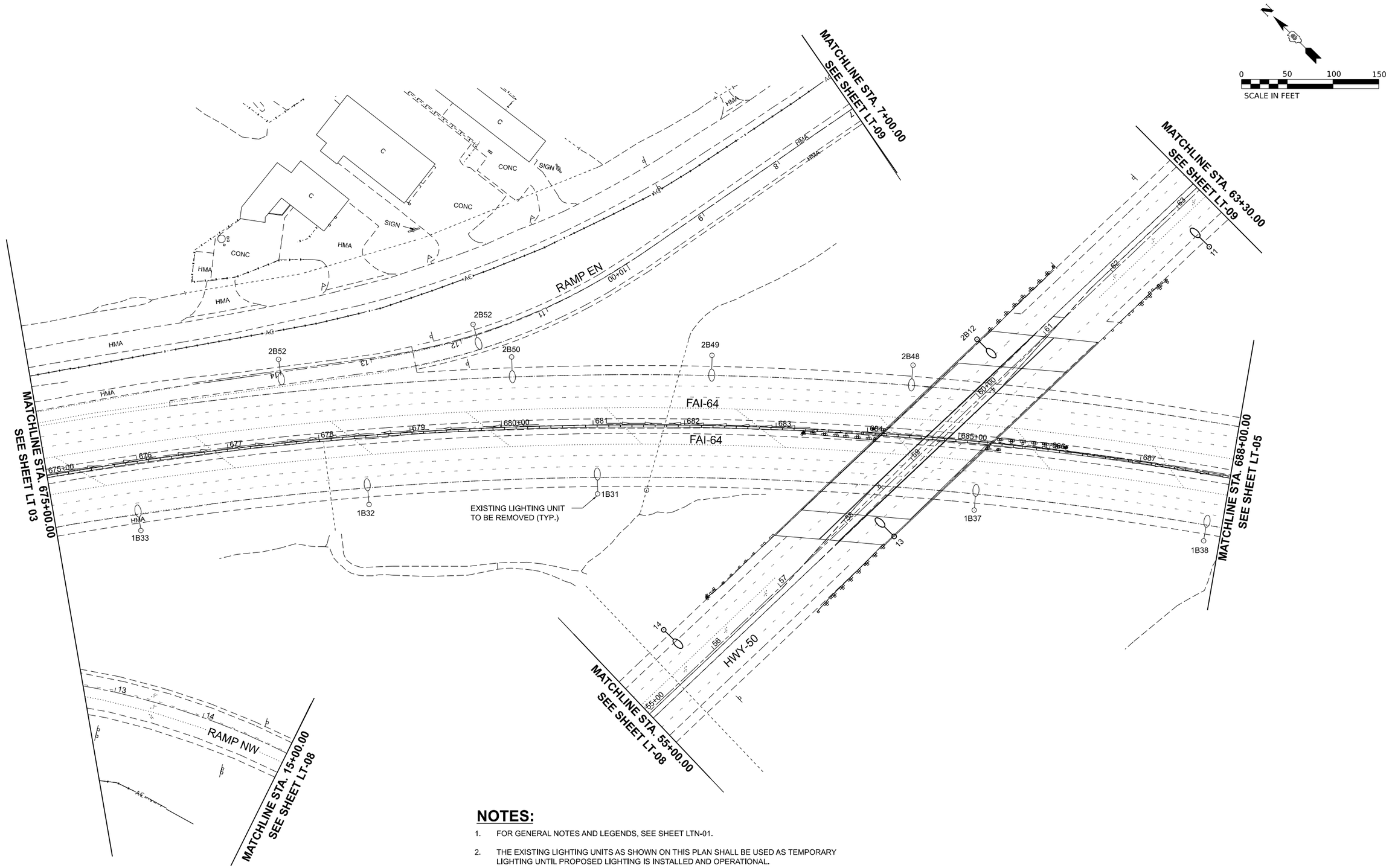

NOTES:

1. FOR GENERAL NOTES AND LEGENDS, SEE SHEET LTN-01.
2. THE EXISTING LIGHTING UNITS AS SHOWN ON THIS PLAN SHALL BE USED AS TEMPORARY LIGHTING UNTIL PROPOSED LIGHTING IS INSTALLED AND OPERATIONAL.

LT–04

MODEL: PLAN 4
FILE NAME: F:\Projects\1089 - VV PH I-II (206-045) - AMES\WO #4\Design\Sht\HWY 50\D876499sheet HIGWAY 50 EXISTING.dgn

AMES Engineering, Inc.
CONSULTING ENGINEERS
6330 Belmont Road, Suite 4B
Downers Grove, IL 60516

USER NAME = msomer	DESIGNED - MH	REVISED -	
	DRAWN - MD/SR	REVISED -	
PLOT SCALE = 0.16666633 ' / In.	CHECKED - BL	REVISED -	
PLOT DATE = 11/12/2024	DATE - 9-13-2024	REVISED -	

STATE OF ILLINOIS
DEPARTMENT OF TRANSPORTATION

REMOVAL AND TEMPORARY LIGHTING PLAN
WEST HIGHWAY 50 & I–64

SCALE: 1"=50' | SHEET 4 OF 9 SHEETS | STA. 675+00 | TO STA. 688+00

F.A. RTE.	SECTION	COUNTY	TOTAL SHEETS	SHEET NO.
64	82-(4,5,6,7)-1RS-2	ST. CLAIR	388	311
		CONTRACT NO. 76R99		
	ILLINOIS FED. AID PROJECT			

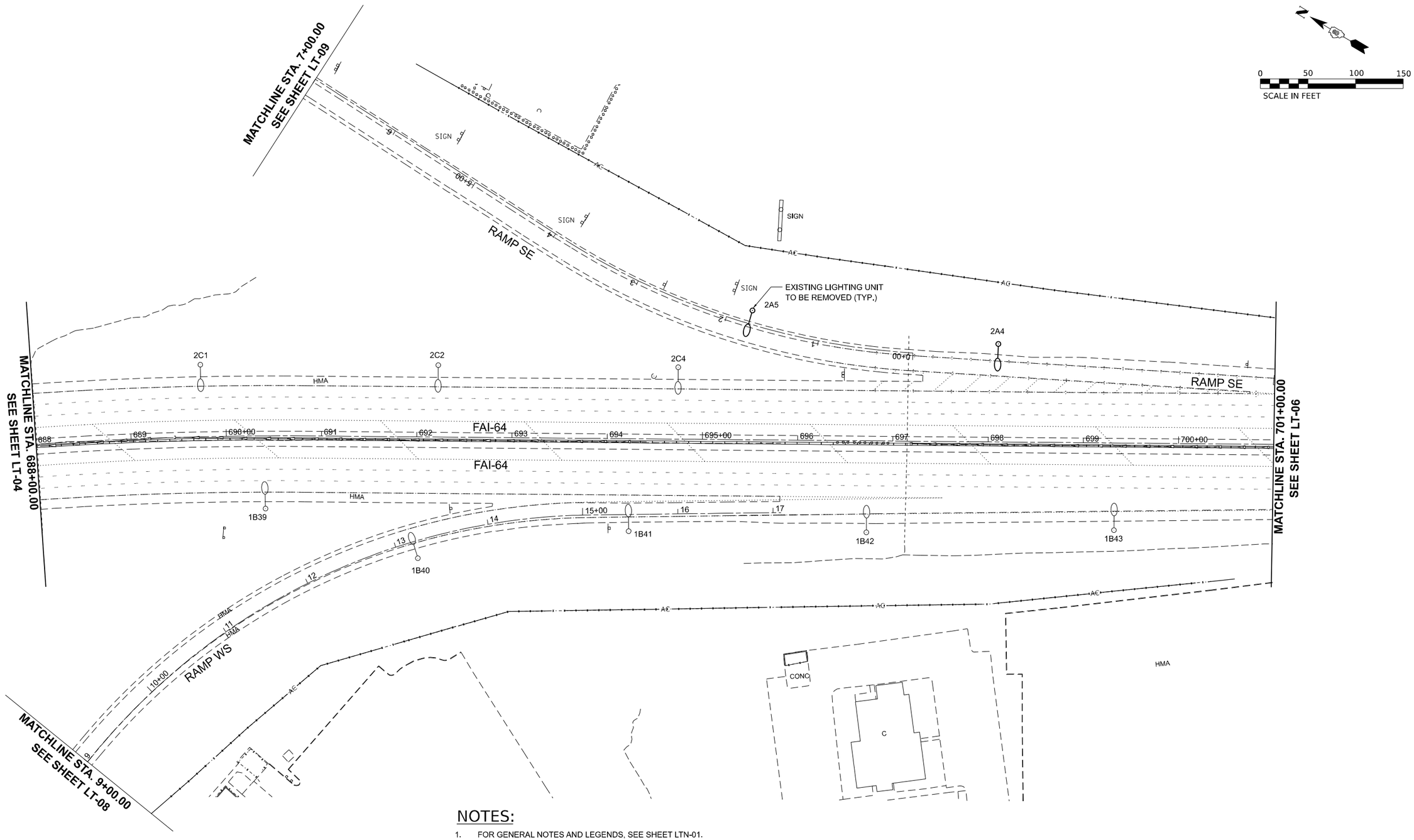

NOTES:

1. FOR GENERAL NOTES AND LEGENDS, SEE SHEET LTN-01.

2. THE EXISTING LIGHTING UNITS AS SHOWN ON THIS PLAN SHALL BE USED AS TEMPORARY LIGHTING UNTIL PROPOSED LIGHTING IS INSTALLED AND OPERATIONAL.

LT–05

MODEL: PLAN 5
FILE NAME: F:\Projects\1089 - WV PH III (2064045) - AMES\WO #4\Design\Sht\HWY 50\D876939-sheet HIGWAY 50 EXISTING.dgn

AMES Engineering, Inc.
CONSULTING ENGINEERS
6330 Belmont Road, Suite 4B
Downers Grove, IL 60516

USER NAME = msomer	DESIGNED - MH	REVISED -	
	DRAWN - MD/SR	REVISED -	
PLOT SCALE = 0.16666633 ' / in.	CHECKED - BL	REVISED -	
PLOT DATE = 11/12/2024	DATE - 9-13-2024	REVISED -	

STATE OF ILLINOIS
DEPARTMENT OF TRANSPORTATION

REMOVAL AND TEMPORARY LIGHTING PLAN
WEST HIGHWAY 50 & I–64

SCALE: 1"=50' | SHEET 5 OF 9 SHEETS | STA. 688+00 | TO STA. 701+00

F.A. RTE.	SECTION	COUNTY	TOTAL SHEETS	SHEET NO.
64	82-(4,5,6,7)-1RS-2	ST. CLAIR	388	312
		CONTRACT NO. 76R99		
	ILLINOIS FED. AID PROJECT			

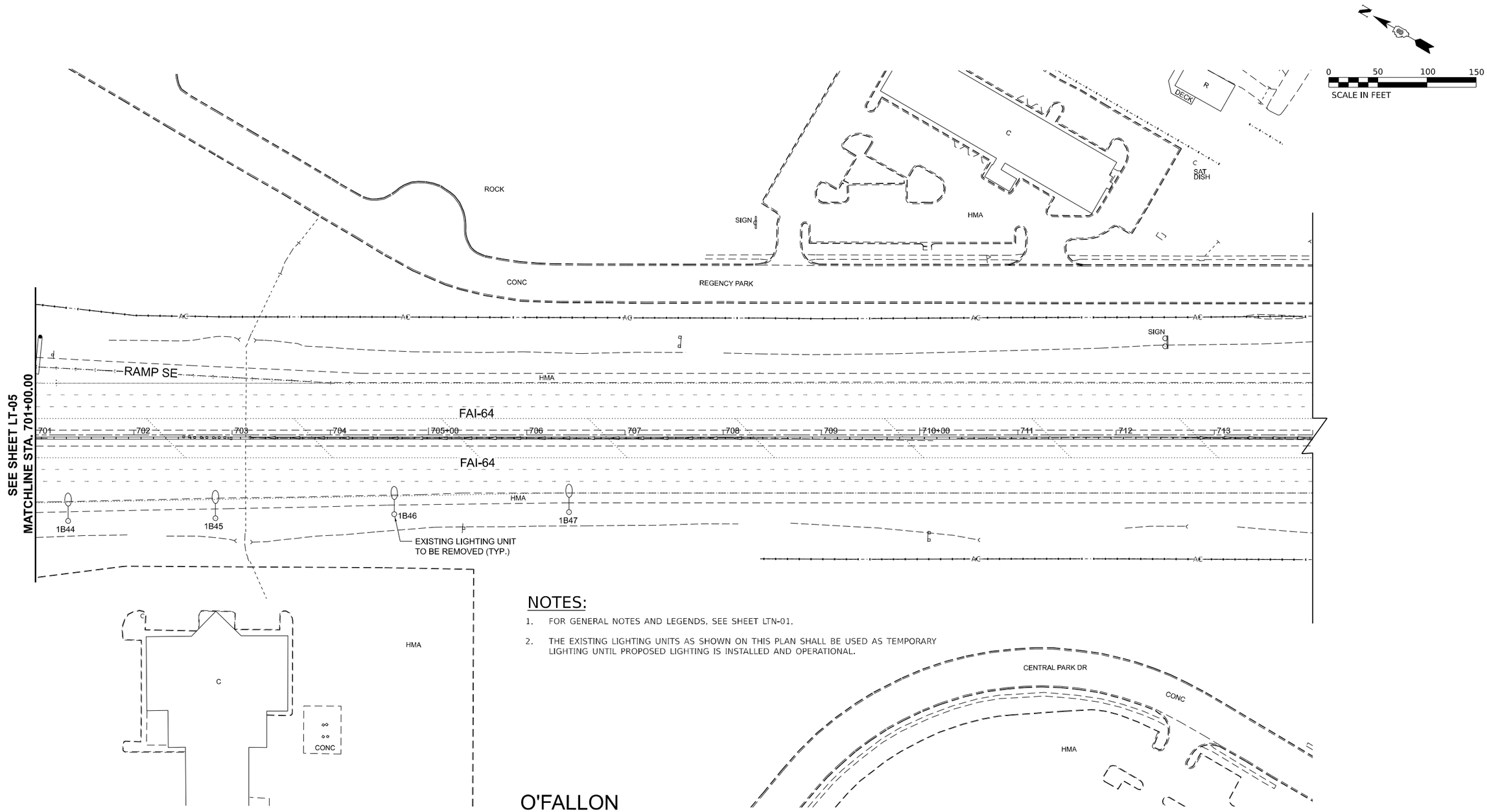

NOTES:

1. FOR GENERAL NOTES AND LEGENDS, SEE SHEET LTN-01.
2. THE EXISTING LIGHTING UNITS AS SHOWN ON THIS PLAN SHALL BE USED AS TEMPORARY LIGHTING UNTIL PROPOSED LIGHTING IS INSTALLED AND OPERATIONAL.

O'FALLON

LT–06

MODEL: PLAN 6
FILE NAME: F:\Projects\1089 - VV PH I-II (206-045) - AMES\WO #4\Design\Sht\HWY 50\D876939-sheet HIGWAY 50 EXISTING.dgn

AMES Engineering, Inc. CONSULTING ENGINEERS 6330 Belmont Road, Suite 4B Downers Grove, IL 60516	USER NAME = msomer	DESIGNED - MH	REVISED -	**STATE OF ILLINOIS** **DEPARTMENT OF TRANSPORTATION**	**REMOVAL AND TEMPORARY LIGHTING PLAN** **WEST HIGHWAY 50 & I–64**
		DRAWN - MD/SR	REVISED -		
	PLOT SCALE = 0.16666633 ' / in.	CHECKED - BL	REVISED -		SCALE: 1"=50' SHEET 6 OF 9 SHEETS STA. 701+00 TO STA. 714+00
	PLOT DATE = 11/12/2024	DATE - 9-13-2024	REVISED -		

F.A. RTE.	SECTION	COUNTY	TOTAL SHEETS	SHEET NO.
64	82-(4,5,6,7)-1RS-2	ST. CLAIR	388	313
		CONTRACT NO. 76R99		
	ILLINOIS FED. AID PROJECT			

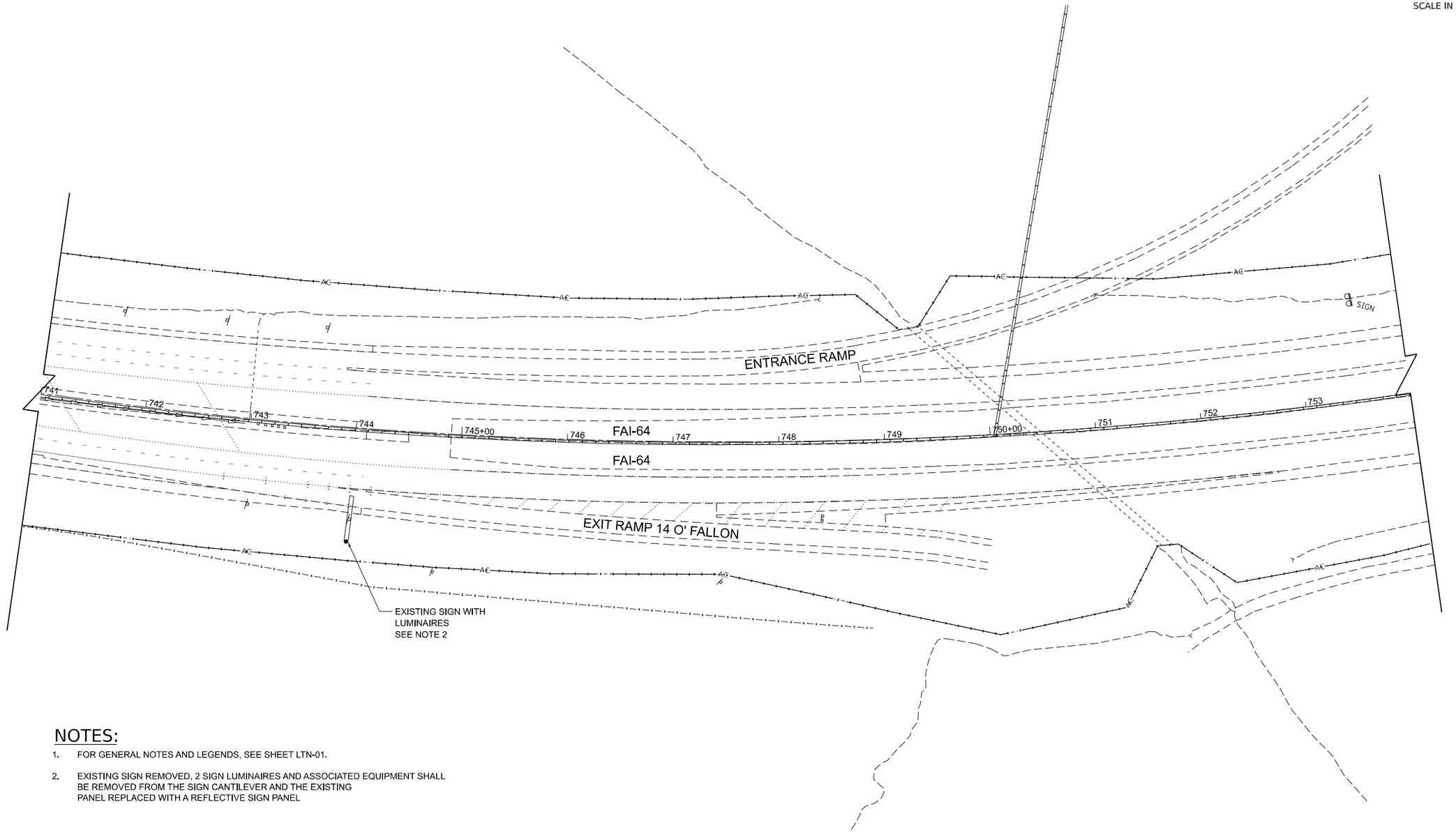

NOTES:

1. FOR GENERAL NOTES AND LEGENDS, SEE SHEET LTN-01.

2. EXISTING SIGN REMOVED, 2 SIGN LUMINAIRES AND ASSOCIATED EQUIPMENT SHALL BE REMOVED FROM THE SIGN CANTILEVER AND THE EXISTING PANEL REPLACED WITH A REFLECTIVE SIGN PANEL

LT–07

MODEL: PLAN 7
FILE NAME: F:\Projects\1089 - VV PH I-II (206-045) - AMES\WO #4\Design\SHT\HWY 50\D876499-sheet HIGWAY 50 EXISTING.dgn

AMES Engineering, Inc.
CONSULTING ENGINEERS
6330 Belmont Road, Suite 4B
Downers Grove, IL 60516

USER NAME = msomer		DESIGNED - MH	REVISED -	
		DRAWN - MD/SR	REVISED -	
PLOT SCALE = 0.16666633 ' / in.		CHECKED - BL	REVISED -	
PLOT DATE = 11/12/2024		DATE - 9-13-2024	REVISED -	

STATE OF ILLINOIS
DEPARTMENT OF TRANSPORTATION

REMOVAL AND TEMPORARY LIGHTING PLAN
WEST HIGHWAY 50 & I–64

SCALE: 1"=50' | SHEET 7 OF 9 SHEETS | STA. 741+00 | TO STA. 754+00

F.A. RTE.	SECTION	COUNTY	TOTAL SHEETS	SHEET NO.
64	82-(4,5,6,7)-1RS-2	ST. CLAIR	388	314
		CONTRACT NO. 76R99		
	ILLINOIS FED. AID PROJECT			

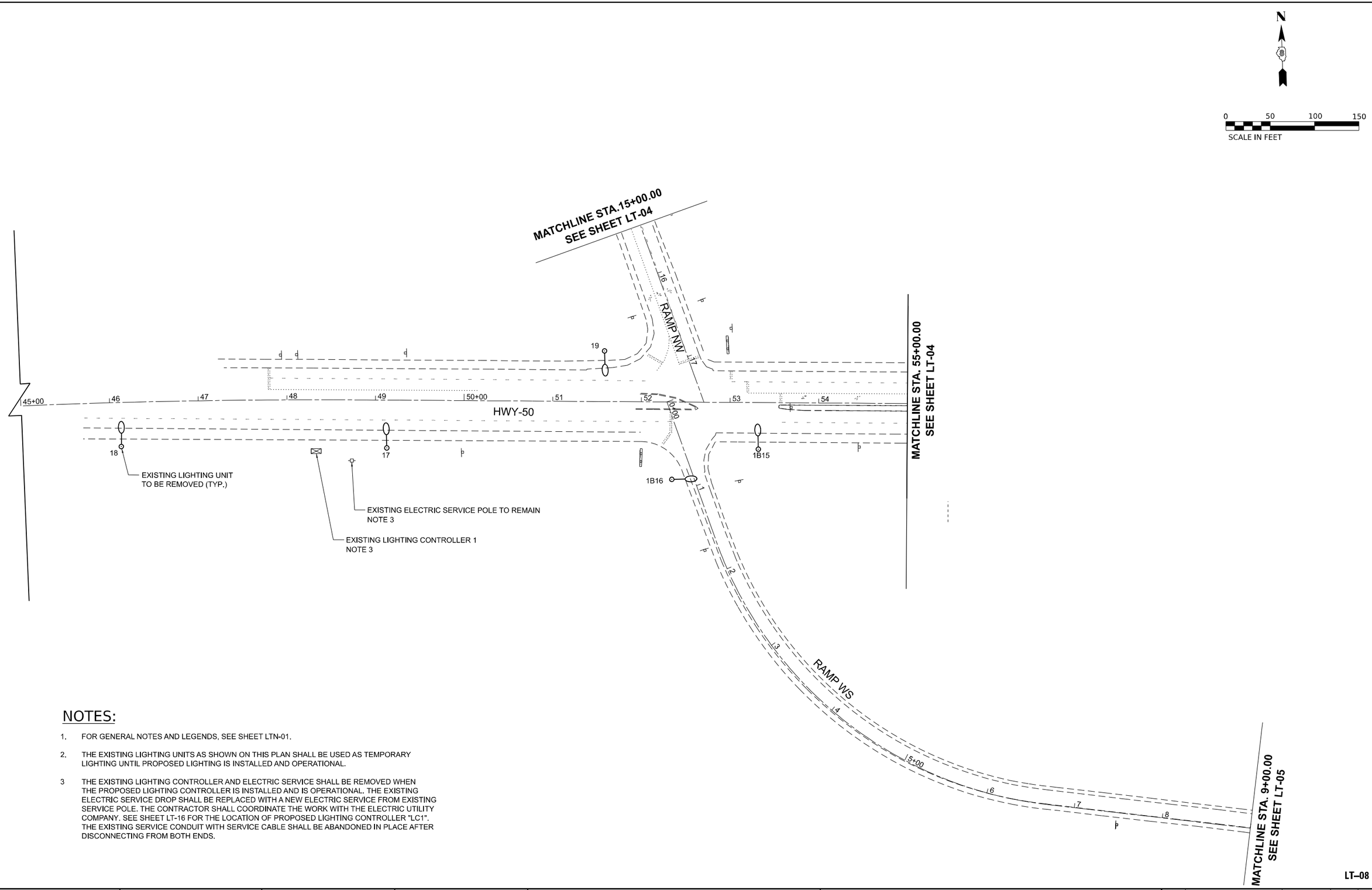

NOTES:

1. FOR GENERAL NOTES AND LEGENDS, SEE SHEET LTN-01.
2. THE EXISTING LIGHTING UNITS AS SHOWN ON THIS PLAN SHALL BE USED AS TEMPORARY LIGHTING UNTIL PROPOSED LIGHTING IS INSTALLED AND OPERATIONAL.
3. THE EXISTING LIGHTING CONTROLLER AND ELECTRIC SERVICE SHALL BE REMOVED WHEN THE PROPOSED LIGHTING CONTROLLER IS INSTALLED AND IS OPERATIONAL. THE EXISTING ELECTRIC SERVICE DROP SHALL BE REPLACED WITH A NEW ELECTRIC SERVICE FROM EXISTING SERVICE POLE. THE CONTRACTOR SHALL COORDINATE THE WORK WITH THE ELECTRIC UTILITY COMPANY. SEE SHEET LT-16 FOR THE LOCATION OF PROPOSED LIGHTING CONTROLLER "LC1". THE EXISTING SERVICE CONDUIT WITH SERVICE CABLE SHALL BE ABANDONED IN PLACE AFTER DISCONNECTING FROM BOTH ENDS.

LT–08

MODEL: PLAN 8
FILE NAME: F:\Projects\1089 - WV PH III (206-045) - AMES\WO #4\Design\Sht\HWY 50\08762699sheet HIGWAY 50 EXISTING.dgn

AMES Engineering, Inc.
CONSULTING ENGINEERS
6330 Belmont Road, Suite 4B
Downers Grove, IL 60516

USER NAME = msomer	DESIGNED - MH	REVISED -	
	DRAWN - MD/SR	REVISED -	
PLOT SCALE = 0.16666633 ' / in.	CHECKED - BL	REVISED -	
PLOT DATE = 11/12/2024	DATE - 9-13-2024	REVISED -	

STATE OF ILLINOIS
DEPARTMENT OF TRANSPORTATION

REMOVAL AND TEMPORARY LIGHTING PLAN
WEST HIGHWAY 50 & I–64

SCALE: 1"=50' | SHEET 8 OF 9 SHEETS | STA. 45+00 | TO STA. 59+00

F.A. RTE.	SECTION	COUNTY	TOTAL SHEETS	SHEET NO.
64	82-(4,5,6,7)-1RS-2	ST. CLAIR	388	315
		CONTRACT NO. 76R99		
	ILLINOIS	FED. AID PROJECT		

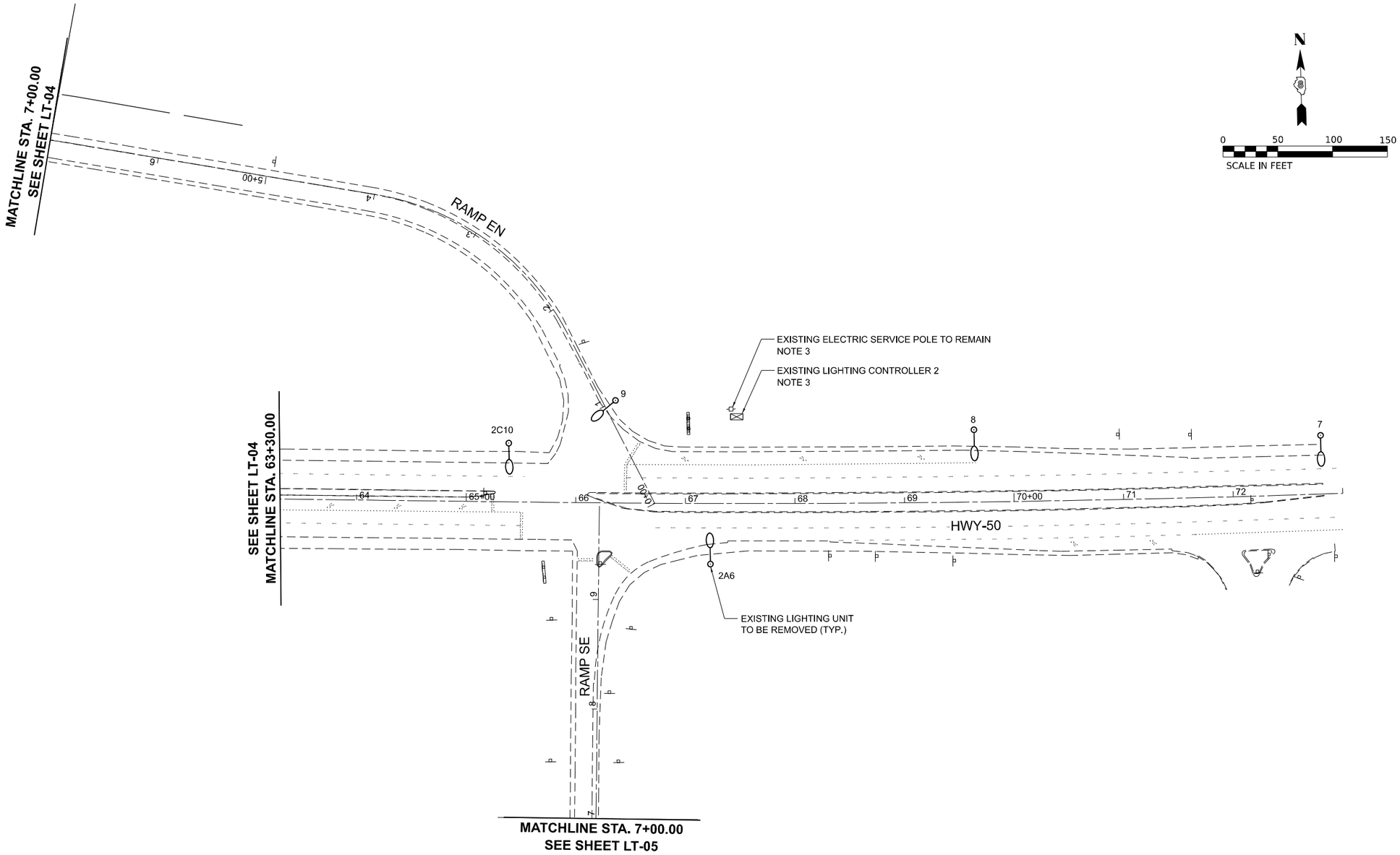

NOTES:

1. FOR GENERAL NOTES AND LEGENDS, SEE SHEET LTN-01.
2. THE EXISTING LIGHTING UNITS AS SHOWN ON THIS PLAN SHALL BE USED AS TEMPORARY LIGHTING UNTIL PROPOSED LIGHTING IS INSTALLED AND OPERATIONAL.
3. THE EXISTING LIGHTING CONTROLLER AND ELECTRIC SERVICE SHALL BE REMOVED WHEN THE PROPOSED LIGHTING CONTROLLER IS INSTALLED AND IS OPERATIONAL. THE EXISTING ELECTRIC SERVICE DROP SHALL BE REPLACED WITH A NEW ELECTRIC SERVICE FROM EXISTING SERVICE POLE. THE CONTRACTOR SHALL COORDINATE THE WORK WITH THE ELECTRIC UTILITY COMPANY. SEE SHEET LT-17 FOR THE LOCATION OF THE PROPOSED NEW LIGHTING CONTROLLER "LC2".

LT–09

MODEL: PLAN 9
FILE NAME: F:\Projects\1089 - VV PH I-II (206-045) - AMES\WO #4\Design\Sht\HWY 50\D876R99-sheet HIGWAY 50 EXISTING.dgn

AMES Engineering, Inc. CONSULTING ENGINEERS 6330 Belmont Road, Suite 4B Downers Grove, IL 60516	USER NAME = msomer	DESIGNED - MH	REVISED -	STATE OF ILLINOIS DEPARTMENT OF TRANSPORTATION	REMOVAL AND TEMPORARY LIGHTING PLAN WEST HIGHWAY 50 & I–64
		DRAWN - MD/SR	REVISED -		
	PLOT SCALE = 0.16666633 ' / in.	CHECKED - BL	REVISED -		
	PLOT DATE = 11/12/2024	DATE - 9-13-2024	REVISED -		SCALE: 1"=50' SHEET 9 OF 9 SHEETS STA. 59+00 TO STA. 73+00

F.A. RTE.	SECTION	COUNTY	TOTAL SHEETS	SHEET NO.
64	82-(4,5,6,7)-1RS-2	ST. CLAIR	388	316
		CONTRACT NO. 76R99		
		ILLINOIS FED. AID PROJECT		

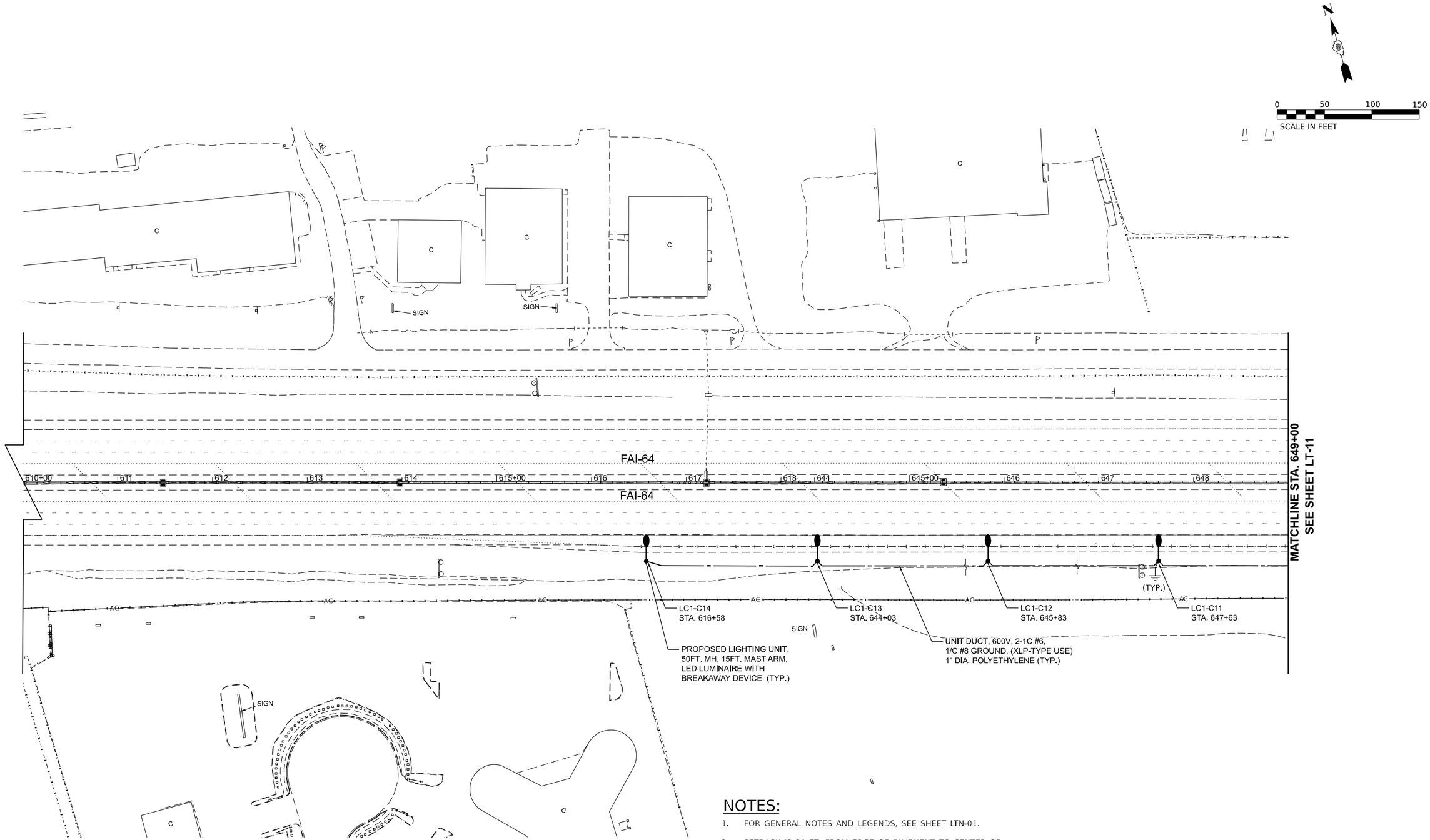

NOTES:

1. FOR GENERAL NOTES AND LEGENDS, SEE SHEET LTN-01.
2. SETBACK IS 21 FT. FROM EDGE OF PAVEMENT TO CENTER OF LIGHT POLE, UNLESS NOTED OTHERWISE.

LT–10

MODEL: PLAN 1
FILE NAME: F:\Projects\1089 - VV PH HI (206-045) - AMES\WO #4\Design\Sht\HWY 50\D876899-sheet HIGWAY 50 PROPOSED.dgn

AMES Engineering, Inc.
CONSULTING ENGINEERS
6330 Belmont Road, Suite 4B
Downers Grove, IL 60516

USER NAME = msomer	DESIGNED - MH	REVISED -	
	DRAWN - MD/SR	REVISED -	
PLOT SCALE = 0.16666633 ' / in.	CHECKED - BL	REVISED -	
PLOT DATE = 11/12/2024	DATE - 9-13-2024	REVISED -	

STATE OF ILLINOIS
DEPARTMENT OF TRANSPORTATION

PROPOSED LIGHTING PLAN
WEST HIGHWAY 50 & I–64

SCALE: 1"=50' | SHEET 1 OF 9 SHEETS | STA. 610+00 | TO STA. 649+00

F.A.I. RTE.	SECTION	COUNTY	TOTAL SHEETS	SHEET NO.
64	82-(4,5,6,7)-1RS-2	ST. CLAIR	388	317
		CONTRACT NO. 76R99		
	ILLINOIS FED. AID PROJECT			

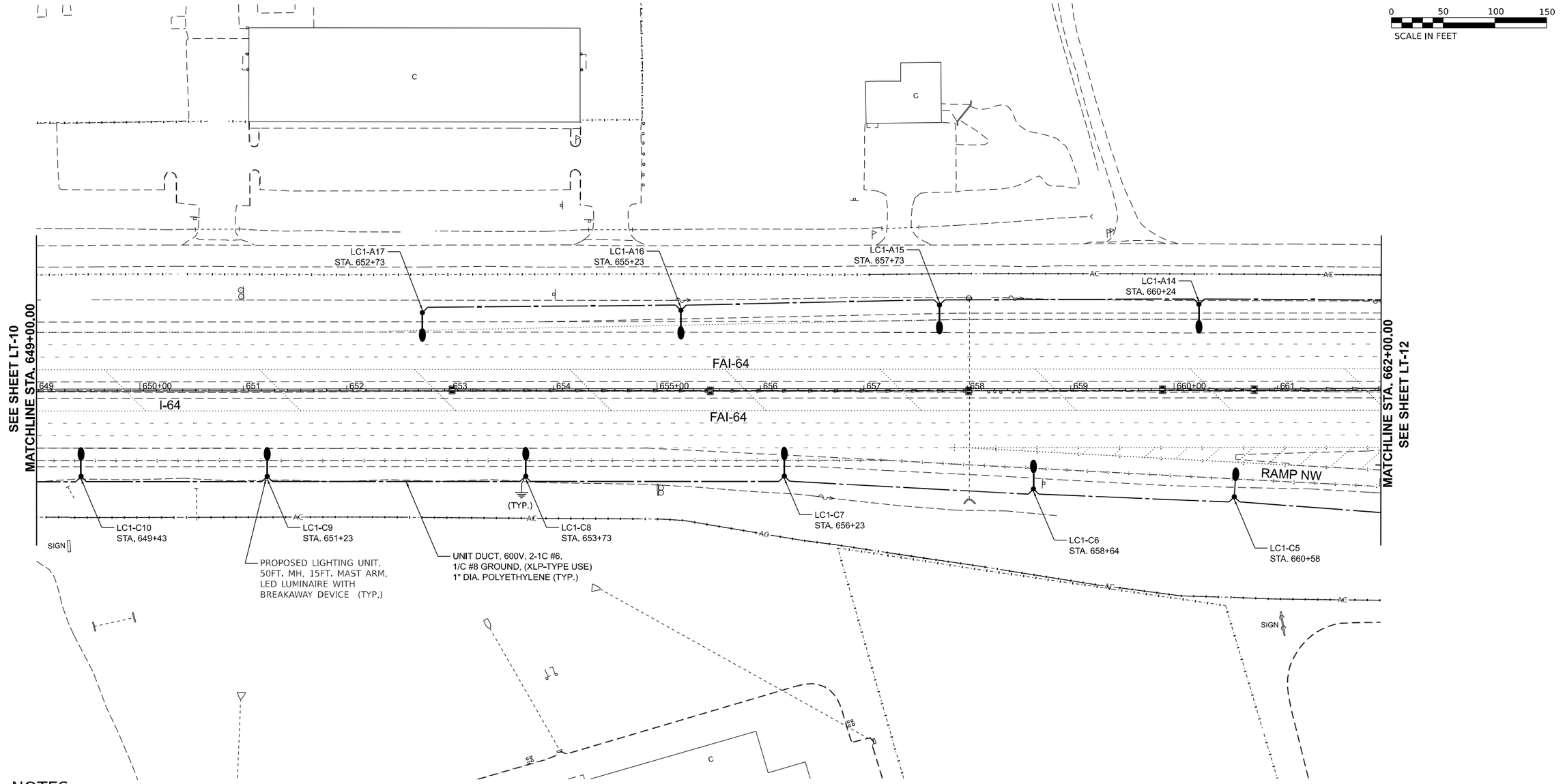

NOTES:

1. FOR GENERAL NOTES AND LEGENDS, SEE SHEET LTN-01.
2. SETBACK IS 21 FT. FROM EDGE OF PAVEMENT TO CENTER OF LIGHT POLE, UNLESS NOTED OTHERWISE.

LT–11

MODEL: PLAN 2
FILE NAME: F:\Projects\11089 • VV PH I-II (206-043) • AMES\WO #4\Design\SH\HWY 50\D8766399-sheet HIGWAY 50 PROPOSED.dgn

AMES Engineering, Inc.
CONSULTING ENGINEERS
6330 Belmont Road, Suite 4B
Downers Grove, IL 60516

USER NAME = msomer	DESIGNED - MH	REVISED -	
	DRAWN - MD/SR	REVISED -	
PLOT SCALE = 0.16666633 ' / in.	CHECKED - BL	REVISED -	
PLOT DATE = 11/12/2024	DATE - 9-13-2024	REVISED -	

STATE OF ILLINOIS
DEPARTMENT OF TRANSPORTATION

PROPOSED LIGHTING PLAN
WEST HIGHWAY 50 & I–64

SCALE: 1"=50' | SHEET 2 OF 9 SHEETS | STA. 649+00 | TO STA. 662+00

F.A.I. RTE.	SECTION	COUNTY	TOTAL SHEETS	SHEET NO.
64	82-(4,5,6,7)-1RS-2	ST. CLAIR	388	318
		CONTRACT NO. 76R99		
	ILLINOIS FED. AID PROJECT			

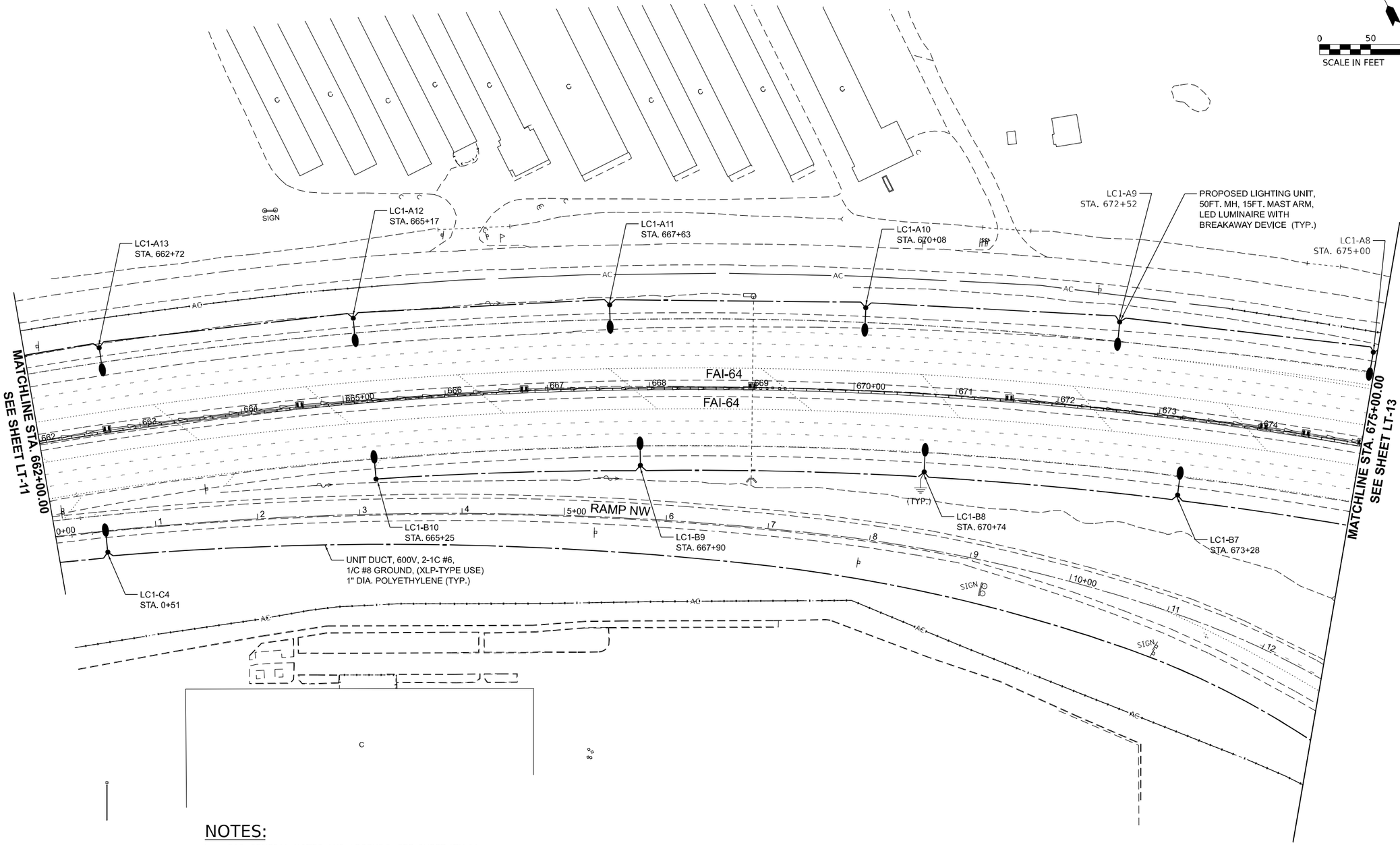

NOTES:

1. FOR GENERAL NOTES AND LEGENDS, SEE SHEET LTN-01.
2. SETBACK IS 21 FT. FROM EDGE OF PAVEMENT TO CENTER OF LIGHT POLE, UNLESS NOTED OTHERWISE.
3. UCGS STANDS FOR UNDERGROUND CONDUIT, GALVANIZED STEEL.

LT–12

MODEL: PLAN 3
FILE NAME: F:\Projects\1089 - VV PH I-II (206-045) - AMES\WO #4\Design\Sht\HWY 50\D876939-sheet HIGWAY 50 PROPOSED.dgn

AMES Engineering, Inc.
CONSULTING ENGINEERS
6330 Belmont Road, Suite 4B
Downers Grove, IL 60516

USER NAME = msomer	DESIGNED - MH	REVISED -	
	DRAWN - MD/SR	REVISED -	
PLOT SCALE = 0.16666633 ' / in.	CHECKED - BL	REVISED -	
PLOT DATE = 11/12/2024	DATE - 9-13-2024	REVISED -	

STATE OF ILLINOIS
DEPARTMENT OF TRANSPORTATION

PROPOSED LIGHTING PLAN
WEST HIGHWAY 50 & I–64

SCALE: 1"=50' | SHEET 3 OF 9 SHEETS | STA. 662+00 | TO STA. 675+00

F.A.I. RTE.	SECTION	COUNTY	TOTAL SHEETS	SHEET NO.
64	82-(4,5,6,7)-1RS-2	ST. CLAIR	388	319
		CONTRACT NO. 76R99		
	ILLINOIS	FED. AID PROJECT		

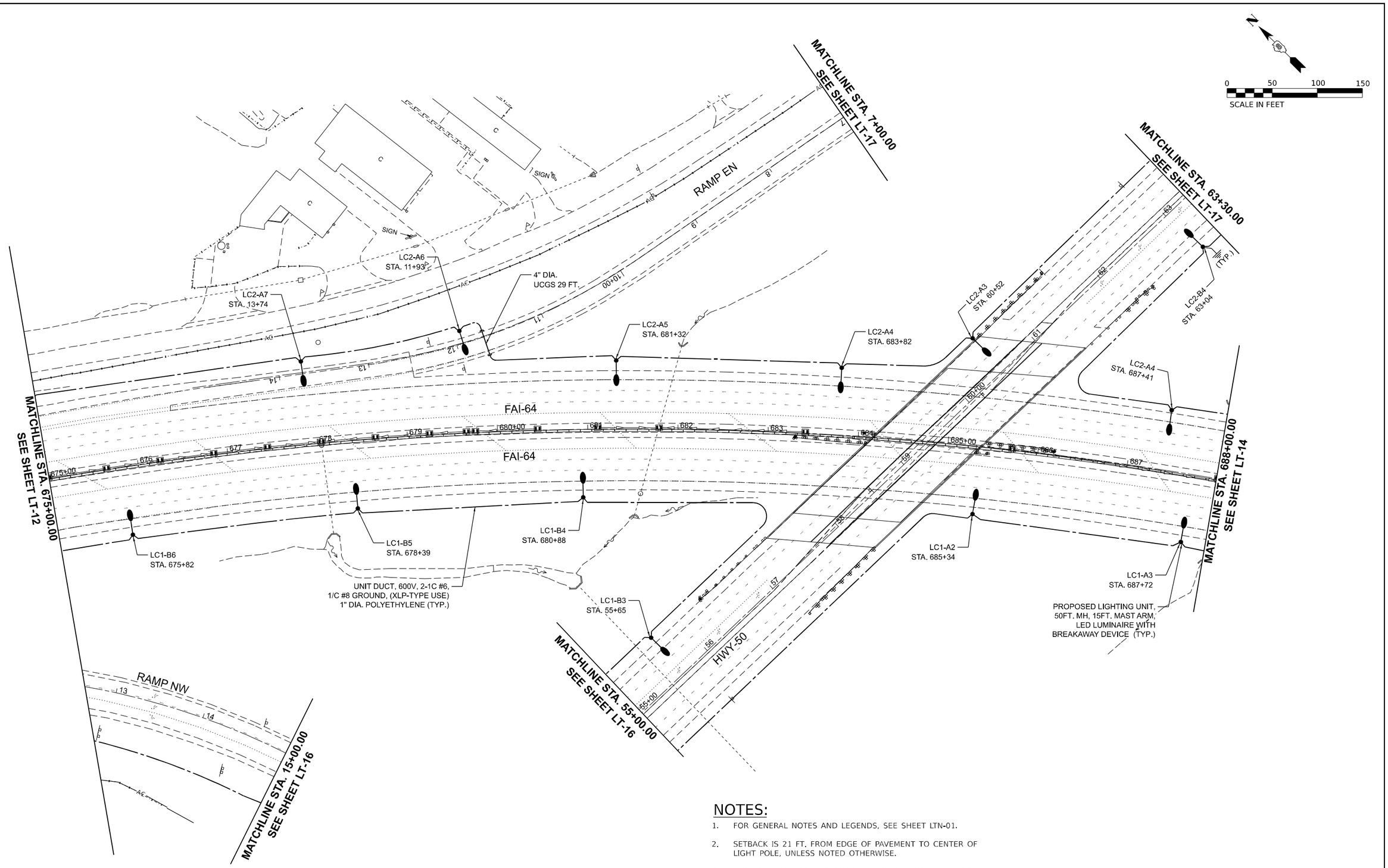

NOTES:

1. FOR GENERAL NOTES AND LEGENDS, SEE SHEET LTN-01.
2. SETBACK IS 21 FT. FROM EDGE OF PAVEMENT TO CENTER OF LIGHT POLE, UNLESS NOTED OTHERWISE.
3. UCGS STANDS FOR UNDERGROUND CONDUIT, GALVANIZED STEEL.

LT–13

MODEL: PLAN 4
FILE NAME: F:\Projects\1089 - VV PH III (206-045) - AMES\WO #4\Design\Sht\HWY 50\0876R99-sheet HIGWAY 50 PROPOSED.dgn

AMES Engineering, Inc.
CONSULTING ENGINEERS
6330 Belmont Road, Suite 4B
Downers Grove, IL 60516

USER NAME = msomer	DESIGNED - MH	REVISED -	
	DRAWN - MD/SR	REVISED -	
PLOT SCALE = 0.16666633 ' / In.	CHECKED - BL	REVISED -	
PLOT DATE = 11/12/2024	DATE - 9-13-2024	REVISED -	

STATE OF ILLINOIS
DEPARTMENT OF TRANSPORTATION

PROPOSED LIGHTING PLAN
WEST HIGHWAY 50 & I–64

SCALE: 1"=50' | SHEET 4 OF 9 SHEETS | STA. 675+00 TO STA. 688+00

F.A.I. RTE.	SECTION	COUNTY	TOTAL SHEETS	SHEET NO.
64	82-(4,5,6,7)-1RS-2	ST. CLAIR	388	320
		CONTRACT NO. 76R99		
	ILLINOIS	FED. AID PROJECT		

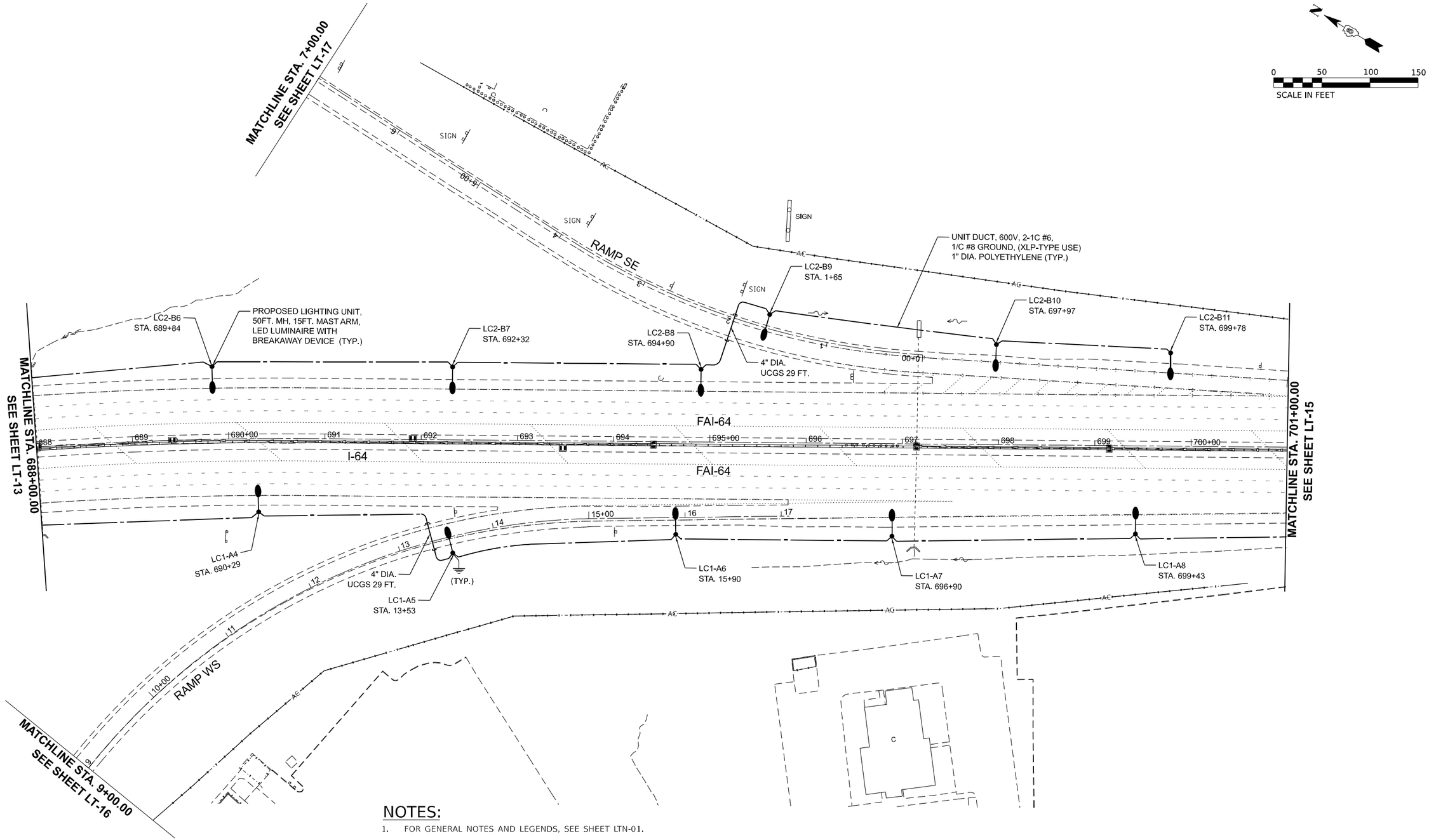

NOTES:

1. FOR GENERAL NOTES AND LEGENDS, SEE SHEET LTN-01.
2. SETBACK IS 21 FT. FROM EDGE OF PAVEMENT TO CENTER OF LIGHT POLE, UNLESS NOTED OTHERWISE.
3. UCGS STANDS FOR UNDERGROUND CONDUIT, GALVANIZED STEEL.

LT–14

MODEL: PLAN 5
FILE NAME: F:\Projects\1089 - VV PH I-II (206-045) - AMES\WO #4\Design\Sht\HWY 50\D876R99-sheet HIGWAY 50 PROPOSED.dgn

AMES Engineering, Inc. CONSULTING ENGINEERS 6330 Belmont Road, Suite 4B Downers Grove, IL 60516	USER NAME = msomer	DESIGNED - MH	REVISED -	STATE OF ILLINOIS DEPARTMENT OF TRANSPORTATION	PROPOSED LIGHTING PLAN WEST HIGHWAY 50 & I–64
		DRAWN - MD/SR	REVISED -		
	PLOT SCALE = 0.16666633 ' / in.	CHECKED - BL	REVISED -		
	PLOT DATE = 11/12/2024	DATE - 9-13-2024	REVISED -		SCALE: 1"=50' SHEET 5 OF 9 SHEETS STA. 688+00 TO STA. 701+00

F.A.I. RTE.	SECTION	COUNTY	TOTAL SHEETS	SHEET NO.
64	82-(4,5,6,7)-1RS-2	ST. CLAIR	388	321
		CONTRACT NO. 76R99		
		ILLINOIS	FED. AID PROJECT	

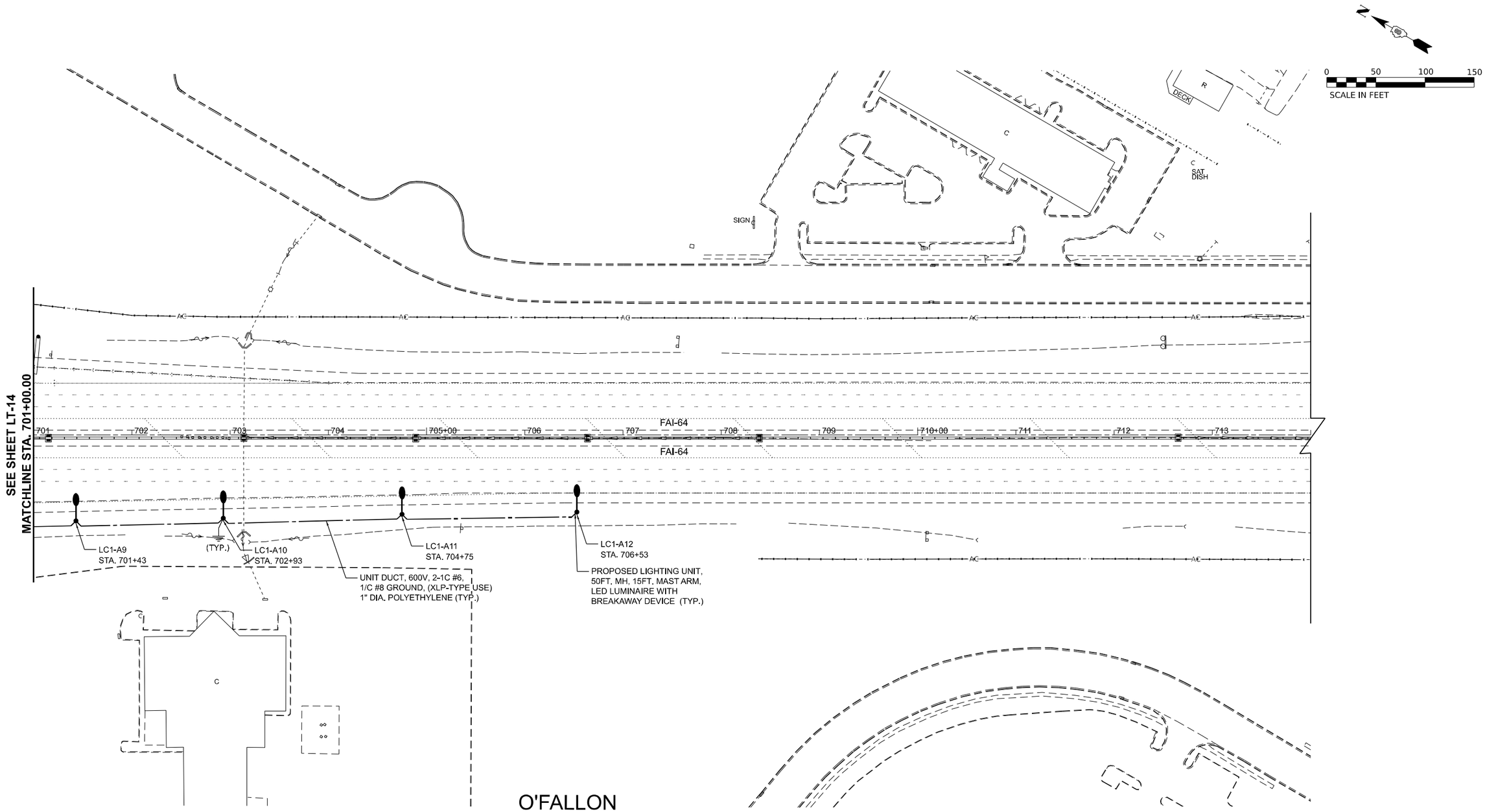

NOTES:

1. FOR GENERAL NOTES AND LEGENDS, SEE SHEET LTN-01.
2. SETBACK IS 21 FT. FROM EDGE OF PAVEMENT TO CENTER OF LIGHT POLE, UNLESS NOTED OTHERWISE.

LT–15

MODEL: PLAN 6
FILE NAME: F:\Projects\1089 - VV PH HJI (206-045) - AMES\WO #4\Design\Sht\HWY 50\D876893-sheet HIGWAY 50 PROPOSED.dgn

AMES Engineering, Inc.
CONSULTING ENGINEERS
6330 Belmont Road, Suite 4B
Downers Grove, IL 60516

USER NAME = msomer	DESIGNED - MH	REVISED -	
	DRAWN - MD/SR	REVISED -	
PLOT SCALE = 0.16666633 ' / in.	CHECKED - BL	REVISED -	
PLOT DATE = 11/12/2024	DATE - 9-13-2024	REVISED -	

STATE OF ILLINOIS
DEPARTMENT OF TRANSPORTATION

PROPOSED LIGHTING PLAN
WEST HIGHWAY 50 & I–64

SCALE: 1"=50' | SHEET 6 OF 9 SHEETS | STA. 701+00 | TO STA. 714+00

F.A.I. RTE.	SECTION	COUNTY	TOTAL SHEETS	SHEET NO.
64	82-(4,5,6,7)-1RS-2	ST. CLAIR	388	322
		CONTRACT NO. 76R99		
		ILLINOIS	FED. AID PROJECT	

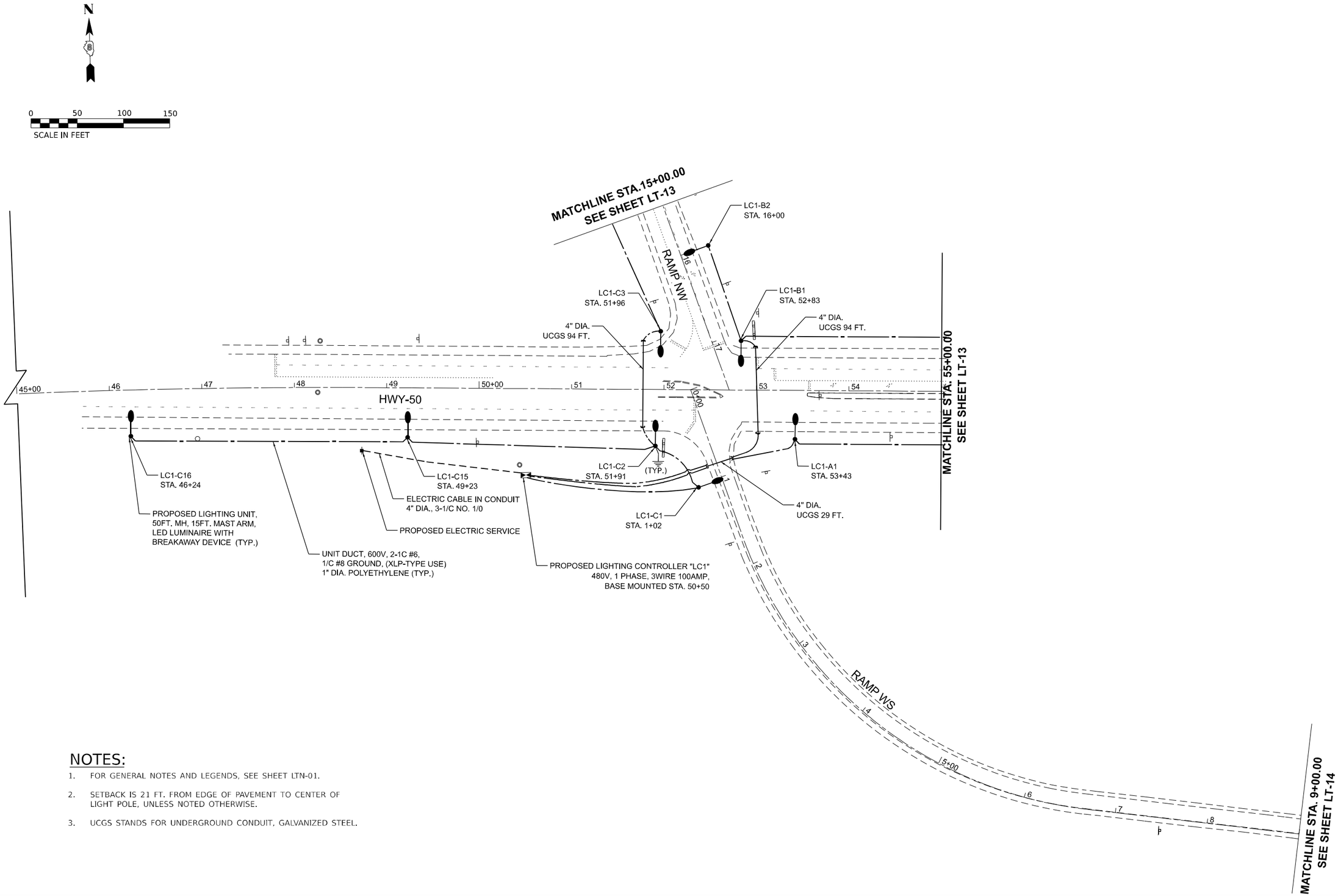

NOTES:

1. FOR GENERAL NOTES AND LEGENDS, SEE SHEET LTN-01.
2. SETBACK IS 21 FT. FROM EDGE OF PAVEMENT TO CENTER OF LIGHT POLE, UNLESS NOTED OTHERWISE.
3. UCGS STANDS FOR UNDERGROUND CONDUIT, GALVANIZED STEEL.

LT–16

MODEL: PLAN 8
FILE NAME: F:\Projects\1089 - VV PH I-II (206-045) - AMES\WO #4\Design\Sht\HWY 50\D876R99-sheet HIGWAY 50 PROPOSED.dgn

AMES Engineering, Inc. CONSULTING ENGINEERS 6330 Belmont Road, Suite 4B Downers Grove, IL 60516	USER NAME = msomer	DESIGNED - MH	REVISED -	STATE OF ILLINOIS DEPARTMENT OF TRANSPORTATION	PROPOSED LIGHTING PLAN WEST HIGHWAY 50 & I–64
		DRAWN - MD/SR	REVISED -		
	PLOT SCALE = 0.16666633 ' / in.	CHECKED - BL	REVISED -		
	PLOT DATE = 11/12/2024	DATE - 9-13-2024	REVISED -		SCALE: 1"=50' SHEET 8 OF 9 SHEETS STA. 45+00 TO STA. 59+00

F.A.I. RTE.	SECTION	COUNTY	TOTAL SHEETS	SHEET NO.
64	82-(4,5,6,7)-1RS-2	ST. CLAIR	388	323
		CONTRACT NO. 76R99		
		ILLINOIS FED. AID PROJECT		

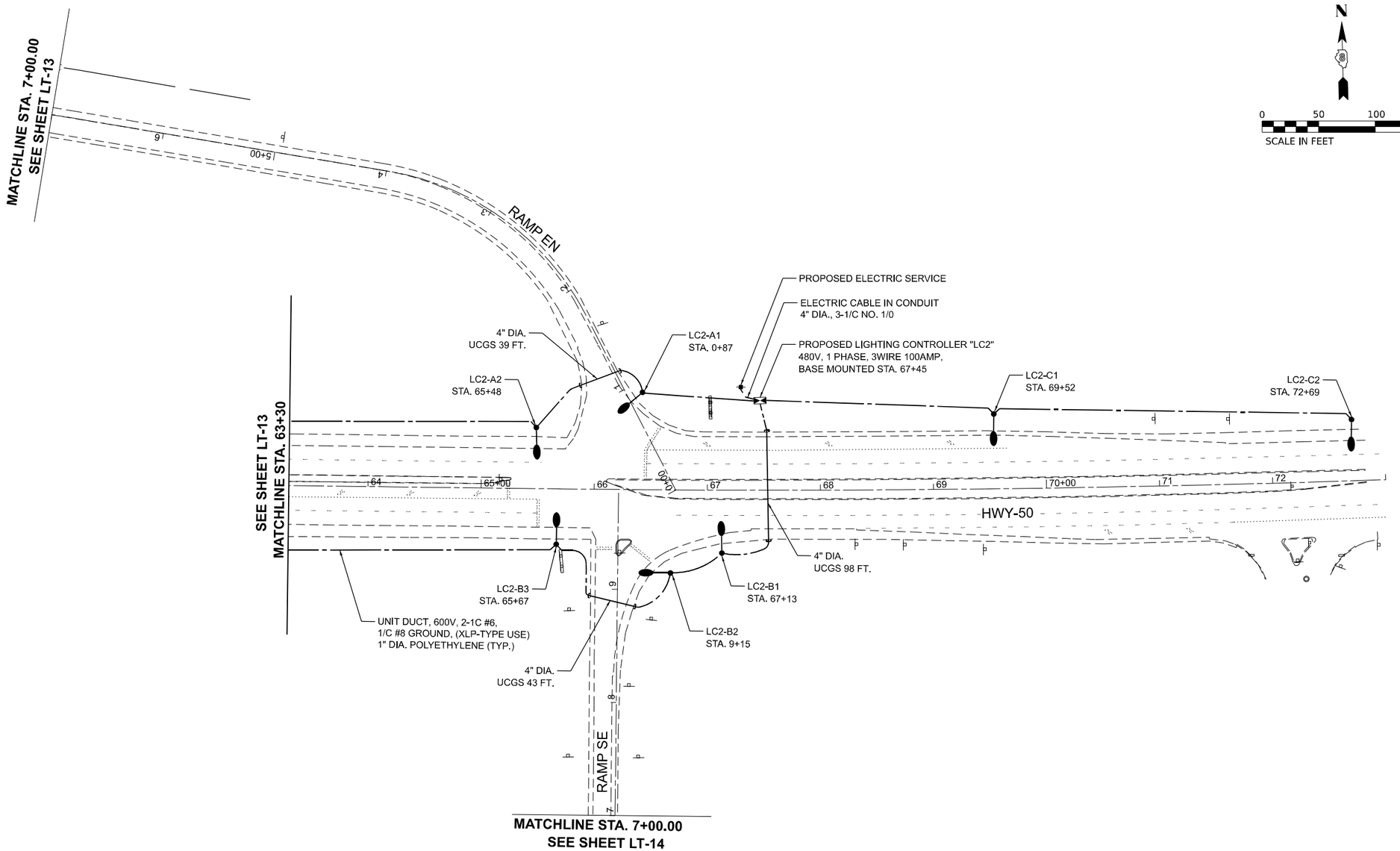

NOTES:

1. FOR GENERAL NOTES AND LEGENDS, SEE SHEET LTN-01.
2. SETBACK IS 21 FT. FROM EDGE OF PAVEMENT TO CENTER OF LIGHT POLE, UNLESS NOTED OTHERWISE.
3. UCGS STANDS FOR UNDERGROUND CONDUIT, GALVANIZED STEEL.

LT–17

MODEL: PLAN 9
FILE NAME: F:\Projects\1089 - VV PH I-II (205-045) - AMES\WO #4\Design\SHI\HWY 50\D876R99-sheet HIGWAY 50 PROPOSED.dgn

AMES Engineering, Inc.
CONSULTING ENGINEERS
6330 Belmont Road, Suite 4B
Downers Grove, IL 60516

USER NAME = msomer	DESIGNED - MH	REVISED -	
	DRAWN - MD/SR	REVISED -	
PLOT SCALE = 0.16666633 ' / In.	CHECKED - BL	REVISED -	
PLOT DATE = 11/12/2024	DATE - 9-13-2024	REVISED -	

STATE OF ILLINOIS
DEPARTMENT OF TRANSPORTATION

PROPOSED LIGHTING PLAN
WEST HIGHWAY 50 & I–64

SCALE: 1"=50' | SHEET 9 OF 9 SHEETS | STA. 59+00 | TO STA. 73+00

F.A.I. RTE.	SECTION	COUNTY	TOTAL SHEETS	SHEET NO.
64	82-(4,5,6,7)-1RS-2	ST. CLAIR	388	324
		CONTRACT NO. 76R99		
	ILLINOIS FED. AID PROJECT			

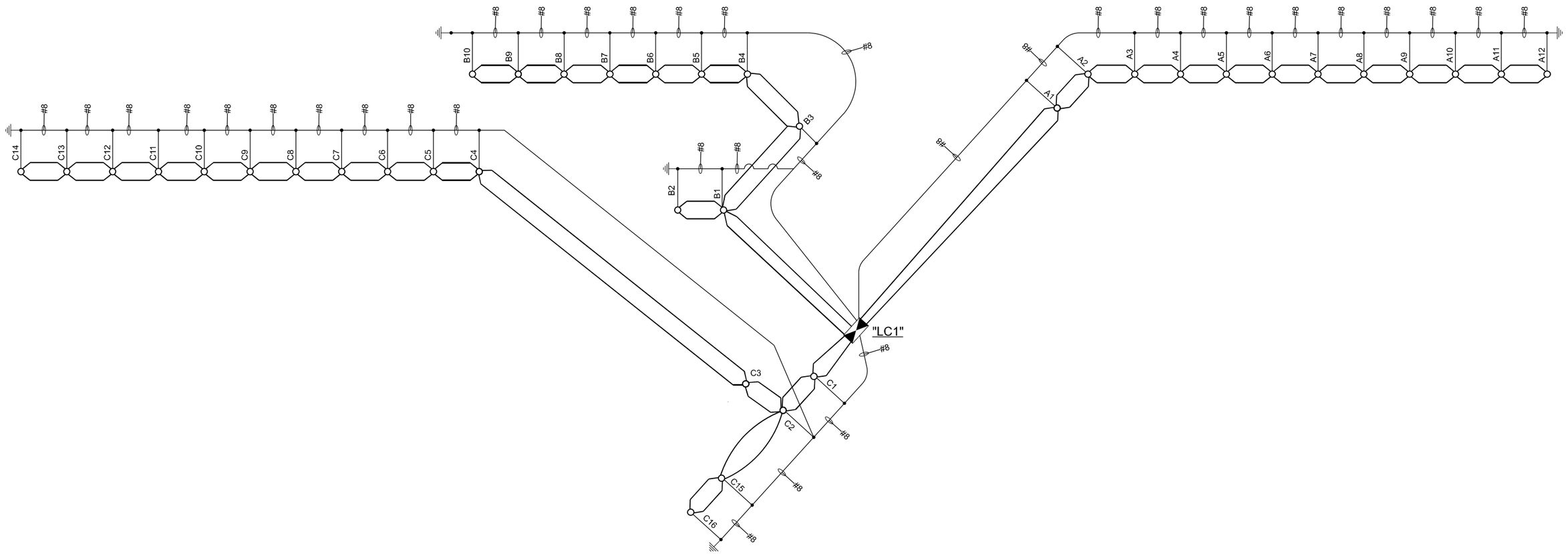

LOAD TABLE LIGHTING CONTROLLER "LC1"

480V, A.C. 1 PHASE, 3 WIRE, 100A WITH 2P BRANCH CIRCUIT BREAKERS

CIRCUIT	TOTAL LUMINAIRES	TOTAL CURRENT IN AMPS	TOTAL WATTAGE
A	12	7.92	3,384
B	10	6.6	2,820
C	16	10.56	4,512
D	SPARE	-	-
E	SPARE	-	-
F	SPARE	-	-
TOTAL	38	25.08	10,716

LEGEND

- PROPOSED LIGHTING CONTROLLER "LC1" 480V, 1 PHASE, 3 WIRE 100 AMP, WITH 20A 2P BRANCH CIRCUIT BREAKERS, BASE MOUNTED
- UNIT DUCT, 600V, 1C NO.6
- PROPOSED LIGHTING UNIT WITH LUMINAIRES OUTPUT DESIGNATION H
- GROUND ROD (AT EACH POLE PER STANDARDS)

AMES Engineering, Inc.
CONSULTING ENGINEERS
6330 Belmont Road, Suite 4B
Downers Grove, IL 60516

USER NAME = msomer	DESIGNED - MH	REVISED -	
	DRAWN - SR	REVISED -	
PLOT SCALE = 0.16666633 ' / in.	CHECKED - BL	REVISED -	
PLOT DATE = 11/12/2024	DATE - 9-13-2024	REVISED -	

STATE OF ILLINOIS
DEPARTMENT OF TRANSPORTATION

WIRING DIAGRAM "LC1"
WEST HIGHWAY 50 & I–64

SCALE: NONE | SHEET OF SHEETS | STA. TO STA.

F.A.I. RTE.	SECTION	COUNTY	TOTAL SHEETS	SHEET NO.
64	82-(4,5,6,7)-1RS-2	ST. CLAIR	388	325
		CONTRACT NO. 76R99		
	ILLINOIS FED. AID PROJECT			

MODEL: LC1 [Sheet]
FILE NAME: F:\Projects\1089 - VV PH I-II (206-045) - AMES\WO #4\Design\Shts\HWY 50\087649\Sheet Wiring Diagram W Highway 50 & I-64 LC1.dgn

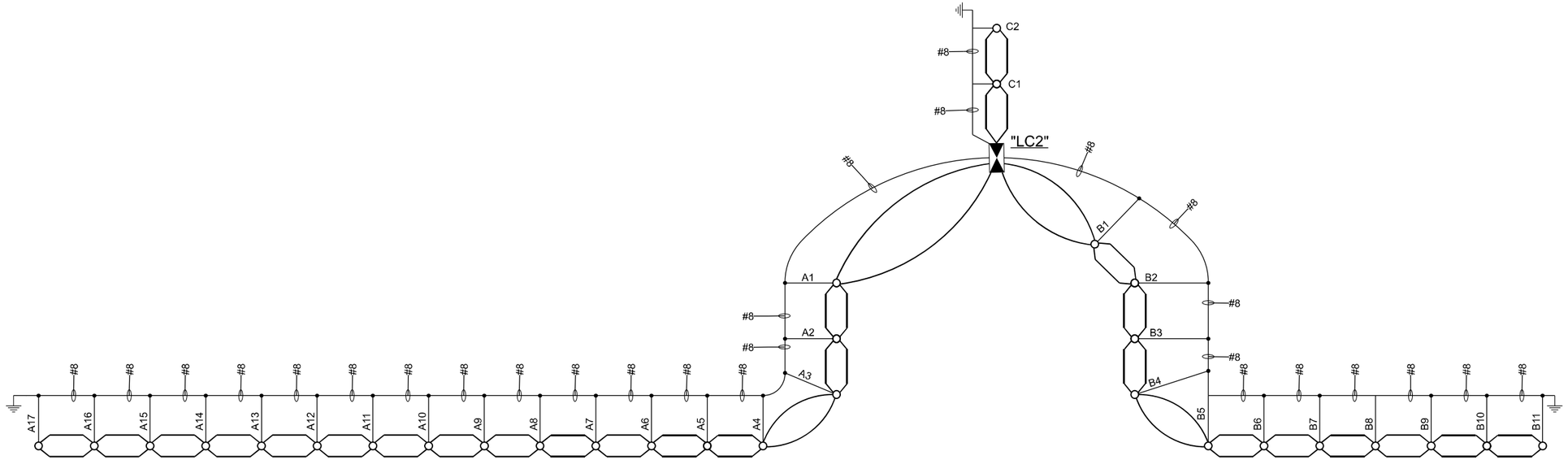

LEGEND

- PROPOSED LIGHTING CONTROLLER "LC2" 480V, 1 PHASE, 3 WIRE 100 AMP, WITH 20A 2P BRANCH CIRCUIT BREAKERS, BASE MOUNTED
- UNIT DUCT, 600V, 1C NO.6
- PROPOSED LIGHTING UNIT WITH LUMINAIRES OUTPUT DESIGNATION H
- GROUND ROD (AT EACH POLE PER STANDARDS)

LOAD TABLE LIGHTING CONTROLLER "LC2"

480V, A.C. 1 PHASE, 3 WIRE, 100A WITH 2P BRANCH CIRCUIT BREAKERS

CIRCUIT	TOTAL LUMINAIRES	TOTAL CURRENT IN AMPS	TOTAL WATTAGE
A	17	11.22	4,794
B	11	7.26	3,102
C	2	1.32	564
D	SPARE	-	-
E	SPARE	-	-
F	SPARE	-	-
TOTAL	30	19.8	8,460

AMES Engineering, Inc.
CONSULTING ENGINEERS
6330 Belmont Road, Suite 4B
Downers Grove, IL 60516

USER NAME = msomer	DESIGNED - MH	REVISED -	
	DRAWN - SR	REVISED -	
PLOT SCALE = 0.16666633 ' / in.	CHECKED - BL	REVISED -	
PLOT DATE = 11/12/2024	DATE - 9-13-2024	REVISED -	

STATE OF ILLINOIS
DEPARTMENT OF TRANSPORTATION

WIRING DIAGRAM "LC2"
WEST HIGHWAY 50 & I–64

SCALE: NONE | SHEET OF SHEETS | STA. TO STA.

F.A.I. RTE.	SECTION	COUNTY	TOTAL SHEETS	SHEET NO.
64	82-(4,5,6,7)-1RS-2	ST. CLAIR	388	326
		CONTRACT NO. 76R99		
	ILLINOIS FED. AID PROJECT			

MODEL: LC1 [Sheet]
FILE NAME: F:\Projects\1089 - VV PH HI (206-045) - AMES\WO #4\Design\Sht\HWY 50\D876899-Sheet Wiring Diagram W Highway 50 & I-64 LC2.dgn

Illinois Department of Transportation

Luminaire Performance Table

Project

Date	Contract Number	Section Number	County
10/25/23	76R99	82-(4,5,6,7)-1R-2	St. Clair

Marked Route Number	Municipality
I-64	O'FALLON

Roadway

Lane Width	# of Lanes	Median Width	I.E.S. Surface Classification	Q-Zero Value
12 FT	4	N/A	R3	0.07

Structure

Mounting Height	Arm Length	Set-Back	Number of Luminaires (Highmast & Sign Lighting Only)
50 FT	15 FT	20 FT	

Luminaire

Description	I.E.S. Lateral Distribution	I.E.S. Vertical Distribution
ROADWAY, OUTPUT DESIGNATION H	TYPE II OR TYPE III	MEDIUM

Total Light Loss Factor (LLF)	B-U-G Rating	Shields	Dimming Protocol
0.7	U=0	N/A	N/A

Layout

Spacing (to Nearest 5 ft)	Configuration (Opposite, Staggered, 1 Sided, or Median)
275 FT	1 SIDED

Performance

Average Illuminance, E_{AVE} (fc)	Uniformity Ratio, E_{AVE}/E_{MIN}
0.9	3

Average Luminance, L_{AVE} (cd/m^2)	Uniformity Ratio, L_{AVE}/L_{MIN}	Uniformity Ratio, L_{MAX}/L_{MIN}	Veiling Luminance Ratio, L_V/L_{AVE}
0.6	3.5	6.0:1	0.3:1

Light Tresspass

Distance to ROW (behind pole)	Max. Horizontal Illuminance at ROW, E_H	Max. Vertical Illuminance at ROW, E_V
N/A	N/A	N/A

Notes

1. Set-Back is from Edge of Pavement (white line) except for sign luminaires when it is vertical and horizontal distance from the sign to the luminaire.
2. Lighting calculations shall be performed with all luminaires oriented toward and perpendicular to the roadway.
3. Total Light Loss Factor (LLF) = the product of "Lumen Maintenance" (LLD) = 0.9, "Dirt Depreciation" (LDD) = 0.8, and "Equipment Factors" (EF) = 0.95.
4. Performance requirements shall be the minimum acceptable standards of photometric performance for the luminaire, based on the given conditions listed above.

Compliance with performance criteria shall be held to one significant digit.

Initial lumens of the proposed luminaire may vary from the values specifies in the table given in Article 1067.06 of the BDE Special Provision for Luminaires, LED

Printed 10/25/23

BDE 5630 (04/10/19)

LT–20

MODEL: Default
FILE NAME: F:\Projects\1089 - VV PH I-II (206-045) - AMES\WO #4\Design\Sht\HWY 50\09876899-sheet Hwy 50- Lum table.dgn

AMES Engineering, Inc.
CONSULTING ENGINEERS
6330 Belmont Road, Suite 4B
Downers Grove, IL 60516

USER NAME = msomer	DESIGNED - MH	REVISED -	
	DRAWN - MD	REVISED -	
PLOT SCALE = 0.100 ' / In.	CHECKED - BL	REVISED -	
PLOT DATE = 11/12/2024	DATE - 9-13-2024	REVISED -	

STATE OF ILLINOIS
DEPARTMENT OF TRANSPORTATION

LUMINAIRE PERFORMANCE TABLE
WEST HIGHWAY 50 AND I–64

SCALE: NONE | SHEET 1 OF 1 SHEETS | STA. | TO STA.

F.A.I. RTE.	SECTION	COUNTY	TOTAL SHEETS	SHEET NO.
64	82-(4,5,6,7)-1RS-2	ST. CLAIR	388	327
		CONTRACT NO. 76R99		
	ILLINOIS	FED. AID PROJECT		

BRIDGE REPAIR PLANS INDEX OF SHEETS

LOCATION 1 - S.N. 082-0307 / LOCATION 2 - S.N. 082-0306 (I-64 OVER IL-157)

1 GENERAL PLAN AND ELEVATION
2-3 STAGING DETAILS
4 OVERLAY PLAN
5-6 TOP OF APPROACH SLAB ELEVATIONS
7 BRIDGE RELIEF JOINT REPAIR DETAILS

LOCATION 3 - S.N. 082-0174 (BUNKUM RD. OVER I-64)

1 GENERAL PLAN AND ELEVATION
2 STAGING DETAILS
3 DECK PATCHES - TOP SIDE
4 FLOOR DRAIN DETAILS
5 ABUTMENT JOINT REPLACEMENT DETAILS
6 JOINT REPLACEMENT AND REPAIR DETAILS
7-8 PREFORMED JOINT STRIP SEAL
9 ABUTMENT REPAIRS
10 BAR SPLICER ASSEMBLY AND MECHANICAL SPLICER DETAILS

LOCATION 4 - S.N. 082-0175 (RUBY LANE OVER I-64)

1 GENERAL PLAN AND ELEVATION
2-3 STAGING DETAILS
4 DECK REPAIR DETAILS
5 FLOOR DRAIN DETAILS
6 JOINT REPLACEMENT DETAILS
7 ABUTMENT REPAIR DETAILS
8 ACCESS PANEL RETROFIT DETAILS

LOCATION 5 - S.N. 082-0176 (IL-159 OVER I-64)

1 GENERAL PLAN AND ELEVATION
2 GENERAL DATA
3-4 STAGING DETAILS
5-6 DECK PATCHES
7 ABUTMENT JOINT REPLACEMENT DETAILS
8 JOINT REPLACEMENT AND REPAIR DETAILS
9 PREFORMED JOINT STRIP SEAL
10 PARAPET REPAIRS
11 ABUTMENT REPAIRS
12 BAR SPLICER ASSEMBLY AND MECHANICAL SPLICER DETAILS

LOCATION 6 - S.N. 082-0308 / LOCATION 7 - S.N. 082-0309 (I-64 OVER OLD COLLINSVILLE RD.)

1 GENERAL PLAN AND ELEVATION
2 STAGING DETAILS
3 DECK PATCHES TOP SIDE
4 BRIDGE RELIEF JOINT REPAIR DETAILS

LOCATION 8 - S.N. 082-0179 (US 50 OVER I-64)

1 GENERAL PLAN AND ELEVATION
2 GENERAL DATA
3-4 STAGING DETAILS
5 DECK REPAIR DETAILS
6 FLOOR DRAIN DETAILS
7-9 JOINT REPLACEMENT DETAILS
10 MODIFIED PREFORMED JOINT STRIP SEAL
11 ABUTMENT REPAIR DETAILS
12 BAR SPLICER ASSEMBLY AND MECHANICAL SPLICER DETAILS

N

SCALE: 1" = 0.5 MI.

0' 0.5 1.0 1.5

FAIRMONT

CASEYVILLE

FAIRVIEW HEIGHTS

Little Canteen Creek

Ogles Creek

Location 1
S.N. 082-0307
I-64 (WB) over IL-157

Location 2
S.N. 082-0306
I-64 (EB) over IL-157

Location 3
S.N. 082-0174
Bunkum Rd. over I-64

Location 4
S.N. 082-0175
Ruby Lane over I-64

Location 5
S.N. 082-0176
IL-159 over I-64

Location 6
S.N. 082-0308
I-64 (EB) over
Old Collinsville Rd.

Location 7
S.N. 082-0309
I-64 (WB) over Old Collinsville Rd.

Location 8
S.N. 082-0179
US 50 over I-64

WILLETT HOFMANN & ASSOCIATES INC
ENGINEERING ARCHITECTURE LAND SURVEYING
809 EAST 2ND STREET, DIXON, IL 61021-0367
T: 815-284-3381 DESIGN FIRM: #184-000918

USER NAME =	DESIGNED - SAB	REVISED -	
	CHECKED - SAB	REVISED -	
PLOT SCALE =	DRAWN - RDA	REVISED -	
PLOT DATE =	CHECKED - SAB	REVISED -	

STATE OF ILLINOIS
DEPARTMENT OF TRANSPORTATION

OVERALL LOCATION MAP
ALL STRUCTURES

F.A.I. RTE.	SECTION	COUNTY	TOTAL SHEETS	SHEET NO.
64	82-(4,5,6,7)-1RS-2	ST. CLAIR	388	328
	WHA# 1155D20	CONTRACT NO. 76R99		
	ILLINOIS	FED. AID PROJECT		

MODEL: Overall Location Map
FILE NAME: S:\PROJECTS\2020\1155D20_IDOT\DB\DESIGN\CAD_SHEETS\WO 11\D876899-Overall Location Map.dgn

11/13/2024 1:37:10 PM

ITEM	UNIT	TOTAL QUANTITY	082-0306 & 0307 (I-64)	082-0174 (BUNKUM RD)	082-0175 (RUBY RD)	082-0176 (IL 159)	082-0308 & 0309 (I-64)	082-0179 (US 50)
STONE RIPRAP, CLASS A4	SQ YD	30		30				
FILTER FABRIC	SQ YD	30		30				
CONCRETE REMOVAL	CU YD	93		9.2		47.2	0.1	36.2
PIPE CULVERT REMOVAL	FOOT	40.0		20.0				20.0
PROTECTIVE SHIELD	SQ YD	6,150		975	891	1,896		2,388
FLOOR DRAINS	EACH	14		4	4		2	4
CONCRETE SUPERSTRUCTURE	CU YD	92		9.2		47.2	0.1	35.1
REINFORCEMENT BARS, EPOXY COATED	POUND	10,160		1,250		2,240		6,670
BAR SPLICERS	EACH	116		12		48		56
PREFORMED JOINT STRIP SEAL	FOOT	576		116		219		241
STEEL FLARED END SECTIONS 12"	EACH	2		1				1
PIPE DRAINS 12"	FOOT	40		20				20
REMOVE AND REERECT TRAFFIC BARRIER TERMINALS, TYPE 6	EACH	2	2					
MOBILIZATION	L SUM	1	0.2	0.2	0.2	0.2	0.1	0.1
TEMPORARY CONCRETE BARRIER	FOOT	2,013			375	700		938
RELOCATE TEMPORARY CONCRETE BARRIER	FOOT	2,013			375	700		938

REV - MS

	ITEM	UNIT	TOTAL QUANTITY	082-0306 & 0307 (I-64)	082-0174 (BUNKUM RD)	082-0175 (RUBY RD)	082-0176 (IL 159)	082-0308 & 0309 (I-64)	082-0179 (US 50)
*	BRIDGE DECK LATEX CONCRETE OVERLAY, 2 3/4 INCHES	SQ YD	2,868						2,868
*	BRIDGE DECK LATEX CONCRETE OVERLAY, 3 1/4 INCHES	SQ YD	2,042				2,042		
*	CONTAINMENT AND DISPOSAL OF LEAD PAINT CLEANING RESIDUES NO. 8	L SUM	1						1
*	REMOVING AND RE-ERECTING EXISTING RAILING	FOOT	157		77				80
*	CLEANING AND PAINTING STEEL BRIDGE NO. 3	L SUM	1		1				
*	CLEANING AND PAINTING STEEL BRIDGE NO. 4	L SUM	1			1			
*	CLEANING AND PAINTING STEEL BRIDGE NO. 5	L SUM	1				1		
*	CLEANING AND PAINTING STEEL BRIDGE NO. 8	L SUM	1						1
*	BRIDGE DECK SCARIFICATION 2 1/2"	SQ YD	2,868						2,868
*	BRIDGE DECK SCARIFICATION 3"	SQ YD	2,042				2,042		
*	STRUCTURAL REPAIR OF CONCRETE (DEPTH EQUAL TO OR LESS THAN 5 INCHES)	SQ FT	2,785		165	1,312	508		800
*	STRUCTURAL REPAIR OF CONCRETE (DEPTH GREATER THAN 5 INCHES)	SQ FT	341		30	100	51		160
*	CONCRETE PAVEMENT SCARIFICATION	SQ YD	946	946					
*	DECK SLAB REPAIR (FULL DEPTH, TYPE I)	SQ YD	121		5	16	29		71
*	DECK SLAB REPAIR (FULL DEPTH, TYPE II)	SQ YD	172		5	15	52		100
*	DECK SLAB REPAIR (PARTIAL)	SQ YD	90	10	30	30		20	

*SEE SPECIAL PROVISIONS

WILLETT HOFMANN & ASSOCIATES INC
ENGINEERING ARCHITECTURE LAND SURVEYING
809 EAST 2ND STREET, DIXON, IL 61021-0367
T: 815-284-3381 DESIGN FIRM: #184-000918

USER NAME =	DESIGNED - SAB	REVISED -
	CHECKED - SAB	REVISED -
PLOT SCALE =	DRAWN - RDA	REVISED -
PLOT DATE =	CHECKED - SAB	REVISED -

STATE OF ILLINOIS
DEPARTMENT OF TRANSPORTATION

BILL OF MATERIALS
ALL STRUCTURES
SHEET 2 OF 3 SHEETS

F.A.I. RTE.	SECTION	COUNTY	TOTAL SHEETS	SHEET NO.
64	82-(4,5,6,7)-1RS-2	ST. CLAIR	388	330
	WHA# 1155D20	CONTRACT NO. 76R99		
	ILLINOIS	FED. AID PROJECT		

	ITEM	UNIT	TOTAL QUANTITY	082-0306 & 0307 (I-64)	082-0174 (BUNKUM RD)	082-0175 (RUBY RD)	082-0176 (IL 159)	082-0308 & 0309 (I-64)	082-0179 (US 50)
*	SILICONE JOINT SEALER, 2.75"	FOOT	92			92			
*	DIAMOND GRINDING (BRIDGE SECTION)	SQ YD	4,718				1,990		2,728
*	TEMPORARY SHORING AND CRIBBING	EACH	2			2			
*	ACRYLIC COATING	SQ YD	35				35		
*	CLEAN & RESEAL RELIEF JOINT	FOOT	419	286				133	
*	BRIDGE DECK GROOVING (LONGITUDINAL)	SQ YD	3,912				1,825		2,087
*	CLEANING AND PAINTING EXPOSED REBAR	L SUM	4		1	1	1		1
*	BRIDGE DECK CONCRETE SEALER	SQ FT	137,552	28,090	15,950	12,350	19,479	30,688	30,995
*	ABUTMENT VAULT DOOR RETROFIT	EACH	2		1	1			

*SEE SPECIAL PROVISIONS

MODEL: Summary of Quantities
FILE NAME: S:\PROJECTS\2020\1155D20_IDOT\DB\DESIGN\CAD_SHEETS\WO 11\D876R99-Summary of Quantities.dgn

11/13/2024 1:37:22 PM

WILLETT HOFMANN & ASSOCIATES INC
ENGINEERING ARCHITECTURE LAND SURVEYING
809 EAST 2ND STREET, DIXON, IL 61021-0367
T: 815-284-3381 DESIGN FIRM: #184-000918

USER NAME =	DESIGNED - SAB	REVISED -
	CHECKED - SAB	REVISED -
PLOT SCALE =	DRAWN - RDA	REVISED -
PLOT DATE =	CHECKED - SAB	REVISED -

STATE OF ILLINOIS
DEPARTMENT OF TRANSPORTATION

BILL OF MATERIALS
ALL STRUCTURES
SHEET 3 OF 3 SHEETS

F.A.I. RTE.	SECTION	COUNTY	TOTAL SHEETS	SHEET NO.
64	82-(4,5,6,7)-1RS-2	ST. CLAIR	388	331
	WHA# 1155D20	CONTRACT NO. 76R99		
	ILLINOIS	FED. AID PROJECT		

EXISTING STRUCTURE: S.N. 082-0306 (E.B.) & S.N. 082-0307 (W.B.): Built as F.A.I. Route 64 Sec. 82-(4,5,6,7)-IR in 2007. The existing structure is a two span reinforced concrete deck composite on continuous steel plate girders. The structures are 176'-0¾" Back to Back and 73'-2" Out to Out of Parapets. Traffic maintained utilizing staged construction.

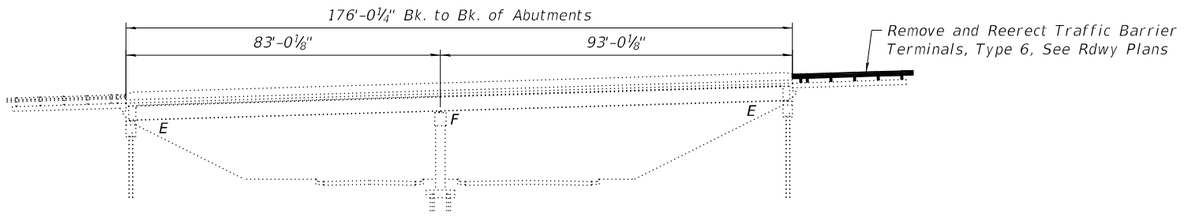

W. ABUT. PIER E. ABUT.

ELEVATION VIEW

INDEX OF SHEETS LOCATIONS 1 & 2

1 General Plan and Elevation
2-3 Staging Details
4 Overlay Plan
5-6 Top of Approach Slab Elevations
7 Bridge Relief Joint Repair Details

TOTAL BILL OF MATERIAL - S.N. 082-0306 & S.N. 082-0307

	ITEM	UNIT	SUPER	SUB	TOTAL
	Remove and Erect Traffic Barrier Terminal, Type 6	Each	2	———	2
*	Concrete Pavement Scarification	Sq. Yd.	946	———	946
*	Deck Slab Repair (Partial)	Sq. Yd.	10	———	10
*	Clean & Reseal Relief Joint	Foot	286	———	286
*	Bridge Deck Concrete Sealer	Sq. Ft.	28,090	———	28,090

* See Special Provisions

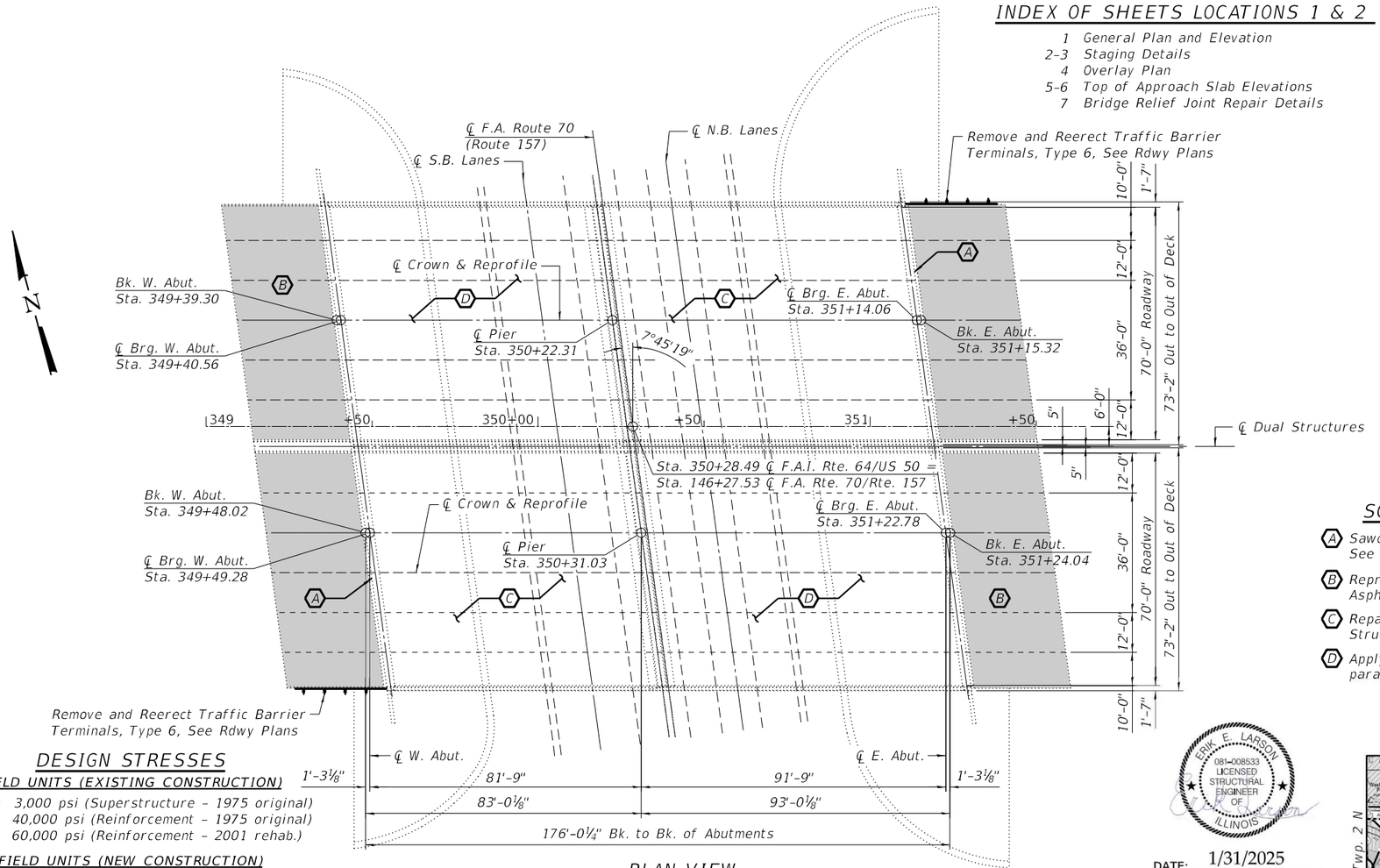

PLAN VIEW

GENERAL NOTES:

The structures will retain the same numbers: 082-0306 & 082-0307.

Two way traffic shall be maintained during rehabilitation of existing structure.

The existing structural steel coating contains lead. The Contractor shall take appropriate precautions to deal with the presence of lead on this project.

Repair dimensions and locations shown are estimates and will be determined by the Engineer in the field.

Deck slab repair (partial) is a contingency pay item. If required, the limits shall be determined by the Engineer in field.

Plan dimensions and details relative to the existing structure have been taken from existing plans are Subject to nominal construction variations. The contractor shall field verify existing dimensions and details affecting new construction and make necessary approved adjustments prior to construction or ordering of materials. Such variations shall not be cause for additional compensation for a change in scope of the work, however, the contractor will be paid for the quantity actually furnished at the unit price bid for the work.

Bridge deck concrete sealer includes the top of decks, and the front faces and tops of curbs and parapets.

SCOPE OF WORK:

(A) Sawcut existing end of deck openings and Clean and Seal Relief Joint. See Structural Sheet 7 of 7.

(B) Reprofile approaches to bridge: Perform Concrete Surface Removal and install a Hot-Mix Asphalt Overlay, Variable Depth. See Roadway plans and Structural Sheets 5-7.

(C) Repair deteriorated deck top of slab areas - Deck Slab Repair (Partial). See Structural Sheets 4 of 7.

(D) Apply Bridge Deck Concrete Sealer to top surface of deck, and inside and top faces of parapets (including parapets and median over approach slabs).

DESIGN STRESSES

FIELD UNITS (EXISTING CONSTRUCTION)

f'c = 3,000 psi (Superstructure - 1975 original)
fy = 40,000 psi (Reinforcement - 1975 original)
fy = 60,000 psi (Reinforcement - 2001 rehab.)

FIELD UNITS (NEW CONSTRUCTION)

f'c = 4,000 psi
fy = 60,000 psi (Reinforcement)

LOADING HS20-44

Allow 50#/sq. ft. for future wearing surface.

ERIK E. LARSON
081-008533
LICENSED STRUCTURAL ENGINEER OF ILLINOIS

DATE: 1/31/2025
EXPIRES 11/30/26

DESIGN SPECIFICATIONS

2002 AASHTO Bridge Design Specifications, 17th Ed. (Original)

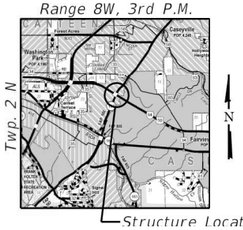

LOCATION SKETCH

GENERAL PLAN AND ELEVATION
F.A.I ROUTE 64 OVER IL 157
SEC. 82-(4,5,6,7)-1RS-2
ST. CLAIR COUNTY
STATION 350+28.49
S.N. 082-0306 (EB) & S.N. 082-0307 (WB)

WILLETT HOFMANN & ASSOCIATES INC
ENGINEERING ARCHITECTURE LAND SURVEYING
809 EAST 2ND STREET, DIXON, IL 61021-0367
T: 815-284-3381 DESIGN FIRM: #184-000918

USER NAME =	DESIGNED - SAB	REVISED -	
	CHECKED - DCB	REVISED -	
PLOT SCALE =	DRAWN - FDL	REVISED -	
PLOT DATE =	CHECKED - SAB	REVISED -	

STATE OF ILLINOIS
DEPARTMENT OF TRANSPORTATION

STRUCTURAL SHEET 1 OF 7 SHEETS

F.A.I. RTE.	SECTION	COUNTY	TOTAL SHEETS	SHEET NO.
64	82-(4,5,6,7)-1RS-2	ST. CLAIR	388	332
	WHA# 1155D20	CONTRACT NO. 76R99		
	ILLINOIS	FED. AID PROJECT		

MODEL: GPE
FILE NAME: S:\PROJECTS\2020\1155D20_IDOT\08\DESIGN\CAD_SHEETS\WO 11\08202306+0307\08202306+0307+D876R99+001+GPE.dgn
2/5/2025 1:06:38 PM

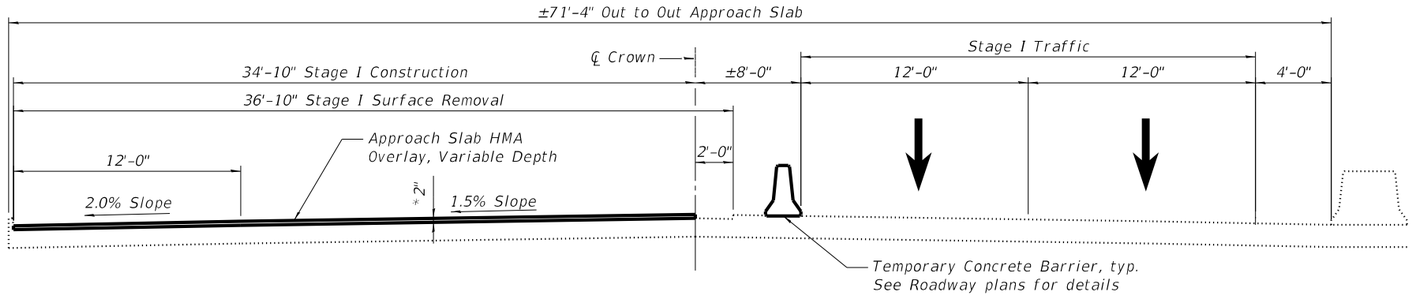

WESTBOUND CROSS SECTION - STAGE I CONSTRUCTION

Surface removal and HMA overlay - Approach Slabs only. See Roadway Plans
(Looking East)

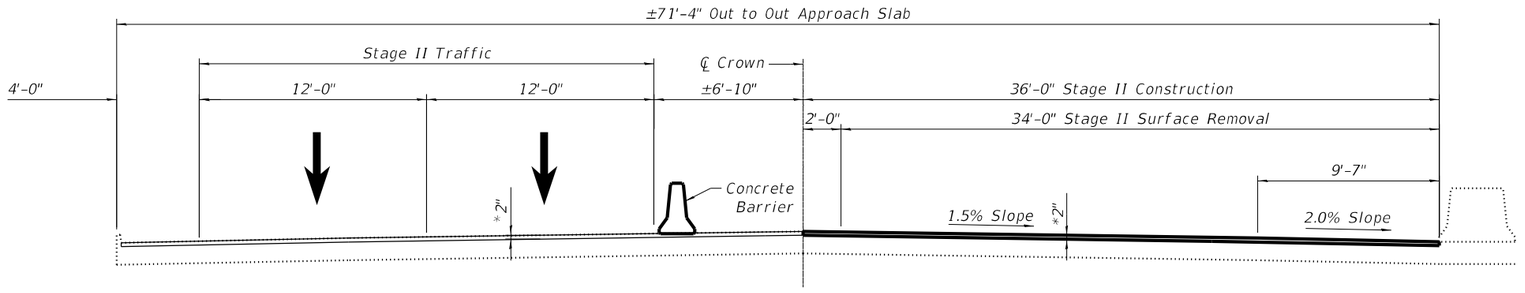

WESTBOUND CROSS SECTION - STAGE II CONSTRUCTION

Surface removal and HMA overlay - Approach Slabs only. See Roadway Plans
(Looking East)

NOTES:

*Approach slab Hot-Mix Asphalt Overlay, Variable Depth Quantity is included in the Roadway HMA Resurfacing Quantities.

See Structural Sheet 4 of 7 for overlay limits.

MODEL: Staging Details
FILE NAME: S:\PROJECTS\2020\1155D20_IDOT\08\DESIGN\CAD_SHEETS\WO 11\08202306-0307\08202306-0307-D876f99-002-003-StgDtls.dgn

11/13/2024 1:37:26 PM

WILLETT HOFMANN & ASSOCIATES INC
ENGINEERING ARCHITECTURE LAND SURVEYING
809 EAST 2ND STREET, DIXON, IL 61021-0367
T: 815-284-3381 DESIGN FIRM: #184-000918

USER NAME =	DESIGNED - SAB	REVISED -	
	CHECKED - DCB	REVISED -	
PLOT SCALE =	DRAWN - TJA	REVISED -	
PLOT DATE =	CHECKED - SAB	REVISED -	

STATE OF ILLINOIS
DEPARTMENT OF TRANSPORTATION

STAGING DETAILS - WESTBOUND APPROACH SLAB
S.N. 082-0306 (EB) & S.N. 082-0307 (WB)
STRUCTURAL SHEET 2 OF 7 SHEETS

F.A.I. RTE.	SECTION	COUNTY	TOTAL SHEETS	SHEET NO.
64	82-(4,5,6,7)-1RS-2	ST. CLAIR	388	333
	WHA# 1155D20	CONTRACT NO. 76R99		
	ILLINOIS	FED. AID PROJECT		

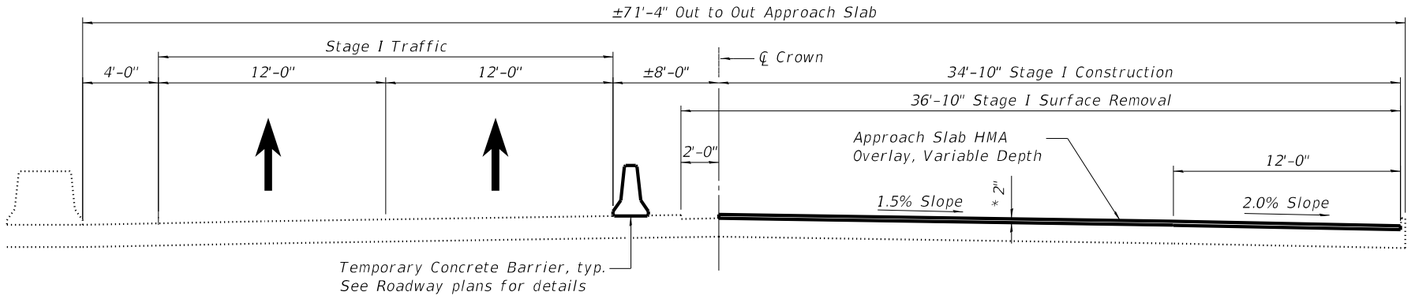

EASTBOUND CROSS SECTION - STAGE I CONSTRUCTION

Surface removal and HMA overlay - Approach Slabs only. See Roadway Plans
(Looking East)

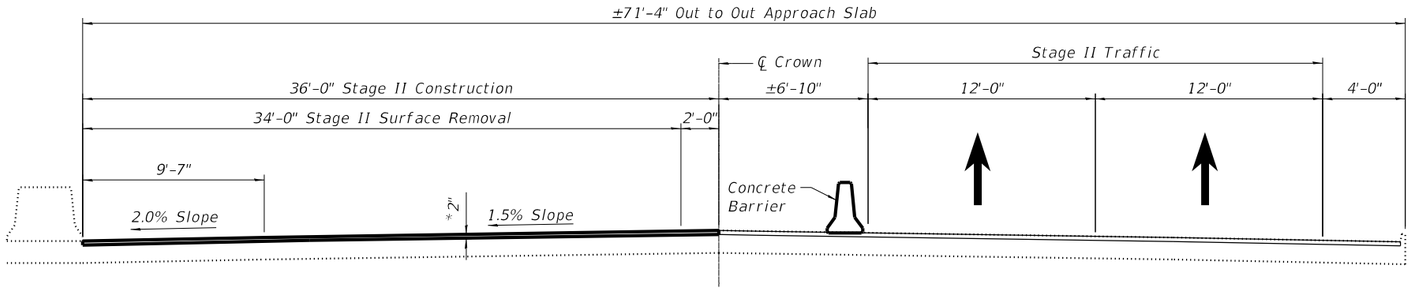

EASTBOUND CROSS SECTION - STAGE II CONSTRUCTION

Surface removal and HMA overlay - Approach Slabs only. See Roadway Plans
(Looking East)

NOTES:

* *Approach slab Hot-Mix Asphalt Overlay, Variable Depth Quantity is included in the Roadway HMA Resurfacing Quantities.*

See Structural Sheet 4 of 7 for overlay limits.

MODEL: Staging Details
FILE NAME: S:\PROJECTS\2020\1155D20_IDOT\08\DESIGN\CAD_SHEETS\WO 11\08203O6-0307\08203O6-0307-D876R99-002-003-StgDtls.dgn

11/13/2024 1:37:26 PM

WILLETT HOFMANN & ASSOCIATES INC
ENGINEERING ARCHITECTURE LAND SURVEYING
809 EAST 2ND STREET, DIXON, IL 61021-0367
T: 815-284-3381 DESIGN FIRM: #184-000918

USER NAME =	DESIGNED - SAB	REVISED -
	CHECKED - DCB	REVISED -
PLOT SCALE =	DRAWN - TJA	REVISED -
PLOT DATE =	CHECKED - SAB	REVISED -

STATE OF ILLINOIS
DEPARTMENT OF TRANSPORTATION

STAGING DETAILS - EASTBOUND APPROACH SLAB
S.N. 082-0306 (EB) & S.N. 082-0307 (WB)
STRUCTURAL SHEET 3 OF 7 SHEETS

F.A.I. RTE.	SECTION	COUNTY	TOTAL SHEETS	SHEET NO.
64	82-(4,5,6,7)-1RS-2	ST. CLAIR	388	334
	WHA# 1155D20	CONTRACT NO. 76R99		
	ILLINOIS	FED. AID PROJECT		

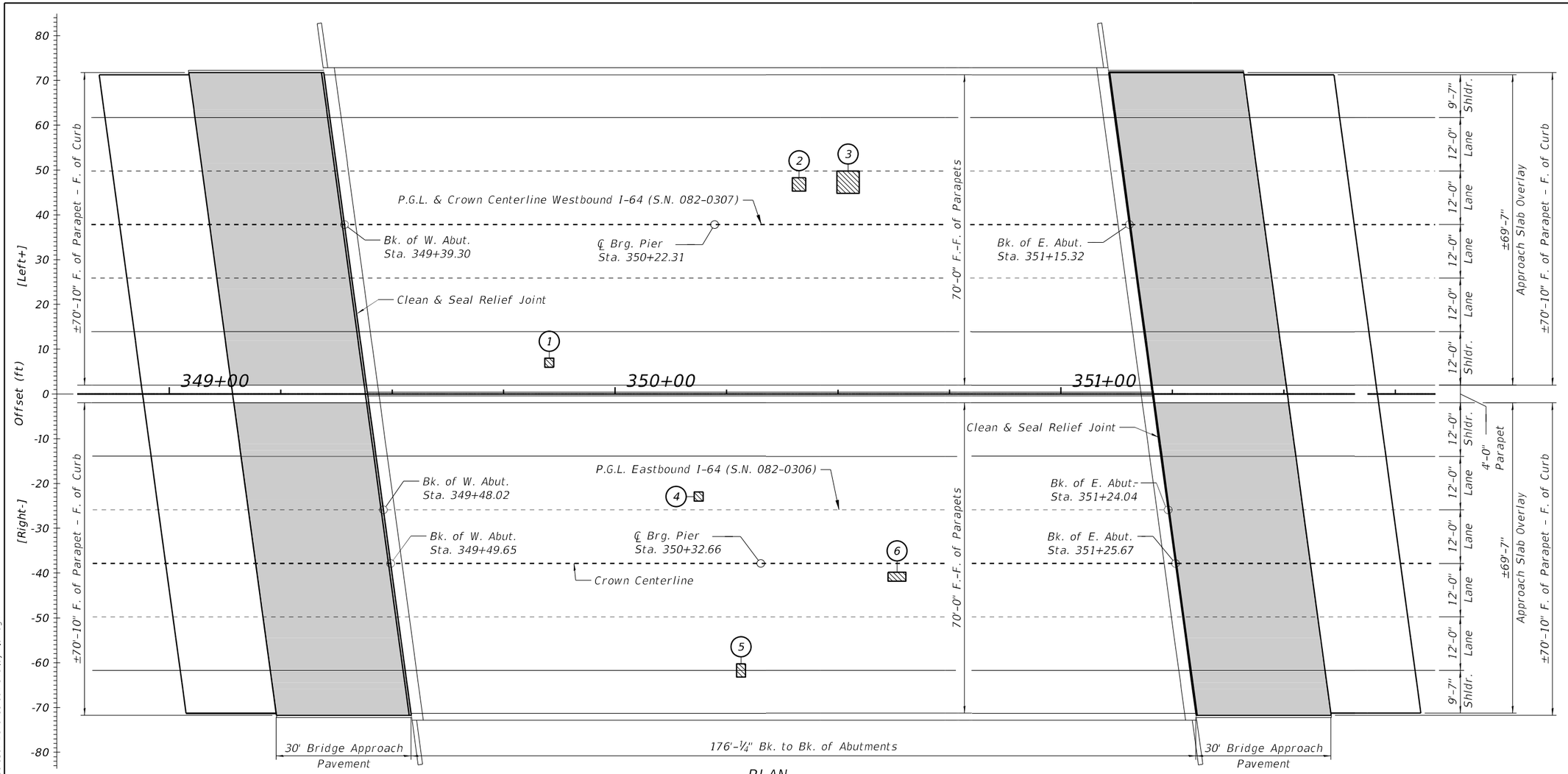

PLAN

LEGEND

Deck Slab Repair (Partial) 5 Sq. Yd.

HMA Overlay, Variable Depth

DECK PATCHES – S.N. 082-0307 (WB)

Patch #	Start Sta	End Sta	Offsets (ft) From	Offsets (ft) To	Length (ft.)	Width (ft.)	Area (sy)	Full or Partial Depth
1	349+84	349+86	30 Rt	32 Rt	2	2	0.44	P
2	350+40	350+43	7.5 Lt	10.5 Lt	3	3	1.00	P
3	350+46	350+48	7 Lt	12 Lt	2	5	1.11	P

DECK PATCHES – S.N. 082-0306 (EB)

Patch #	Start Sta	End Sta	Offsets (ft) From	Offsets (ft) To	Length (ft.)	Width (ft.)	Area (sy)	Full or Partial Depth
4	350+18	350+20	2 Lt	4 Lt	2	2	0.44	P
5	350+27	350+29	34.5 Rt	37.5 Rt	2	3	0.67	P
6	350+61	350+65	14 Rt	16 Rt	4	2	0.89	P

NOTES:

See Structural Sheets 5 & 6 of 7 for approach slab overlay details.

* See Special Provision.

** The areas of deck repairs are estimated. The deck survey and schedule shows 5 sq. yds. of Deck Slab Repairs (Partial). Plan quantities have been increased (to 10 sq. yds.)

The Engineer shall show actual patch locations on as-built plans.

Deck Survey 10-10-23.

Deck Slab Repair (Partial) is a contingency pay item. If required, the limits shall be determined by the Engineer in field.

*** Bridge Deck Concrete Sealer includes the top of decks, and the front faces and tops of curbs and parapets.

BILL OF MATERIAL – S.N. 082-0307 (WB)

	ITEM	UNIT	TOTAL
*	Concrete Pavement Scarification	Sq. Yd.	473
**	Deck Slab Repair (Partial)	Sq. Yd.	5
***	Bridge Deck Concrete Sealer	Sq. Ft.	14,045
*	Clean & Seal Relief Joint	Foot	143

BILL OF MATERIAL – S.N. 082-0306 (EB)

	ITEM	UNIT	TOTAL
*	Concrete Pavement Scarification	Sq. Yd.	473
**	Deck Slab Repair (Partial)	Sq. Yd.	5
***	Bridge Deck Concrete Sealer	Sq. Ft.	14,045
*	Clean & Seal Relief Joint	Foot	143

WILLETT HOFMANN & ASSOCIATES INC
ENGINEERING ARCHITECTURE LAND SURVEYING
809 EAST 2ND STREET, DIXON, IL 61021-0367
T: 815-284-3381 DESIGN FIRM: #184-000918

USER NAME =	DESIGNED - SAB	REVISED -
	CHECKED - DCB	REVISED -
PLOT SCALE =	DRAWN - RDA	REVISED -
PLOT DATE =	CHECKED - DCB	REVISED -

STATE OF ILLINOIS
DEPARTMENT OF TRANSPORTATION

OVERLAY PLAN
S.N. 082-0306 (EB) & S.N. 082-0307 (WB)
STRUCTURAL SHEET 4 OF 7 SHEETS

F.A.I. RTE.	SECTION	COUNTY	TOTAL SHEETS	SHEET NO.
64	82-(4,5,6,7)-1RS-2	ST. CLAIR	388	335
	WHA# 1155D20	CONTRACT NO. 76R99		
	ILLINOIS FED. AID PROJECT			

MODEL: Overlay Plan
FILE NAME: S:\PROJECTS\2020\1155D20_IDOTDB\DESIGN\CAD_SHEETS\WO 1\10820306-0307\0820306-0307-0876R99-004-Overlay Plan.dgn
11/13/2024 1:37:26 PM

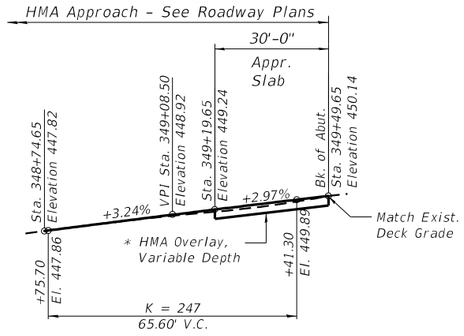

PROFILE GRADE AT WEST APPROACH E.B.

* Min. thickness 2 inches

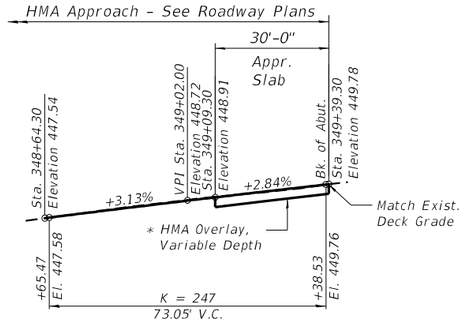

PROFILE GRADE AT WEST APPROACH W.B.

* Min. thickness 2 inches

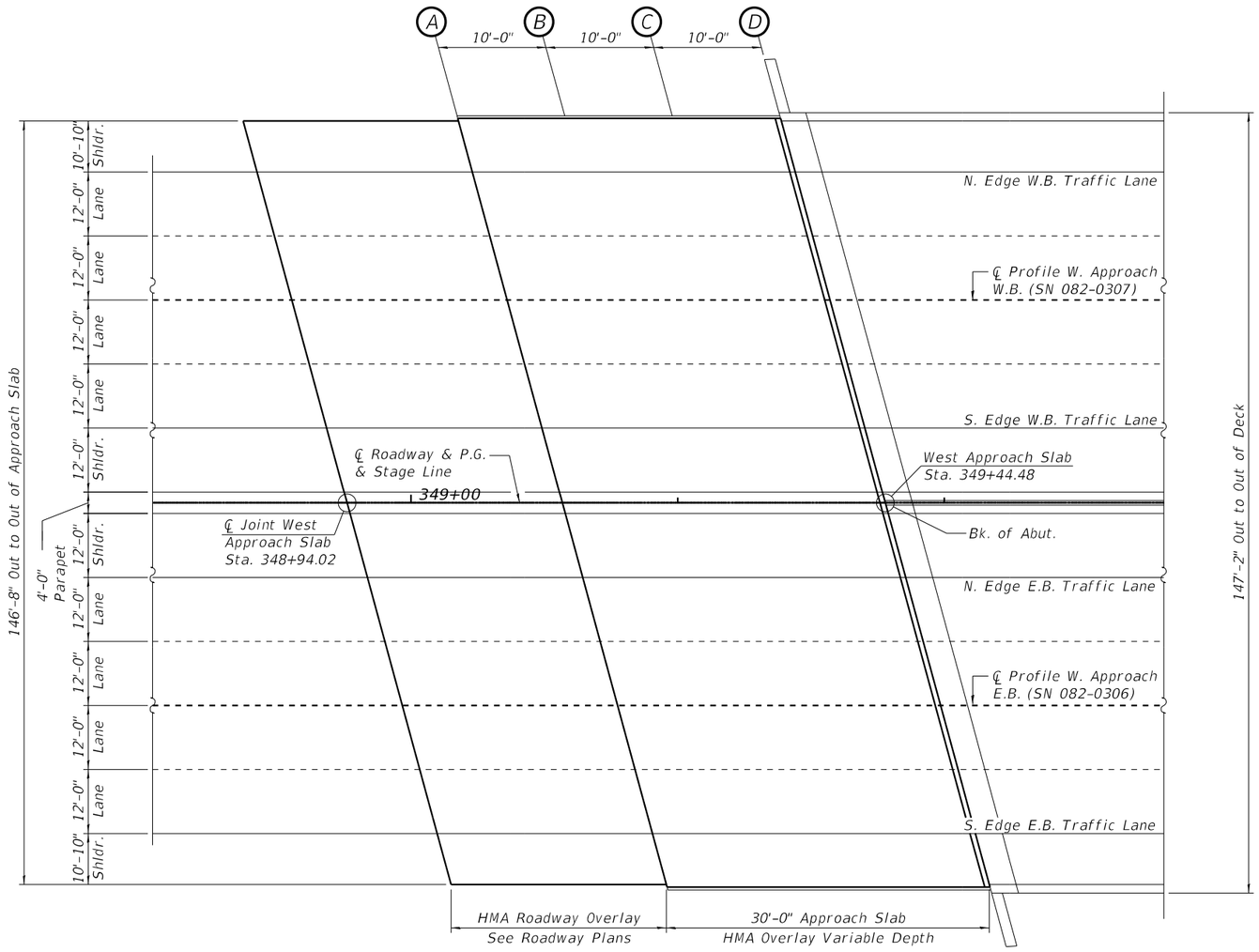

PLAN VIEW

NORTH EDGE W.B. TRAFFIC LANE (S.N. 082-0307)

Location	Station	Offset from Crown	Existing Grade	Proposed Grade	Grade Adjustment (ft)
A	349+06.03	24.00	448.50	448.46	-0.04
B	349+16.03	24.00	448.73	448.76	0.03
C	349+26.03	24.00	448.99	449.05	0.06
D	349+36.03	24.00	449.33	449.33	0.00

CENTERLINE OF W.B. TRAFFIC LANE (S.N. 082-0307)

Location	Station	Offset from Crown	Existing Grade	Proposed Grade	Grade Adjustment (ft)
A	349+09.30	0.00	448.97	448.93	-0.04
B	349+19.30	0.00	449.20	449.23	0.03
C	349+29.30	0.00	449.46	449.52	0.06
D	349+39.30	0.00	449.80	449.80	0.00

SOUTH EDGE OF W.B. TRAFFIC LANE (S.N. 082-0307)

Location	Station	Offset from Crown	Existing Grade	Proposed Grade	Grade Adjustment (ft)
A	349+12.57	24.00	448.50	448.46	-0.04
B	349+22.57	24.00	448.73	448.76	0.03
C	349+32.57	24.00	448.99	449.05	0.06
D	349+42.57	24.00	449.33	449.33	0.00

NORTH EDGE E.B. TRAFFIC LANE (S.N. 082-0306)

Location	Station	Offset from Crown	Existing Grade	Proposed Grade	Grade Adjustment (ft)
A	349+16.38	24.00	448.63	448.79	0.16
B	349+26.38	24.00	448.91	449.09	0.18
C	349+36.38	24.00	449.25	449.39	0.14
D	349+46.38	24.00	449.69	449.69	0.00

CENTERLINE OF E.B. TRAFFIC LANE (S.N. 082-0306)

Location	Station	Offset from Crown	Existing Grade	Proposed Grade	Grade Adjustment (ft)
A	349+19.65	0.00	449.10	449.26	0.16
B	349+29.65	0.00	449.38	449.56	0.18
C	349+39.65	0.00	449.72	449.86	0.14
D	349+49.65	0.00	450.16	450.1	0.00

SOUTH EDGE OF E.B. TRAFFIC LANE (S.N. 082-0306)

Location	Station	Offset from Crown	Existing Grade	Proposed Grade	Grade Adjustment (ft)
A	349+22.92	24.00	448.63	448.79	0.16
B	349+32.92	24.00	448.91	449.09	0.18
C	349+42.92	24.00	449.25	449.39	0.14
D	349+52.92	24.00	449.69	449.69	0.00

WILLETT HOFMANN & ASSOCIATES INC
ENGINEERING ARCHITECTURE LAND SURVEYING
809 EAST 2ND STREET, DIXON, IL 61021-0367
T: 815-284-3381 DESIGN FIRM: #184-000918

USER NAME =	DESIGNED - SAB	REVISED -	
	CHECKED - DCB	REVISED -	
PLOT SCALE =	DRAWN - RDA	REVISED -	
PLOT DATE =	CHECKED - DCB	REVISED -	

STATE OF ILLINOIS
DEPARTMENT OF TRANSPORTATION

TOP OF WEST APPROACH SLAB ELEVATIONS
S.N. 082-0306 (EB) & S.N. 082-0307 (WB)
STRUCTURAL SHEET 5 OF 7 SHEETS

F.A.I. RTE.	SECTION	COUNTY	TOTAL SHEETS	SHEET NO.
64	82-(4,5,6,7)-1RS-2	ST. CLAIR	388	336
	WHA# 1155D20	CONTRACT NO. 76R99		
	ILLINOIS	FED. AID PROJECT		

MODEL: Top of Approach Slab Elevations
FILE NAME: S:\PROJECTS\2020\1155D20_IDOTD8\DESIGN\CAD_SHEETS\WO 11\08220306-0307\08220306-0307-09876R99-005-006-Top of Approach Slab Elevations.dgn
11/13/2024 1:37:27 PM

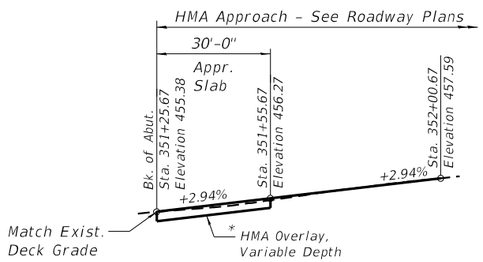

PROFILE GRADE AT EAST APPROACH E.B.

* Min. thickness 2 inches

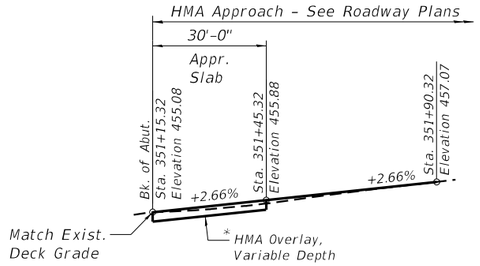

PROFILE GRADE AT EAST APPROACH W.B.

* Min. thickness 2 inches

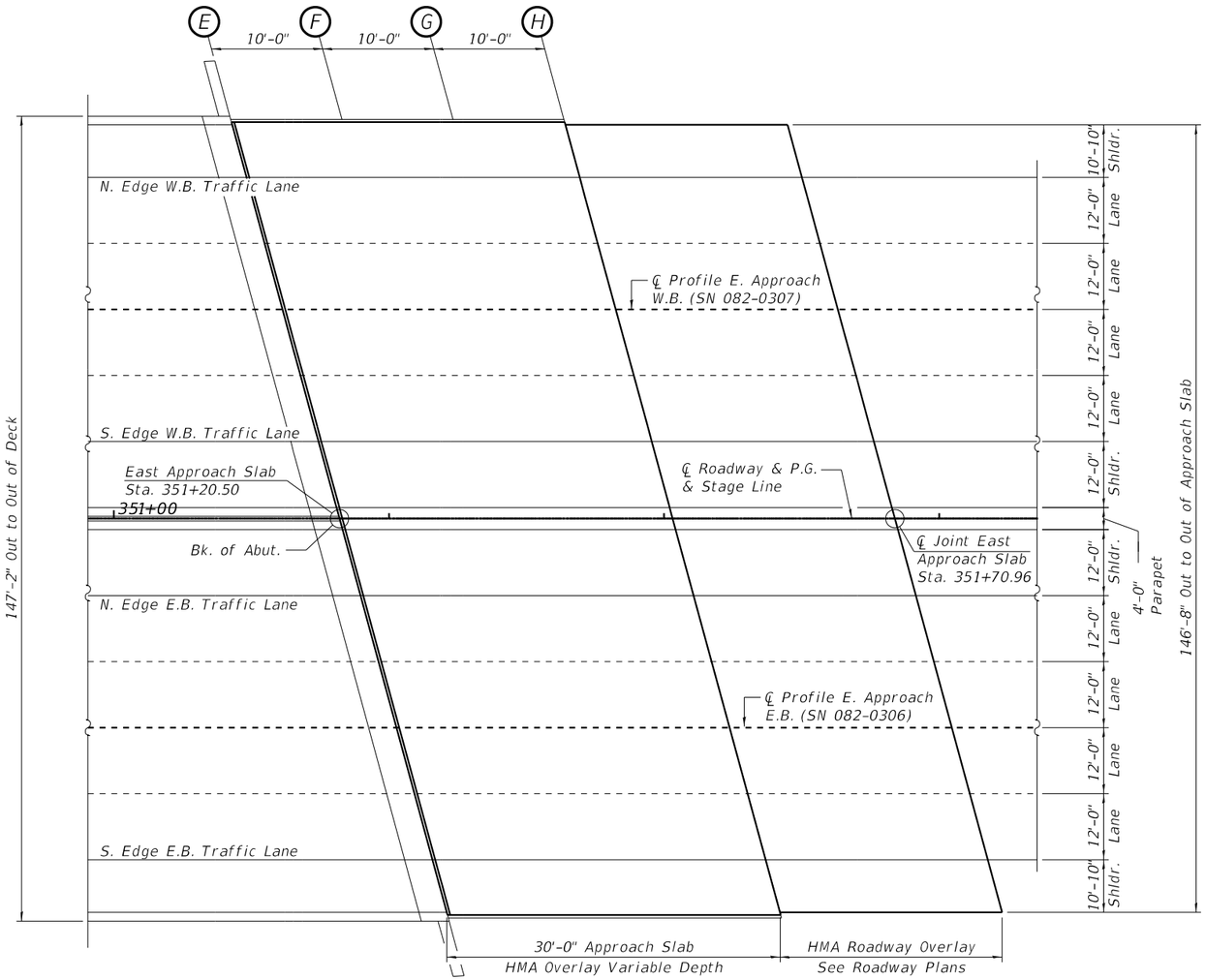

PLAN VIEW

NORTH EDGE W.B. TRAFFIC LANE (S.N. 082-0307)

Location	Station	Offset from Crown	Existing Grade	Proposed Grade	Grade Adjustment (ft)
E	351+12.05	24.00	454.63	454.63	0.00
F	351+22.05	24.00	454.73	454.89	0.16
G	351+32.05	24.00	454.94	455.16	0.22
H	351+42.05	24.00	455.18	455.43	0.25

CENTERLINE OF W.B. TRAFFIC LANE (S.N. 082-0307)

Location	Station	Offset from Crown	Existing Grade	Proposed Grade	Grade Adjustment (ft)
E	351+15.32	0.00	455.10	455.10	0.00
F	351+25.32	0.00	455.20	455.36	0.16
G	351+35.32	0.00	455.41	455.65	0.22
H	351+45.32	0.00	455.65	455.90	0.25

SOUTH EDGE OF W.B. TRAFFIC LANE (S.N. 082-0307)

Location	Station	Offset from Crown	Existing Grade	Proposed Grade	Grade Adjustment (ft)
E	351+18.59	24.00	454.63	454.63	0.00
F	351+28.59	24.00	454.73	454.89	0.16
G	351+38.59	24.00	454.94	455.16	0.22
H	351+48.59	24.00	455.18	455.43	0.25

NORTH EDGE E.B. TRAFFIC LANE (S.N. 082-0306)

Location	Station	Offset from Crown	Existing Grade	Proposed Grade	Grade Adjustment (ft)
E	351+22.40	24.00	454.93	454.93	0.00
F	351+32.40	24.00	455.13	455.23	0.10
G	351+42.40	24.00	455.36	455.52	0.16
H	351+52.40	24.00	455.69	455.82	0.13

CENTERLINE OF E.B. TRAFFIC LANE (S.N. 082-0306)

Location	Station	Offset from Crown	Existing Grade	Proposed Grade	Grade Adjustment (ft)
E	351+25.67	0.00	455.40	455.40	0.00
F	351+35.67	0.00	455.60	455.70	0.10
G	351+45.67	0.00	455.83	455.99	0.16
H	351+55.67	0.00	456.16	456.29	0.13

SOUTH EDGE OF E.B. TRAFFIC LANE (S.N. 082-0306)

Location	Station	Offset from Crown	Existing Grade	Proposed Grade	Grade Adjustment (ft)
E	351+28.94	24.00	454.93	454.93	0.00
F	351+38.94	24.00	455.13	455.23	0.10
G	351+48.94	24.00	455.36	455.52	0.16
H	351+58.94	24.00	455.69	455.82	0.13

WILLETT HOFMANN & ASSOCIATES INC
ENGINEERING ARCHITECTURE LAND SURVEYING
809 EAST 2ND STREET, DIXON, IL 61021-0367
T: 815-284-3381 DESIGN FIRM: #184-000918

USER NAME =	DESIGNED - SAB	REVISED -	
	CHECKED - DCB	REVISED -	
PLOT SCALE =	DRAWN - RDA	REVISED -	
PLOT DATE =	CHECKED - DCB	REVISED -	

STATE OF ILLINOIS
DEPARTMENT OF TRANSPORTATION

TOP OF EAST APPROACH SLAB ELEVATIONS
S.N. 082-0306 (EB) & S.N. 082-0307 (WB)

STRUCTURAL SHEET 6 OF 7 SHEETS

F.A.I. RTE.	SECTION	COUNTY	TOTAL SHEETS	SHEET NO.
64	82-(4,5,6,7)-1RS-2	ST. CLAIR	388	337
	WHA# 1155D20	CONTRACT NO. 76R99		
	ILLINOIS FED. AID PROJECT			

MODEL: Top of Approach Slab Elevations
FILE NAME: S:\PROJECTS\2020\1155D20_IDOT\DB\DESIGN\CAD_SHEETS\WO 11\08202306-0307\08202306-0307-D876R99-005-006-Top of Approach Slab Elevations.dgn

11/13/2024 1:37:27 PM

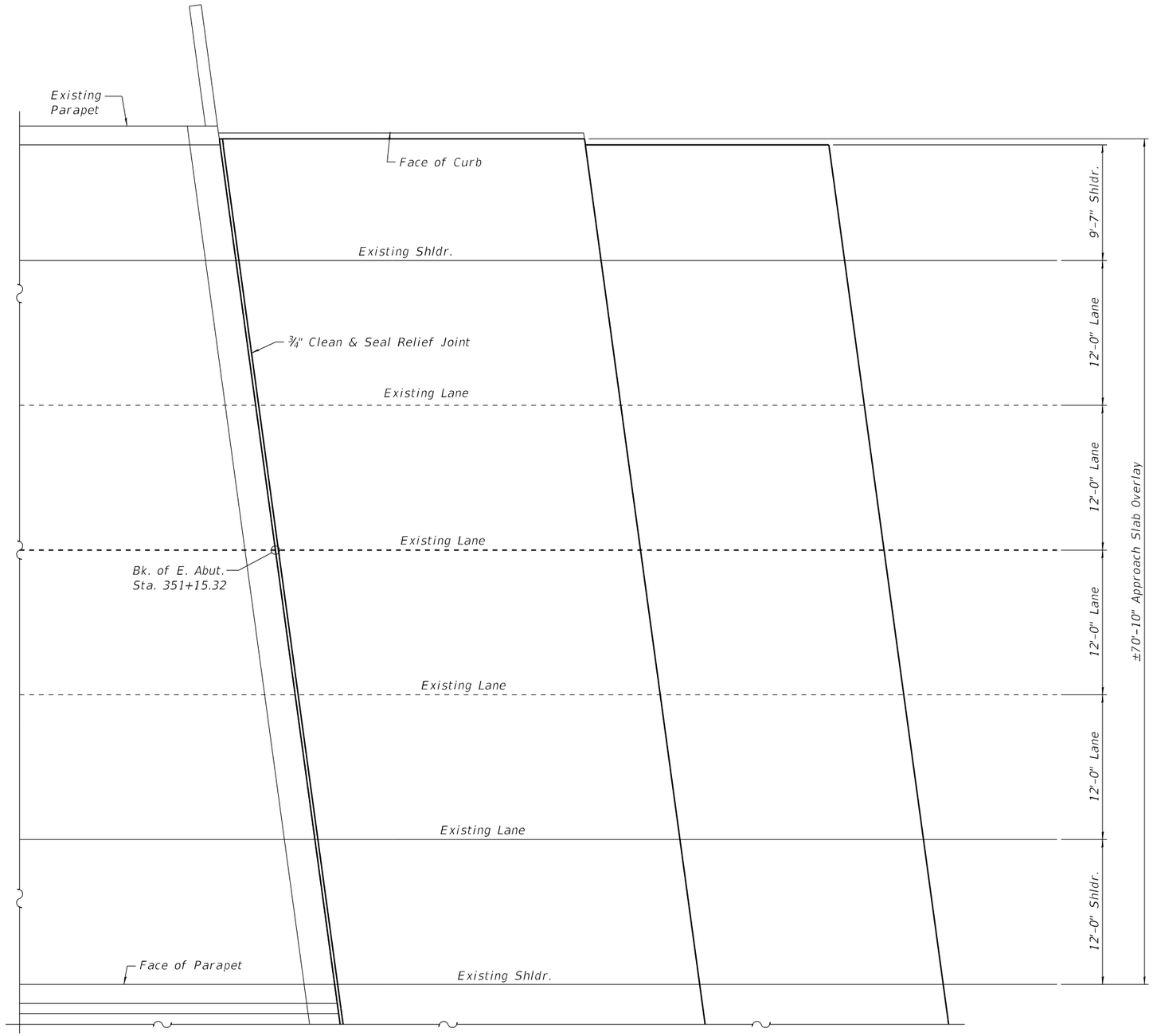

PLAN VIEW

Northeast Quadrant Shown
(Other 3 Similar)

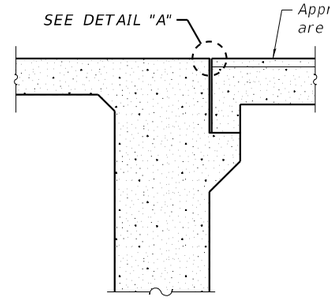

SECTION AT ABUTMENT

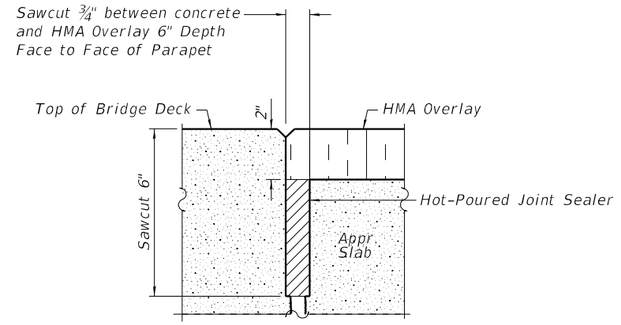

DETAIL "A"

Note: Perform sawcut and fill joint with hot pourable sealer prior to removal of concrete to prevent debris buildup in joint.

MODEL: Bridge Relief Joint Repair Details
FILE NAME: S:\PROJECTS\2020\1155D20_IDOT\D8\DESIGN\CAD_SHEETS\WO 111\08202306-030\108202306-0307-D876R99-007-Bridge Relief Jt Dtls.dgn
11/13/2024 1:37:28 PM

WILLETT HOFMANN & ASSOCIATES INC
ENGINEERING ARCHITECTURE LAND SURVEYING
809 EAST 2ND STREET, DIXON, IL 61021-0367
T: 815-284-3381 DESIGN FIRM: #184-000918

USER NAME =	DESIGNED - SAB	REVISED -	
	CHECKED - DCB	REVISED -	
PLOT SCALE =	DRAWN - TJA	REVISED -	
PLOT DATE =	CHECKED - DCB	REVISED -	

STATE OF ILLINOIS
DEPARTMENT OF TRANSPORTATION

BRIDGE RELIEF JOINT REPAIR DETAILS
S.N. 082-0306 (EB) & S.N. 082-0307 (WB)
STRUCTURAL SHEET 7 OF 7 SHEETS

F.A.I. RTE.	SECTION	COUNTY	TOTAL SHEETS	SHEET NO.
64	82-(4,5,6,7)-1RS-2	ST. CLAIR	388	338
	WHA# 1155D20	CONTRACT NO. 76R99		
	ILLINOIS	FED. AID PROJECT		

Existing Structure: S.N. 082-0174 originally built 1970 as a 2-span continuous Plate Girder with R.C. deck, 318'-5⅛" back to back length and out to out width is 46'-0". Back to Back of Approach bents with 5'-0" sidewalks on each side. Re-built in 2007. Road shall be remain open to traffic utilizing staged construction.

No Salvage.

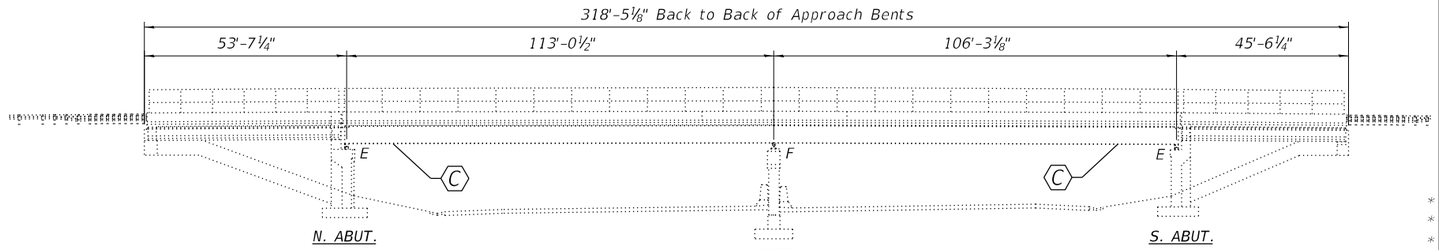

ELEVATION VIEW

BILL OF MATERIAL

ITEM	UNIT	SUPER	SUB	TOTAL
Stone Riprap, Class A4	Sq Yd	———	30	30
Filter Fabric	Sq Yd	30	———	30
Concrete Removal	Cu Yd	9.2	———	9.2
Pipe Culvert Removal	Foot	20	———	20
Protective Shield	Sq Yd	975	———	975
Floor Drains	Each	4	———	4
Concrete Superstructure	Cu Yd	9.2	———	9.2
Reinforcement Bars, Epoxy Coated	Pound	1,250	———	1,250
Bar Splicers	Each	12	———	12
Preformed Joint Strip Seal	Foot	116	———	116
Steel Flared End Sections 12"	Each	1	———	1
Pipe Drains 12"	Foot	20	———	20
* Removing and Re-Erecting Existing Railing	Foot	77	———	77
* Cleaning and Painting Steel Bridge No. 3	L Sum	1	———	1
* Structural Repair of Concrete (Depth Equal to or Less Than 5 Inches)	Sq Ft	———	165	165
* Structural Repair of Concrete (Depth Greater Than 5 Inches)	Sq Ft	———	30	30
* Deck Slab Repair (Full Depth, Type I)	Sq Yd	5	———	5
* Deck Slab Repair (Full Depth, Type II)	Sq Yd	5	———	5
* Deck Slab Repair (Partial)	Sq Yd	30	———	30
* Cleaning and Painting Exposed Rebar	L Sum	1	———	1
* Bridge Deck Concrete Sealer	Sq Ft	15,950	———	15,950
* Abutment Vault Door Retrofit	Each	1	———	1

*See Special Provisions

DESIGN STRESSES

FIELD UNITS (EXISTING CONSTRUCTION)

f'c = 3,000 psi (Superstructure - 1970 original)
fy = 40,000 psi (Reinforcement - 1970 original)
fy = 60,000 psi (Reinforcement - 2004 rehab.)

FIELD UNITS (NEW CONSTRUCTION)

f'c = 4,000 psi
fy = 60,000 psi (Reinforcement)

LOADING HS20-44

Allow 50#/sq. ft. for future wearing surface.

DESIGN SPECIFICATIONS

2002 AASHTO Standard Specifications for Highway Bridges, 17th Ed.

INDEX OF SHEETS LOCATION 3

1 General Plan and Elevation
2 Staging Details
3 Deck Patches - Top Side
4 Floor Drain Details
5 Abutment Joint Replacement Details
6 Joint Replacement and Repair Details
7-8 Preformed Joint Strip Seal
9 Abutment Repairs
10 Bar Splicer Assembly and Mechanical Splicer Details

GENERAL NOTES:

Existing reinforcement bars extending into removal area shall be cleaned, straightened and incorporated into the new construction. Any reinforcement bars that are damaged during concrete removal shall be replaced with an approved bar splice or anchorage system at the contractors expense.

Joint openings shall be adjusted according to Article 520.04 of the Standard Specifications when the deck is poured at an ambient temperature other than 50° F.

Prior to pouring the new concrete deck, all heavy or loose rust, loose mill scale, and other loose or potentially detrimental foreign material shall be removed from the surfaces in contact with concrete. Tightly adhered paint may remain unless noted otherwise. Removal shall be accomplished by methods that will not damage the steel and the cost will be included in the pay item covering removal of the existing concrete.

Plan dimensions and details relative to the existing structure have been taken from existing plans are Subject to nominal construction variations. The contractor shall field verify existing dimensions and details affecting new construction and make necessary approved adjustments prior to construction or ordering of materials. Such variations shall not be cause for additional compensation for a change in scope of the work, however, the contractor will be paid for the quantity actually furnished at the unit price bid for the work.

Cleaning and painting of the existing steel structural steel is required for this structure and shall be performed as specified in the special provisions for "cleaning and painting existing Steel structures." all beams, bearings and other structural steel within 5ft (measured along the beam) of either side of deck joints shall be cleaned per near white blast cleaning SSPC-SP10. The exterior Surfaces and bottom of the bottom flange of the fascia beams shall be cleaned per commercial grade Power tool cleaning - SSPC 15.

The designated areas cleaned per near white blast cleaning and per commercial grade power tool cleaning shall be painted according to the requirements of moisture cured urethane paint system. The color of the final finish coat for all interior surfaces shall be Gray, Munsell No. 5B 7/1. The color of the final finish coat for the exterior and bottom flange of the fascia beams shall match the existing paint, which shall be Gray, Munsell No. 5B 7/1.

SSPC QP1 certification is required for this contract.

Bridge deck concrete sealer includes the top of decks, approach slabs, and the front faces and tops of curbs and parapets.

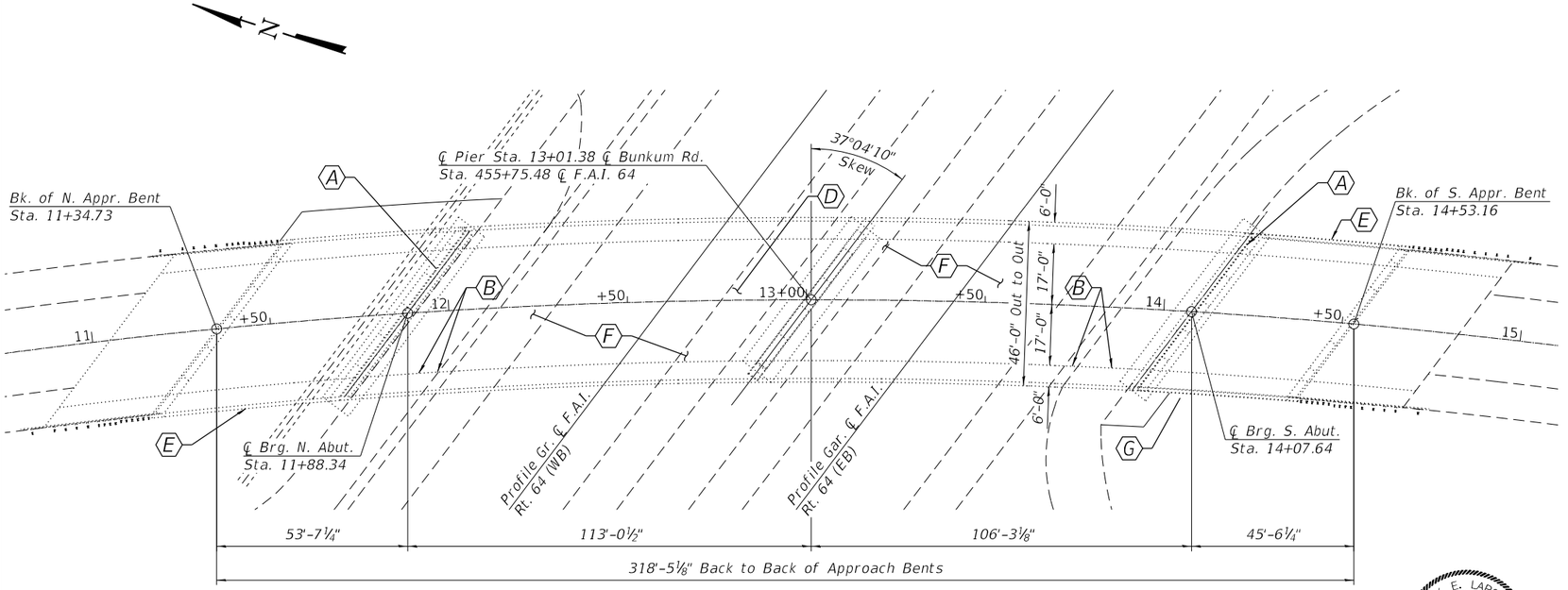

PLAN VIEW

SCOPE OF WORK

(A) Remove existing Expansion Joints and install new Preformed Joint Strip Seals.

(B) Install Deck Drains.

(C) Clean and Paint Structural Steel at Joint locations.

(D) Bridge Deck Slab Repair, various locations. See Structural Sheet 3 of 9.

(E) Install Vaulted Abutment Panel Hardware.

(F) Bridge Deck Concrete Sealer.

(G) Pipe Culvert & End Section Repair, Riprap Erosion Repair.

ERIK E. LARSON
081-008533
LICENSED STRUCTURAL ENGINEER OF ILLINOIS

DATE: 1/31/2025
EXPIRES 11/30/26

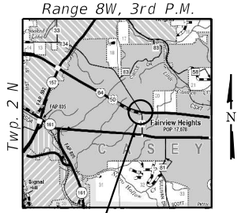

LOCATION SKETCH

GENERAL PLAN AND ELEVATION
S.A. ROUTE 34 (BUNKUM RD.)
OVER F.A.I. ROUTE 64
SEC. 82-(4,5,6,7)-1RS-2
ST. CLAIR COUNTY
STATION 455+75.48
STRUCTURE NO. 082-0174

MODEL: GPE
FILE NAME: S:\PROJECTS\2020\1155D20_IDOT\DB\DESIGN\CAD_SHEETS\WO 11\082017\4\082017400-D876R99-001-GPE.dgn
2/5/2025 1:06:42 PM

WILLETT HOFMANN & ASSOCIATES INC
ENGINEERING ARCHITECTURE LAND SURVEYING
809 EAST 2ND STREET, DIXON, IL 61021-0367
T: 815-284-3381 DESIGN FIRM: #184-006918

USER NAME =	DESIGNED - JKP	REVISED -	
	CHECKED - DCB	REVISED -	
PLOT SCALE =	DRAWN - FDL	REVISED -	
PLOT DATE =	CHECKED - DCB	REVISED -	

STATE OF ILLINOIS
DEPARTMENT OF TRANSPORTATION

STRUCTURAL SHEET 1 OF 10 SHEETS

F.A.I. RTE.	SECTION	COUNTY	TOTAL SHEETS	SHEET NO.
64	82-(4,5,6,7)-1RS-2	ST. CLAIR	388	339
	WHA# 1155D20	CONTRACT NO. 76R99		
	ILLINOIS	FED. AID PROJECT		

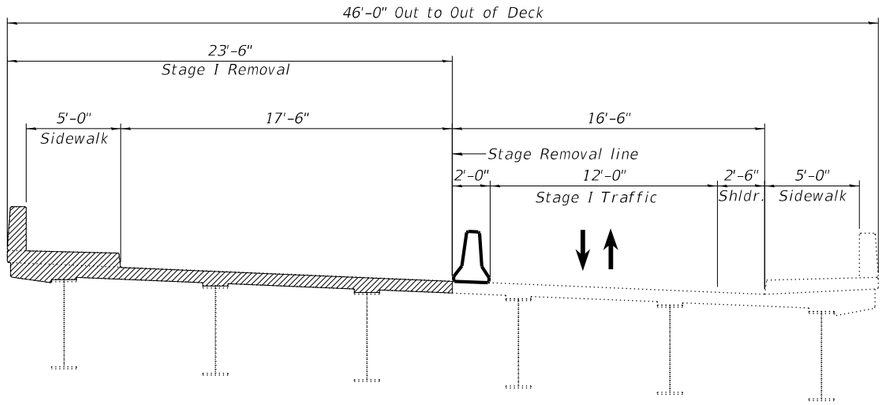

STAGE I REMOVAL

(Looking South)
(Showing Deck joint, Approach Spans Similar)

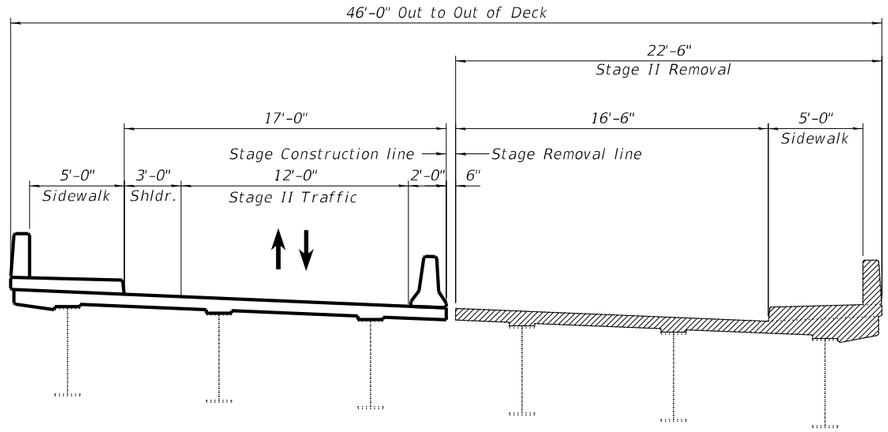

STAGE II REMOVAL

(Looking South)
(Showing Deck joint, Approach Spans Similar)

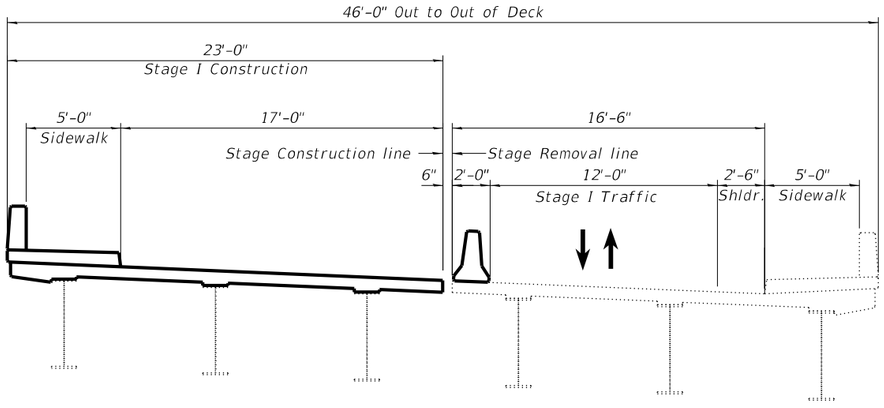

STAGE I CONSTRUCTION

(Looking South)
(Showing Deck joint, Approach Spans Similar)

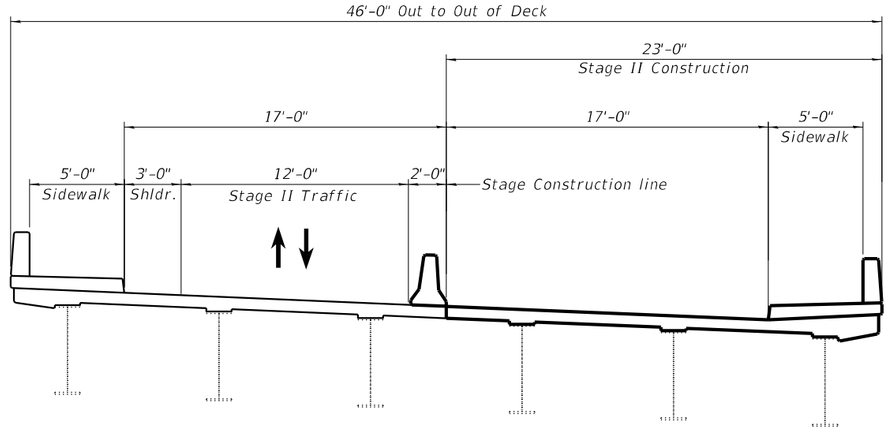

STAGE II CONSTRUCTION

(Looking South)
(Showing Deck joint, Approach Spans Similar)

LEGEND

Removal at joint location only.
See Structural Sheet 5 of 9.

WILLETT HOFMANN & ASSOCIATES INC
ENGINEERING ARCHITECTURE LAND SURVEYING
809 EAST 2ND STREET, DIXON, IL 61021-0367
T: 815-284-3381 DESIGN FIRM: #184-000918

USER NAME =	DESIGNED - JKP	REVISED -	
	CHECKED - DCB	REVISED -	
PLOT SCALE =	DRAWN - TJA	REVISED -	
PLOT DATE =	CHECKED - DCB	REVISED -	

STATE OF ILLINOIS
DEPARTMENT OF TRANSPORTATION

STAGING DETAILS
STRUCTURE NO. 082-0174
STRUCTURAL SHEET 2 OF 10 SHEETS

F.A.I. RTE.	SECTION	COUNTY	TOTAL SHEETS	SHEET NO.
64	82-(4,5,6,7)-1RS-2	ST. CLAIR	388	340
	WHA# 1155D20	CONTRACT NO. 76R99		
	ILLINOIS	FED. AID PROJECT		

MODEL: Staging Details
FILE NAME: S:\PROJECTS\2020\1155D20_IDOT\D8\DESIGN\CAD_SHEETS\WO 11\08201740820174-D876R99-002-StgDtls.dgn
11/13/2024 1:37:33 PM

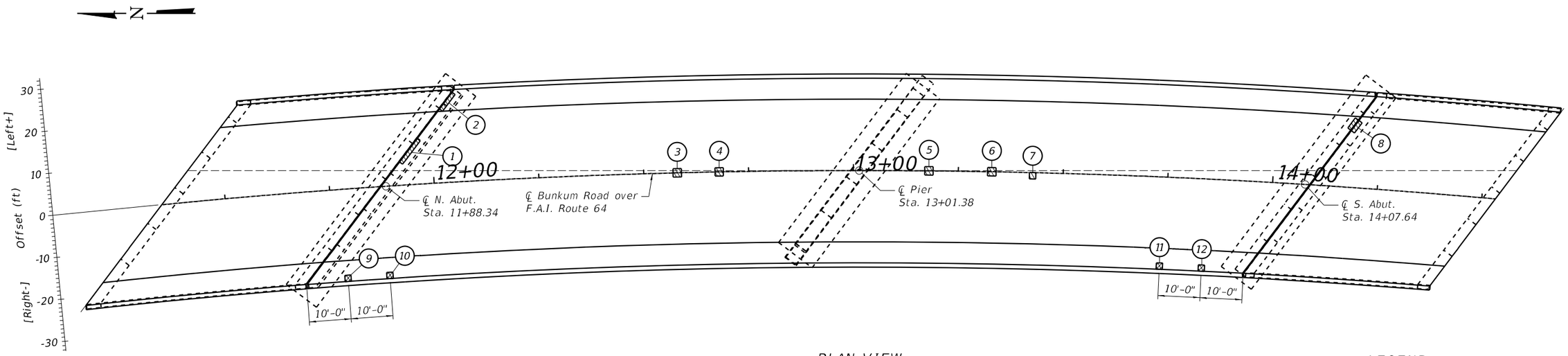

PLAN VIEW

LEGEND

Deck Slab Repair (Partial)

Deck Slab Repair (Full Depth, Type I)

DECK PATCHES

	Patch #	Start Sta	End Sta	Offsets (ft) From		Offsets (ft) To		Length (ft.)	Width (ft.)	Area (sy)	Full or Partial Depth
	1	11+92	11+93	2	Lt	9	Lt	1	7	0.78	P
	2	11+97	11+98	12	Lt	17	Lt	1	5	0.56	P
	3	12+57	12+59	1	Lt	1	Rt	2	2	0.44	P
	4	12+67	12+69	1	Lt	1	Rt	2	2	0.44	P
	5	13+17	13+19	1	Lt	1	Rt	2	2	0.44	P
	6	13+32	13+34	1	Lt	1	Rt	2	2	0.44	P
	7	13+42	13+44	0	Lt	1,5	Rt	1,5	1,5	0.25	P
	8	14+17	14+19	12	Lt	15	Lt	2	3	0.67	P
**	9	11+82	11+83	16	Rt	17	Rt	1	1	0.11	F
**	10	11+92	11+93	16	Rt	17	Rt	1	1	0.11	F
**	11	13+77	13+78	16	Rt	17	Rt	1	1	0.11	F
**	12	13+87	13+88	16	Rt	17	Rt	1	1	0.11	F

**FLOOR DRAIN LOCATIONS. PLACE FLOOR DRAIN PIPE IN HOLE AND FORM CONCRETE AROUND PIPE.

BILL OF MATERIAL

	ITEM	UNIT	TOTAL
*	Deck Slab Repair (Full Depth, Type I)	Sq. Yd.	5
*	Deck Slab Repair (Full Depth, Type II)	Sq. Yd.	5
*	Deck Slab Repair (Partial)	Sq. Yd.	30
	Floor Drains	Each	4

* These pay items shall be applicable for any repair needed on the deck as determined by the Engineer in the field.

NOTES:

The areas and locations of Deck Slab Repair (Partial) are estimated. The deck survey and schedule shows 4 sq. yd. of partial depth deck slab repairs. Plan quantities have been increased to 30 sq. yd. The Engineer shall mark limits in the field for repair locations.

Deck repair areas near bridge joints shall be paid only when the deck repair area extends beyond the joint repair limits. See Structural Sheet 5 of 9 for joint replacement details.

No areas of Deck Slab Repair (Full Depth, Type I) or Deck Slab Repair (Full Depth, Type II) were noted during the deck inspection. These pay items are contingencies based on 10% of the plan quantity area of Deck Slab Repair (Partial). If required, the Engineer shall determine the limits of these pay items in the field.

All Concrete Removal Regions shall have a ¾" sawcut around perimeter prior to Concrete Removal operations. Cost included in Deck Slab Repair (Partial), Deck Slab Repair (Full Depth, Type I), or Deck Slab Repair (Full Depth, Type II).

See Structural Sheet 4 of 9 for Deck Drain Details.

The Engineer shall show actual patch locations on as-built plans.

The deck survey was completed on 10/9/2023.

WILLETT HOFMANN & ASSOCIATES INC
ENGINEERING ARCHITECTURE LAND SURVEYING
809 EAST 2ND STREET, DIXON, IL 61021-0367
T: 815-284-3381 DESIGN FIRM: #184-000918

USER NAME =	DESIGNED - JKP	REVISED -	
	CHECKED - DCB	REVISED -	
PLOT SCALE =	DRAWN - RDA	REVISED -	
PLOT DATE =	CHECKED - DCB	REVISED -	

STATE OF ILLINOIS
DEPARTMENT OF TRANSPORTATION

DECK PATCHES - TOP SIDE
STRUCTURE NO. 082-0174
STRUCTURAL SHEET 3 OF 10 SHEETS

F.A.I. RTE.	SECTION	COUNTY	TOTAL SHEETS	SHEET NO.
64	82-(4,5,6,7)-1RS-2	ST. CLAIR	388	341
	WHA# 1155D20	CONTRACT NO. 76R99		
	ILLINOIS	FED. AID PROJECT		

MODEL: Deck Patches Top Side
FILE NAME: S:\PROJECTS\2020\1155D20_IDOT\D8\DESIGN\CAD_SHEETS\WO 11082017A\0820174-D876R99-003-Deck Patches Top Side.dgn
11/13/2024 1:37:33 PM

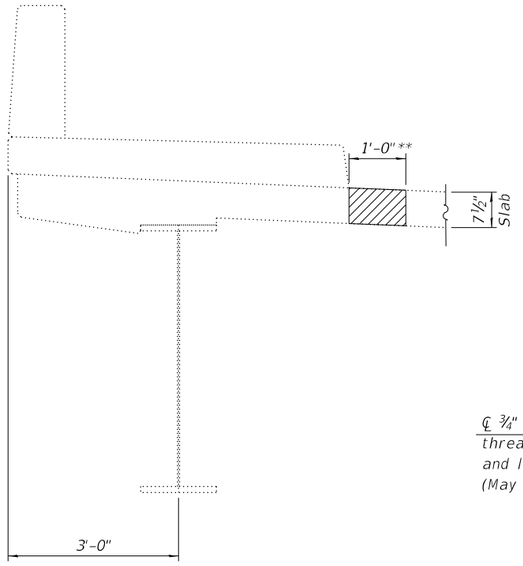

SECTION THRU DECK

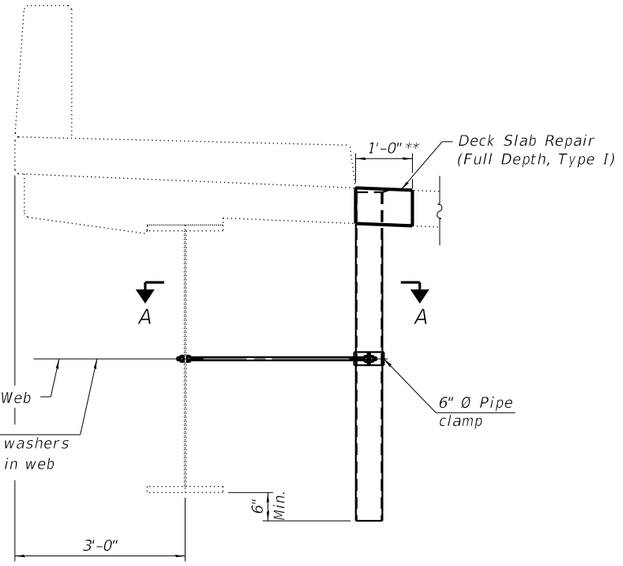

DRAIN REPLACEMENT DETAIL

**Actual dimensions of Deck Slab Repair shall be determined by Field Engineer

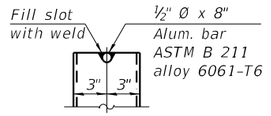

ALUMINUM TUBE

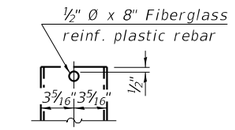

FIBERGLASS PIPE

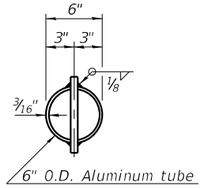

TOP PLAN
(Showing aluminum tube)

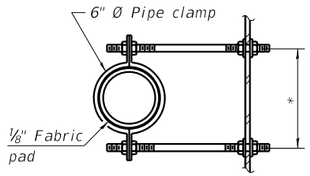

SECTION A-A
*Dimension as required by pipe clamp

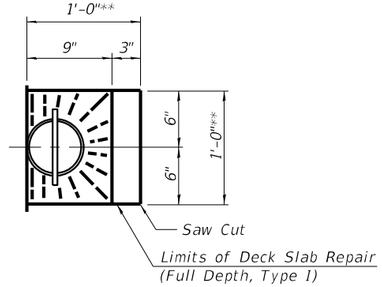

TOP PLAN DECK REPAIR AT PROPOSED DRAINS

NOTES:

Fiberglass pipe shall conform to ASTM D2996, with short-time rupture strength hoop tensile stress of 30,000 p.s.i. minimum.

The exterior surfaces of the floor drains shall be painted according to Article 506 with the finish coat as specified. The exterior surfaces of the drains shall be cleaned according to the Society of Protective Coating's Spec. SSPC-SP1 prior to painting.

The top portion of aluminum floor drains shall be coated to minimize reaction with wet concrete.

The clamping device shall be galvanized according to AASHTO M 232. Cost of clamping device included with Floor Drains.

WILLETT HOFMANN & ASSOCIATES INC
ENGINEERING ARCHITECTURE LAND SURVEYING
809 EAST 2ND STREET, DIXON, IL 61021-0367
T: 815-284-3381 DESIGN FIRM: #184-000918

USER NAME =	DESIGNED - JKP	REVISED -
	CHECKED - DCB	REVISED -
PLOT SCALE =	DRAWN - RDA	REVISED -
PLOT DATE =	CHECKED - DCB	REVISED -

STATE OF ILLINOIS
DEPARTMENT OF TRANSPORTATION

FLOOR DRAIN DETAILS
STRUCTURE NO. 082-0174
STRUCTURAL SHEET 4 OF 10 SHEETS

F.A.I. RTE.	SECTION	COUNTY	TOTAL SHEETS	SHEET NO.
64	82-(4,5,6,7)-1RS-2	ST. CLAIR	388	342
	WHA# 1155D20	CONTRACT NO. 76R99		
	ILLINOIS FED. AID PROJECT			

MODEL: Floor Drain Details
FILE NAME: S:\PROJECTS\2020\1155D20_IDOTD8\DESIGN\CAD_SHEETS\WO 11108201740820174-D876R99-004-Floor Drain Details.dgn
11/13/2024 1:37:34 PM

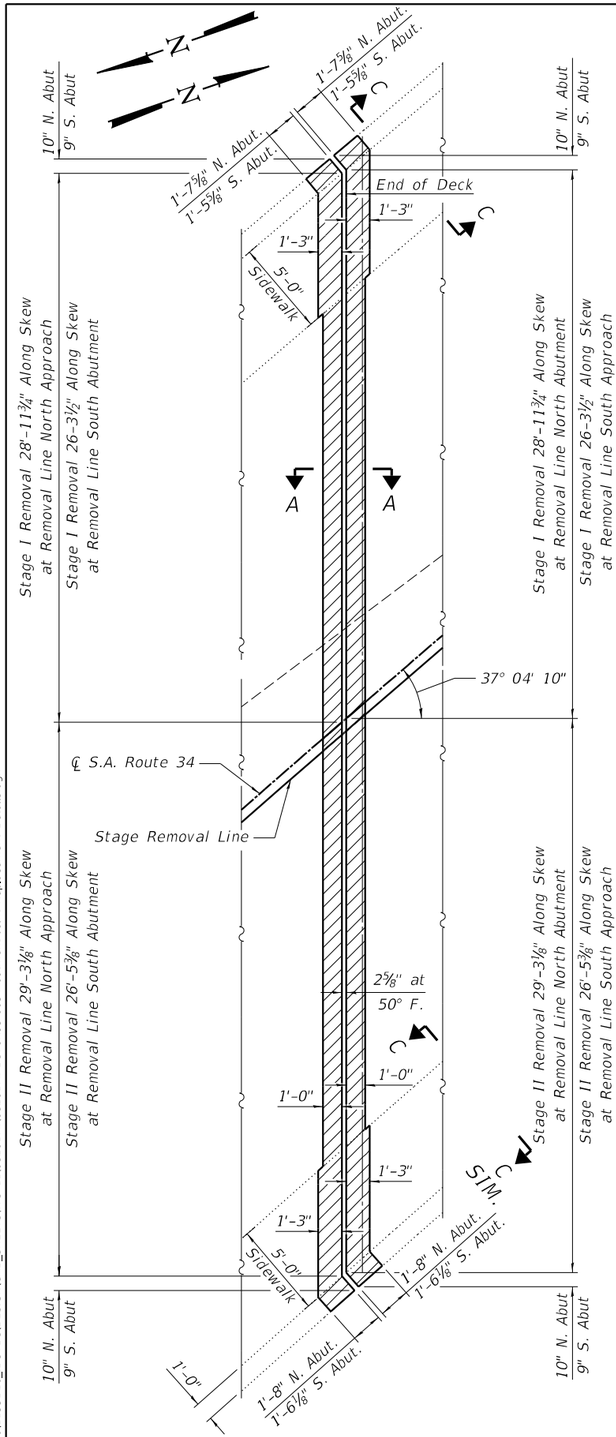

REMOVAL PLAN

(N. Abutment Shown, S. Abutment Similar)

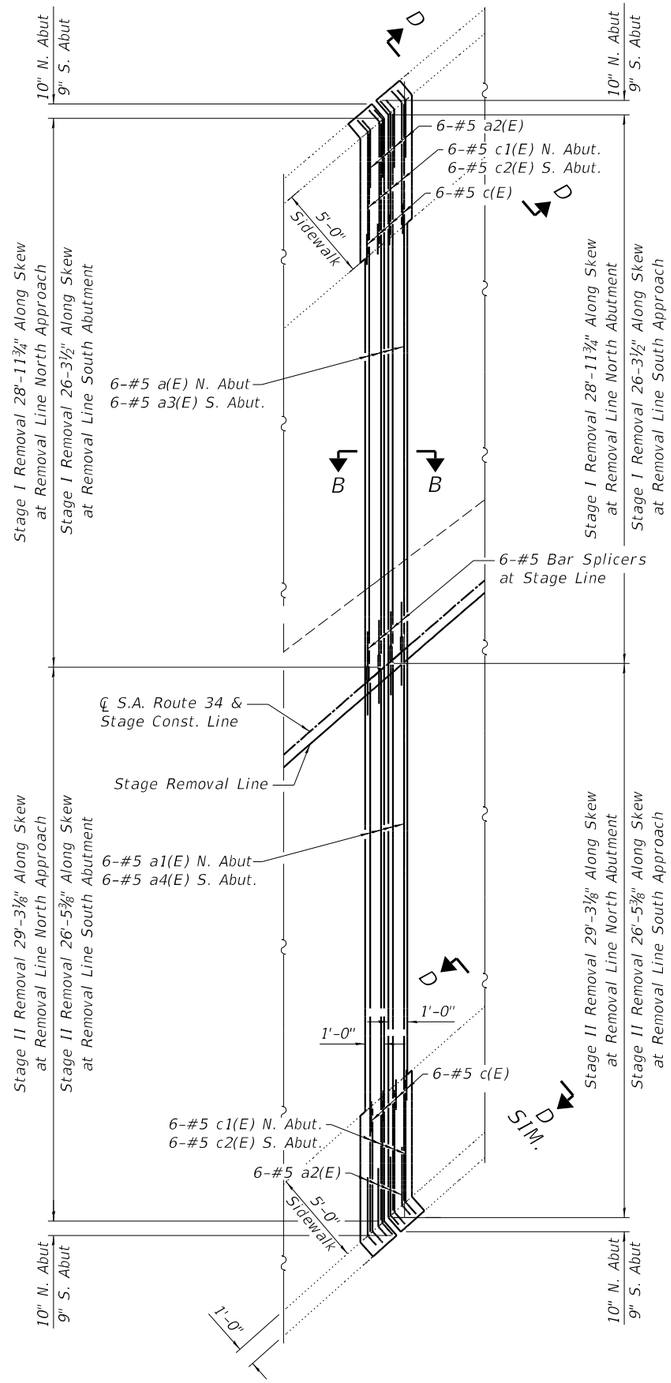

REPLACEMENT PLAN

(N. Abutment Shown, S. Abutment Similar)

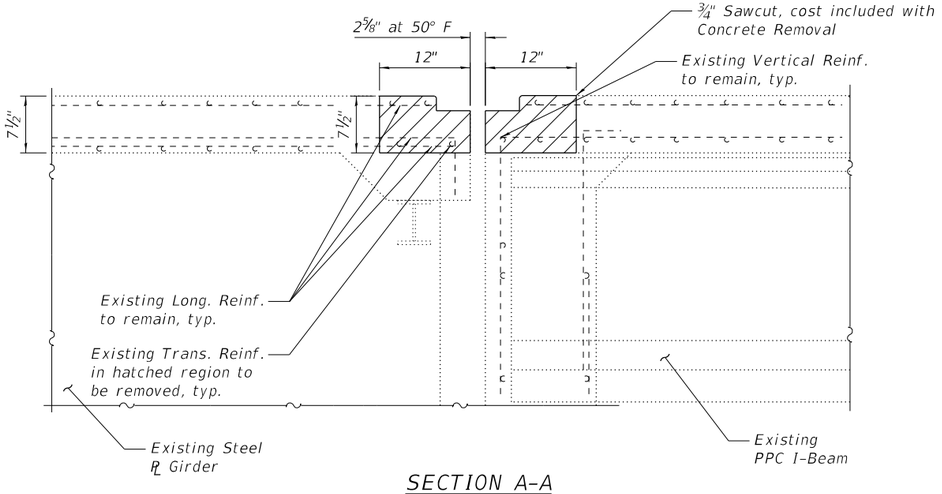

SECTION A-A

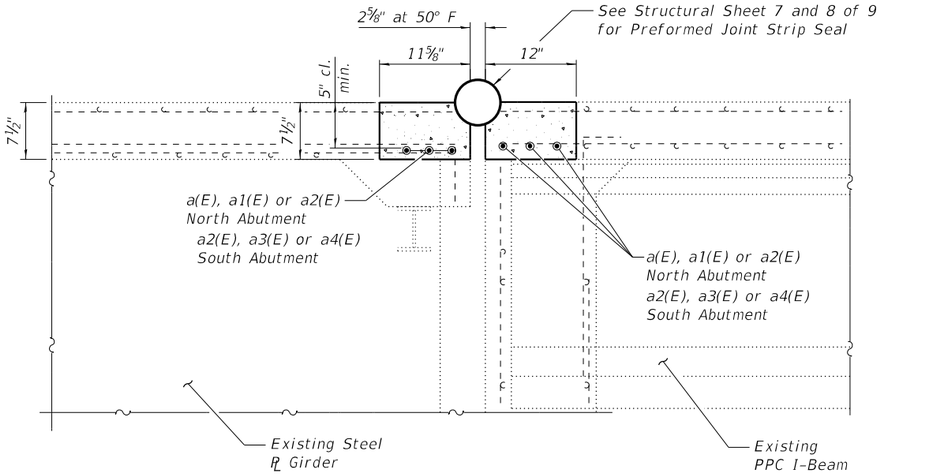

SECTION B-B

LEGEND:

Concrete Removal

NOTES:

Existing reinforcement bars extending into the removal area shall be cleaned, straightened and incorporated into the new construction. Any reinforcement bars that are damaged during Concrete Removal shall be replaced with approved bar splicer or anchorage system. Cost included with Concrete Removal.

See Structural Sheet 6 of 9 for Sections, Bill of Material and Reinforcement Bending Diagrams.

See Sheet 53 of 53 for Bar splicer Details.

WILLETT HOFMANN & ASSOCIATES INC
ENGINEERING ARCHITECTURE LAND SURVEYING
809 EAST 2ND STREET, DIXON, IL 61021-0367
T: 815-284-3381 DESIGN FIRM: #184-000918

USER NAME =	DESIGNED - JAP	REVISED -	
	CHECKED - DCB	REVISED -	
PLOT SCALE =	DRAWN - DAN	REVISED -	
PLOT DATE =	CHECKED - DCB	REVISED -	

STATE OF ILLINOIS
DEPARTMENT OF TRANSPORTATION

ABUTMENT JOINT REPLACEMENT DETAILS
STRUCTURE NO. 082-0174

STRUCTURAL SHEET 5 OF 10 SHEETS

F.A.I. RTE.	SECTION	COUNTY	TOTAL SHEETS	SHEET NO.
64	82-(4,5,6,7)-1RS-2	ST. CLAIR	388	343
	WHA# 1155D20	CONTRACT NO. 76R99		
	ILLINOIS	FED. AID PROJECT		

MODEL: Abutment Joint Replacement Details
FILE NAME: S:\PROJECTS\2020\1155D20_IDOT\D8\DESIGN\CAD_SHEETS\WO 11108201740820174-D876f699-005-Abutment Joint Replacement Details.dgn
11/13/2024 1:37:34 PM

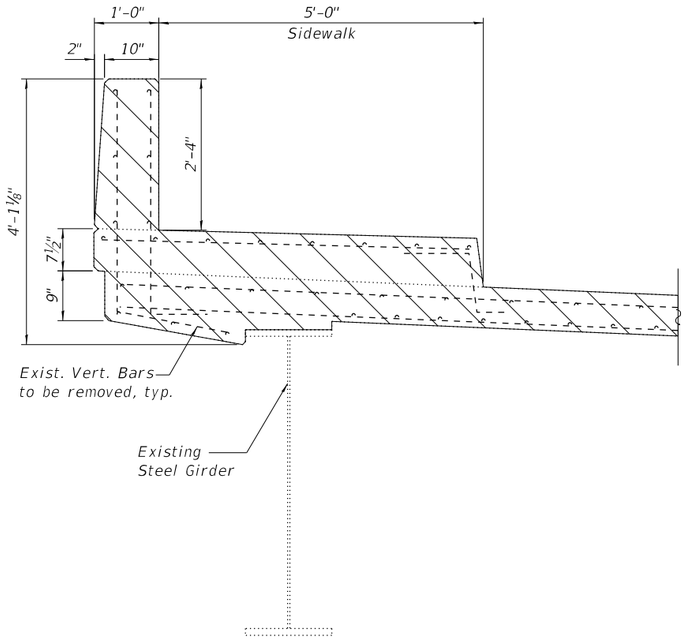

SECTION C-C

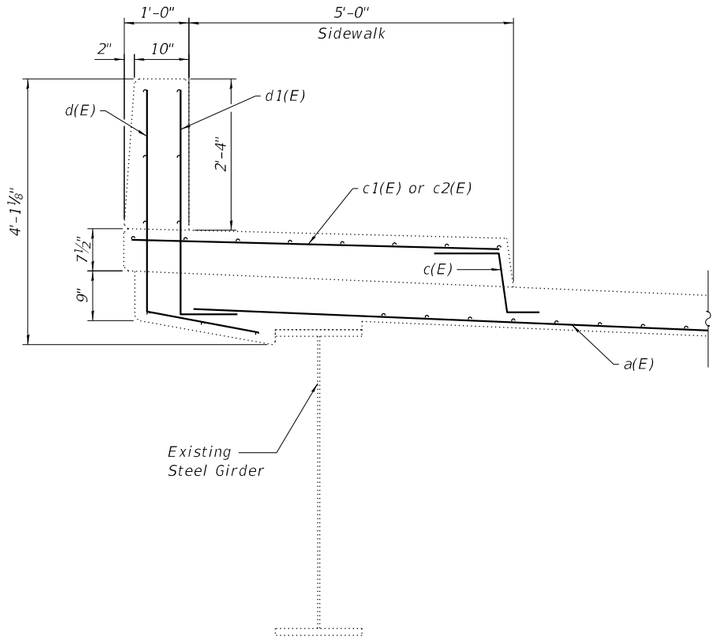

SECTION D-D

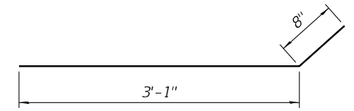

a2(E) BAR
(Edge of Deck)

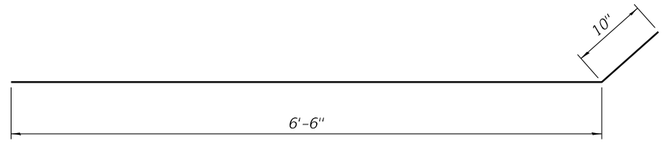

c1(E) BAR
(Top of Sidewalk N. Abut.)

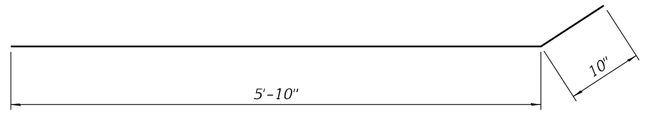

c2(E) BAR
(Top of Sidewalk S. Abut.)

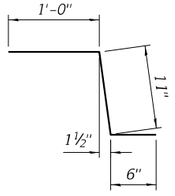

c(E) BAR
(Sidewalk)

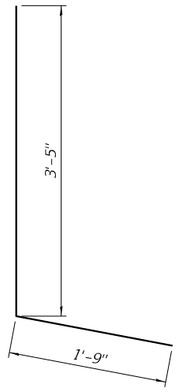

d(E) BAR
(Parapet)

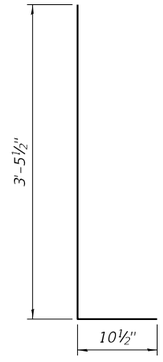

d1(E) BAR
(Parapet)

LEGEND:

Concrete Removal

BILL OF MATERIAL

Bar	No.	Size	Length	Shape
a(E)	6	#5	28'-0"	
a1(E)	6	#5	29'-0"	
a2(E)	24	#5	3'-9"	
a3(E)	6	#5	26'-0"	
a4(E)	6	#5	26'-0"	
c(E)	24	#5	2'-5"	
c1(E)	12	#5	7'-4"	
c2(E)	12	#5	6'-8"	
d(E)	24	#5	4'-4"	
d1(E)	24	#5	5'-2"	
Concrete Removal			Cu. Yds.	9.2
Concrete Superstructure			Cu. Yds.	9.2
Reinforcement Bars, Epoxy Coated			Pound	1,250
Bar Splicers			Each	12

WILLETT HOFMANN & ASSOCIATES INC
ENGINEERING ARCHITECTURE LAND SURVEYING
809 EAST 2ND STREET, DIXON, IL 61021-0367
T: 815-284-3381 DESIGN FIRM: #184-000918

USER NAME =	DESIGNED - JKP	REVISED -	
	CHECKED - DCB	REVISED -	
PLOT SCALE =	DRAWN - TJA	REVISED -	
PLOT DATE =	CHECKED - DCB	REVISED -	

STATE OF ILLINOIS
DEPARTMENT OF TRANSPORTATION

JOINT REPLACEMENT AND REPAIR DETAILS
STRUCTURE NO. 082-0174
STRUCTURAL SHEET 6 OF 10 SHEETS

F.A.I. RTE.	SECTION	COUNTY	TOTAL SHEETS	SHEET NO.
64	82-(4,5,6,7)-1RS-2	ST. CLAIR	388	344
	WHA# 1155D20	CONTRACT NO. 76R99		
	ILLINOIS	FED. AID PROJECT		

MODEL: Joint Replacement and Repair Details
FILE NAME: S:\PROJECTS\2020\1155D20_IDOT\D8\DESIGN\CAD_SHEETS\WO 11\08201740820174-D876R99-006-JRReplacementandRepairDtls.dgn
11/13/2024 1:37:36 PM

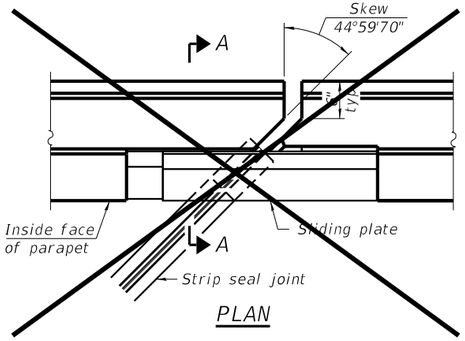

PLAN

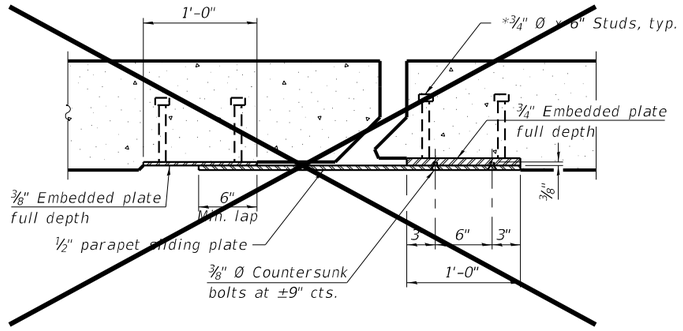

SECTION B-B

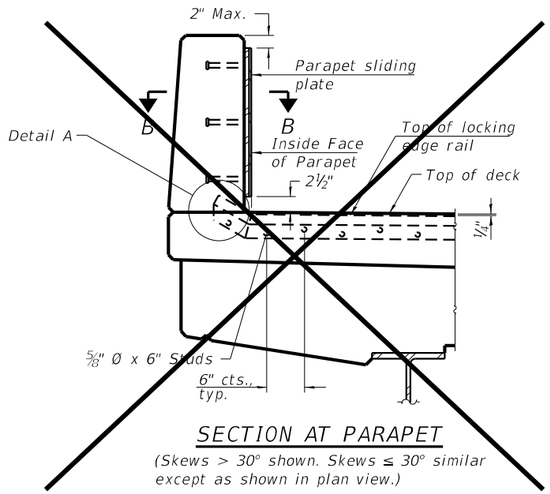

SECTION AT PARAPET

(Skews > 30° shown. Skews ≤ 30° similar except as shown in plan view.)

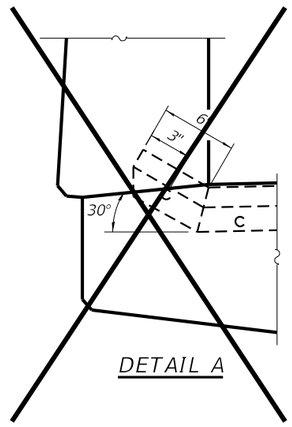

DETAIL A

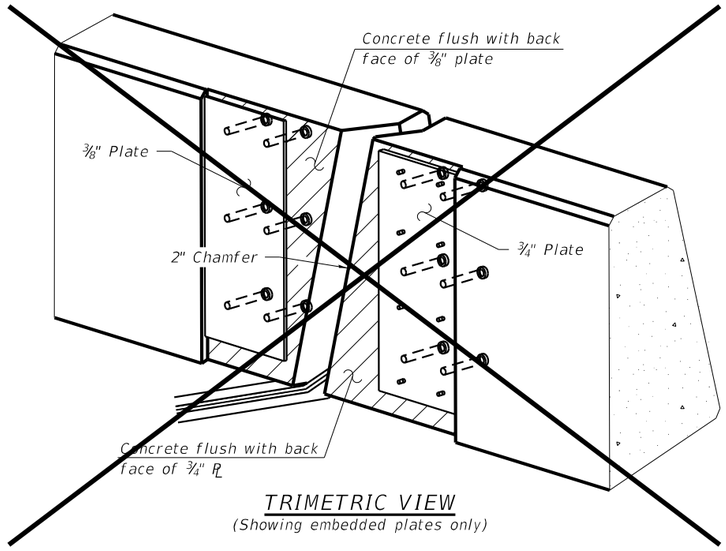

TRIMETRIC VIEW

(Showing embedded plates only)

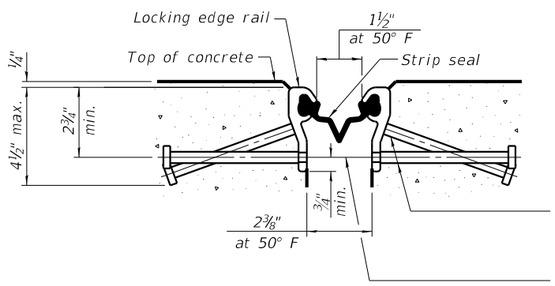

SHOWING ROLLED RAIL JOINT

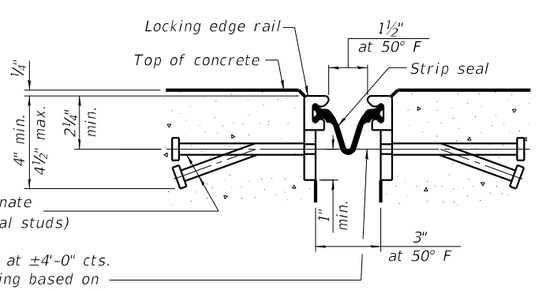

SHOWING WELDED RAIL JOINT

* ⅝" Ø x 6" studs @ 6" cts. (alternate angled/bent studs with horizontal studs)

⅞" ϕ threaded rods in 7/16" ϕ holes at ±4'-0" cts. for holding the proper joint opening based on the temperature during the deck pour. Place to miss studs. All rods shall be burned, or sawed off flush with the plates after concrete is set.

SECTION A-A

* Granular or solid flux filled headed studs conforming to Article 1006.32 of the Std. Specs., automatically end welded.

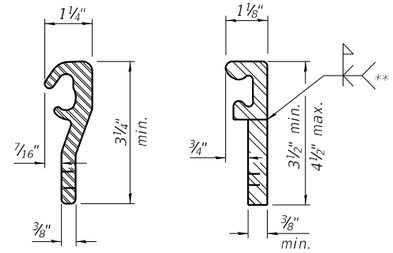

ROLLED (EXTRUDED) RAIL

WELDED RAIL

LOCKING EDGE RAILS

** Back gouge not required if complete joint penetration is verified by mock-up.

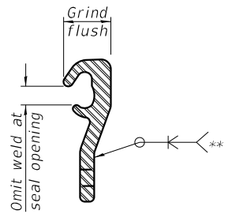

LOCKING EDGE RAIL SPLICE

The inside of the locking edge rail groove shall be free of weld residue.

Rolled rail shown, welded rail similar.

NOTES:

The strip seal shall be made continuous and shall have a minimum thickness of ¼". The configuration of the strip seal shall match the configuration of the locking edge rails. Open or "webbed" strip seal gland configurations are not permitted. The gland shall be sized for a maximum rated movement of 4 inches.

The locking edge rails depicted are configured for typical applications and are conceptual only. The actual configuration of the locking edge rails and matching strip seal may vary from manufacturer to manufacturer provided they fit the application and meet the minimum anchorage shown. Flanged edge rails, however, will not be allowed. Locking edge rails may exceed the 4½" maximum depth provided the anchorage system is revised according to the manufacturer's recommendation.

The manufacturer's recommended installation methods shall be followed.

All steel components shall be galvanized after fabrication according to Article 520.03 of the Standard Specifications.

The Maximum space between locking edge rail segments shall be 3/16" and sealed with a suitable sealant; however, any rail joint within 10' measured perpendicular to the face of the curb or parapet shall be welded as shown in the locking edge rail splice detail.

The top surface of sidewalk sliding plates shall have a raised pattern according to ASTM A786.

Cost of parapet sliding plates, sidewalk sliding plates, embedded plates, anchorage studs, and expansion anchors included with Preformed Joint Strip Seal.

The concrete opening below the strip seal will vary based on the locking edge rail chosen by the Contractor. Deck and parapet lengths shown elsewhere in the plans are dimensioned to the concrete opening, not the joint opening, and are based on the rolled locking edge rail. If the Contractor elects to use a different locking edge rail, dimensional adjustments may be required. One exception to this would be the strip seal joint at the end of the precast bridge approach slab. For these cases the pavement connector length shall be adjusted, not the length of the bridge approach slab.

BILL OF MATERIAL

Item	Unit	Total
Preformed Joint Strip Seal	Foot	116

MODEL: Preformed Joint Strip Seal
FILE NAME: S:\PROJECTS\2020\1155D20_IDOT\D8\DESIGN\CAD_SHEETS\WO 11108201741082017410820174-D8766R99-007-008-Preformed Joint Strip Seal.dgn
11/13/2024 1:37:36 PM

WILLETT HOFMANN & ASSOCIATES INC
ENGINEERING ARCHITECTURE LAND SURVEYING
809 EAST 2ND STREET, DIXON, IL 61021-0367
T: 815-284-3381 DESIGN FIRM: #184-000918

USER NAME =	DESIGNED - JKP	REVISED -	
	CHECKED - DCB	REVISED -	
PLOT SCALE =	DRAWN - RDA	REVISED -	
PLOT DATE =	CHECKED - DCB	REVISED -	

STATE OF ILLINOIS
DEPARTMENT OF TRANSPORTATION

PREFORMED JOINT STRIP SEAL
STRUCTURE NO. 082-0174
STRUCTURAL SHEET 7 OF 10 SHEETS

F.A.I. RTE.	SECTION	COUNTY	TOTAL SHEETS	SHEET NO.
64	82-(4,5,6,7)-1RS-2	ST. CLAIR	388	345
	WHA# 1155D20	CONTRACT NO. 76R99		
	ILLINOIS FED. AID PROJECT			

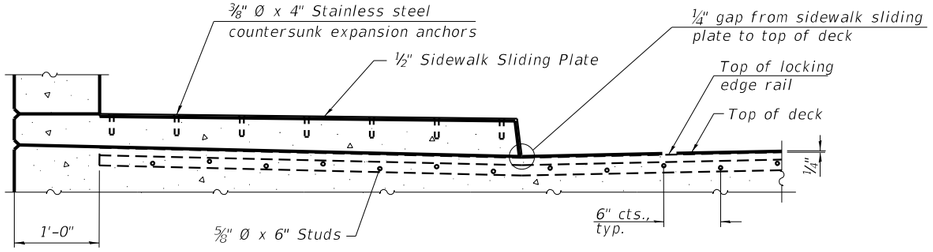

SECTION AT RAISED SIDEWALK

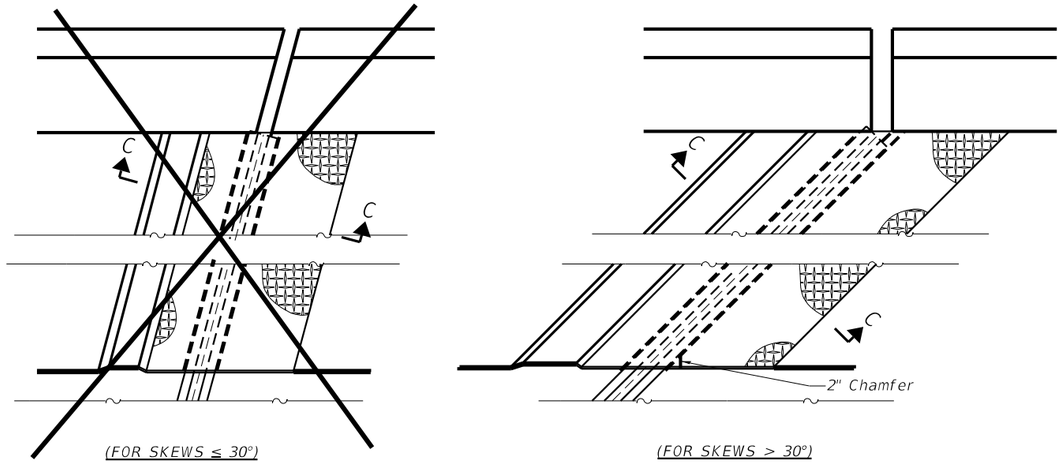

(FOR SKEWS ≤ 30°)

(FOR SKEWS > 30°)

PLAN AT RAISED SIDEWALK

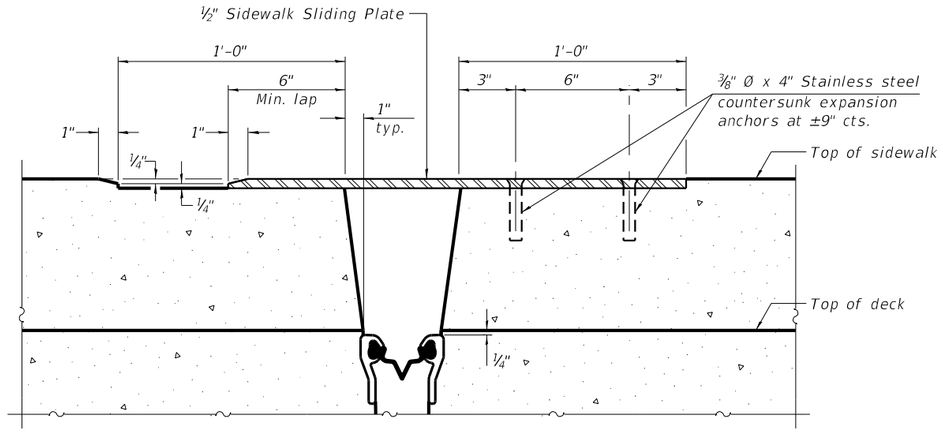

SECTION C-C

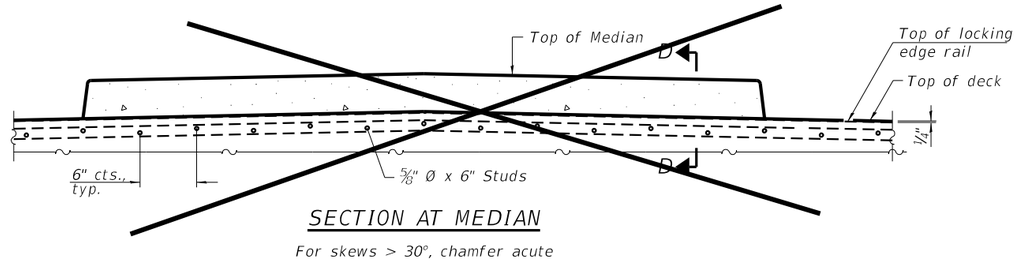

SECTION AT MEDIAN

For skews > 30°, chamfer acute corners 2" similar to sidewalk.

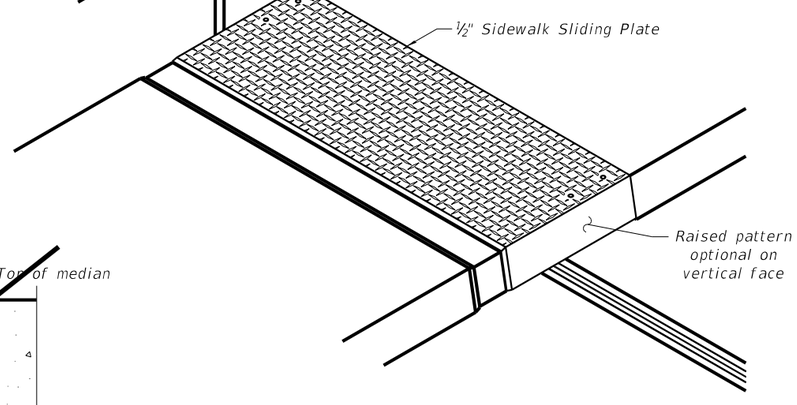

TRIMETRIC VIEW

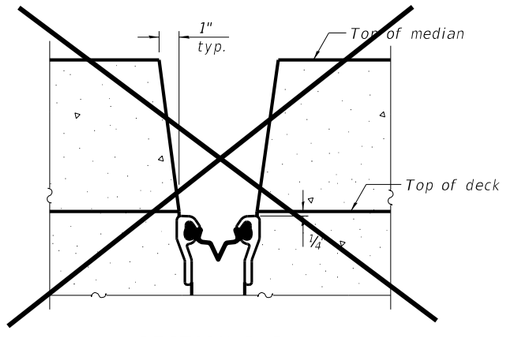

SECTION D-D

(at Rt. ∠'s)

MODEL: Preformed Joint Strip Seal
FILE NAME: S:\PROJECTS\2020\1155D20_IDOT\D8\DESIGN\CAD_SHEETS\WO 11\08201741\08201741-D876R99-007-008-Preformed Joint Strip Seal.dgn
11/13/2024 1:37:37 PM

WILLETT HOFMANN & ASSOCIATES INC ENGINEERING ARCHITECTURE LAND SURVEYING 809 EAST 2ND STREET, DIXON, IL 61021-0367 T: 815-284-3381 DESIGN FIRM: #184-000918	USER NAME =	DESIGNED - JKP	REVISED -
		CHECKED - DCB	REVISED -
	PLOT SCALE =	DRAWN - RDA	REVISED -
	PLOT DATE =	CHECKED - DCB	REVISED -

STATE OF ILLINOIS
DEPARTMENT OF TRANSPORTATION

PREFORMED JOINT STRIP SEAL
STRUCTURE NO. 082-0174
STRUCTURAL SHEET 8 OF 10 SHEETS

F.A.I. RTE.	SECTION	COUNTY	TOTAL SHEETS	SHEET NO.
64	82-(4,5,6,7)-1RS-2	ST. CLAIR	388	346
	WHA# 1155D20	CONTRACT NO. 76R99		
	ILLINOIS	FED. AID PROJECT		

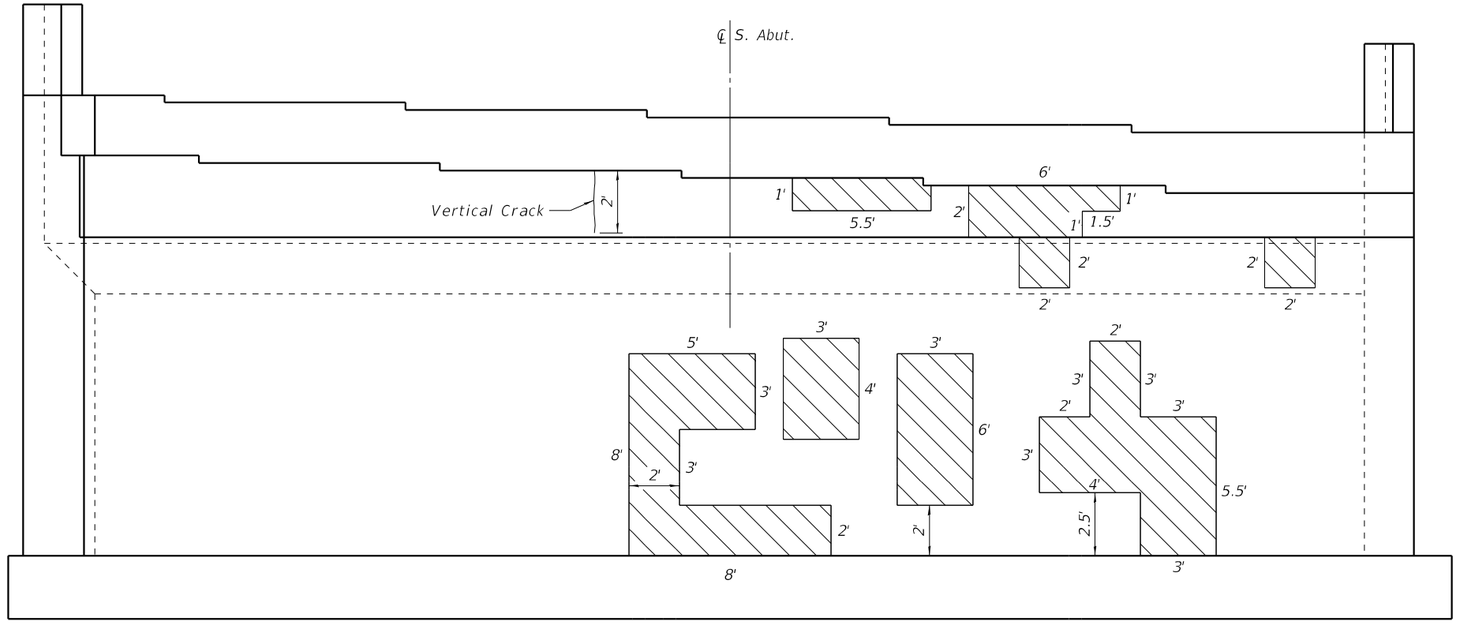

SOUTH ABUTMENT - LOOKING SOUTH

LEGEND

Structural Repair of Concrete (Depth ≤ 5")

BILL OF MATERIAL

	ITEM	UNIT	TOTAL
	Structural Repair of Concrete (Depth ≤ 5")	Sq. Ft.	165
*	Structural Repair of Concrete (Depth > 5")	Sq. Ft.	30

* This pay item shall be used for any applicable repair as determined by the Engineer in the field.

NOTES:

The areas and locations of Structural Repair of Concrete (Depth Equal to or Less than 5") are estimated. The quantity in the Bill of Materials has been increased by 15%.

No areas of Structural Repair of Concrete (Depth Greater than 5") were noted during the abutment inspection. This pay item is a contingency based on 20% of the plan quantity area of Structural Repair of Concrete (Depth Equal to or Less than 5").

All Concrete Removal Regions shall have a ¾" sawcut around perimeter prior to Concrete Removal operations. Cost included in Structural Repair of Concrete (Depth Equal to or Less than 5") or in Structural Repair of Concrete (Depth Greater than 5").

See structural sheet 10 of 10 for Access Panel Retrofit Details.

The abutment survey was completed on 10/9/2023.

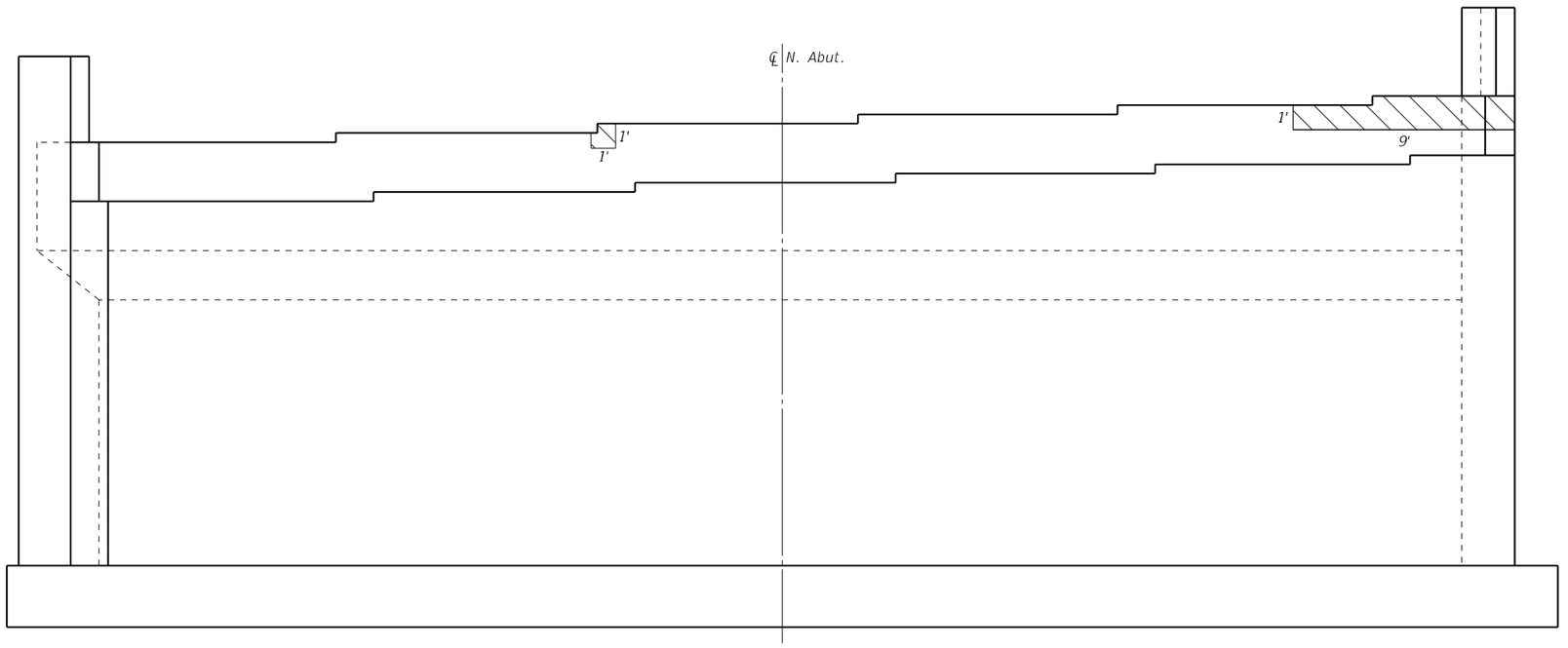

NORTH ABUTMENT - LOOKING NORTH

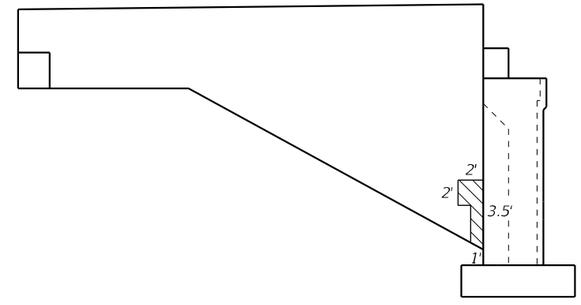

NORTH ABUTMENT - WEST WALL ELEVATION

WILLETT HOFMANN & ASSOCIATES INC
ENGINEERING ARCHITECTURE LAND SURVEYING
809 EAST 2ND STREET, DIXON, IL 61021-0367
T: 815-284-3381 DESIGN FIRM: #184-000918

USER NAME =	DESIGNED - JKP	REVISED -
	CHECKED - DCB	REVISED -
PLOT SCALE =	DRAWN - RDA	REVISED -
PLOT DATE =	CHECKED - DCB	REVISED -

STATE OF ILLINOIS
DEPARTMENT OF TRANSPORTATION

ABUTMENT REPAIRS
STRUCTURE NO. 082-0174
STRUCTURAL SHEET 9 OF 10 SHEETS

F.A.I. RTE.	SECTION	COUNTY	TOTAL SHEETS	SHEET NO.
64	82-(4,5,6,7)-1RS-2	ST. CLAIR	388	347
	WHA# 1155D20	CONTRACT NO. 76R99		
	ILLINOIS	FED. AID PROJECT		

MODEL: Abutment Repairs
FILE NAME: S:\PROJECTS\2020\1155D20_IDOT\D8\DESIGN\CAD_SHEETS\WO 11\08201740820174-D876R99-009-Abutment Repairs.dgn
11/13/2024 1:37:37 PM

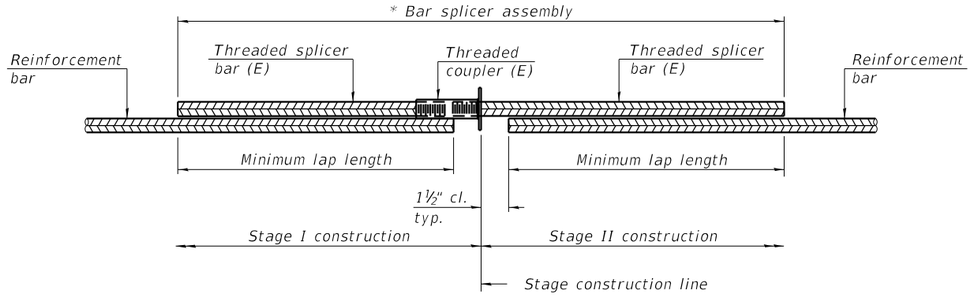

STANDARD BAR SPLICER ASSEMBLY PLAN

Only bar splicer assemblies as presented on the approved QPL list may be used.

Threaded splicer bar length = min. lap length + 1½" + thread length

** Epoxy not required on Bar Splicer Assembly components used in conjunction with black bars.*

Location	Bar size	No. assemblies required	Minimum lap length
Ex. Jt. Replace	#5	12	3'-0"

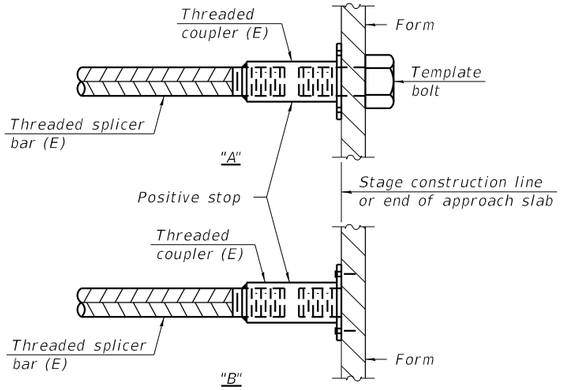

INSTALLATION AND SETTING METHODS

"A" : Set bar splicer assembly by means of a template bolt.
"B" : Set bar splicer assembly by nailing to wood forms or cementing to steel forms.
(E) : Indicates epoxy coating.

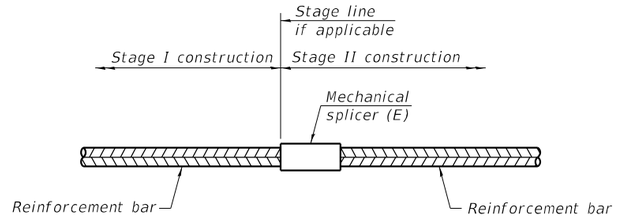

STANDARD MECHANICAL SPLICER

Location	Bar size	No. assemblies required

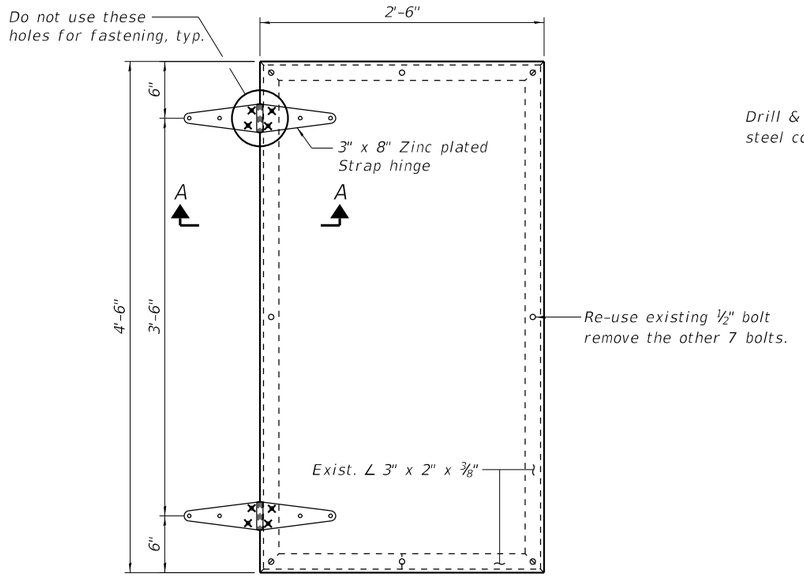

ELEVATION

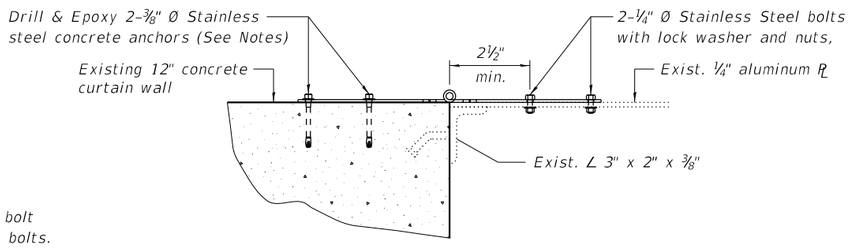

SECTION A-A

BILL OF MATERIAL

	ITEM	UNIT	TOTAL
*	Abutment Vault Door Retrofit	Each	1

** This pay item shall cover all work and materials requitred to install Vault Door hinges as shown. See Special Provision.*

NOTES:

Splicer bars shall be deformed with threaded ends and have a minimum 60 ksi yield strength.

All reinforcement shall be lapped and tied to the splicer bars.

Bar splicer assemblies shall be epoxy coated according to the requirements for reinforcement bars. See Section 508 of the Standard Specifications.

See approved list of bar splicer assemblies and mechanical splicers for alternatives.

Hinges shall be Galvanized in accordance with AASHTO M232 or AASHTO M111.

All structural steel fastener shall be stainless steel hardware and shall be in accordance with Section 1006.31 of the Standard Specifications for Road and Bridge Construction.

Concrete anchors shall be HILTI HIT-HY200 epoxy with ⅜" HIT-Z diameter rod and an effective embedment of 2⅜" or equivalent.

ACCESS VAULT DOOR RETROFIT

WILLETT HOFMANN & ASSOCIATES INC
ENGINEERING ARCHITECTURE LAND SURVEYING
809 EAST 2ND STREET, DIXON, IL 61021-0367
T: 815-284-3381 DESIGN FIRM: #184-000918

USER NAME =	DESIGNED - SAB	REVISED -	
	CHECKED - SAB	REVISED -	
PLOT SCALE =	DRAWN - FDL	REVISED -	
PLOT DATE =	CHECKED - SAB	REVISED -	

STATE OF ILLINOIS
DEPARTMENT OF TRANSPORTATION

BAR SPLICER ASSEMBLY AND ACCESS PANEL RETROFIT DETAILS
STRUCTURE NO. 082-0174
STRUCTURAL SHEET 10 OF 10 SHEETS

F.A.I. RTE.	SECTION	COUNTY	TOTAL SHEETS	SHEET NO.
64	82-(4,5,6,7)-1RS-2	ST. CLAIR	388	348
	WHA# 1155D20	CONTRACT NO. 76R99		
	ILLINOIS	FED. AID PROJECT		

MODEL: Bar Splicer Assembly and Mechanical Splicer Details
FILE NAME: S:\PROJECTS\2020\1155D20_IDOT\D8\DESIGN\CAD_SHEETS\WO 110820174\082O174-D876R99-010-Bar Splicer Assembly and Mechanical Splicer Details.dgn
11/13/2024 1:37:38 PM

EXISTING STRUCTURE: SN 082-0175: Built as Ruby Lane over F.A.I Route 64 in 1970. The superstructure consist of R.C. deck 246'-6" long by 46'-0" wide supported on two span welded plate girder. Two approach spans over vaulted abutment consist of PPC I-beams. and rehabilitated in 2003. Structure to be repaired as detailed in these plans.

Traffic maintained utilizing stage construction.

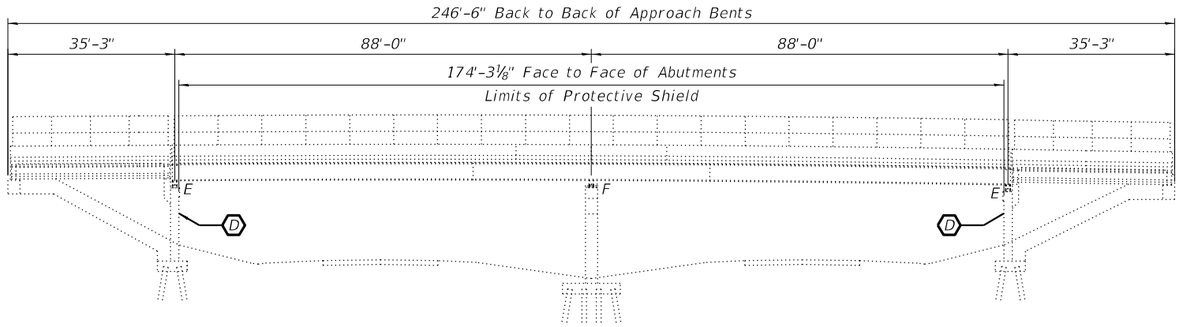

ELEVATION VIEW

BILL OF MATERIAL

	ITEM	UNIT	SUPER	SUB	TOTAL
	Protective Shield	Sq Yd	891	———	891
	Floor Drains	Each	4	———	4
*	Cleaning and Painting Steel Bridge No. 4	L Sum	1	———	1
*	Structural Repair of Concrete (Depth Equal to or Less Than 5 Inches)	Sq Ft	———	1,312	1,312
*	Structural Repair of Concrete (Depth Greater Than 5 Inches)	Sq Ft	———	100	100
*	Deck Slab Repair (Full Depth, Type I)	Sq Yd	15	1	16
*	Deck Slab Repair (Full Depth, Type II)	Sq Yd	15	———	15
*	Deck Slab Repair (Partial)	Sq Yd	30	———	30
*	Silicone Joint Sealer, 2.75	Foot	92	———	92
*	Temporary Shoring and Cribbing	Each	———	2	2
*	Cleaning and Painting Exposed Rebar	L Sum	1	———	1
*	Bridge Deck Concrete Sealer	Sq Ft	12,350	———	12,350
*	Abutment Vault Door Retrofit	Each	1	———	1

*See Special Provisions

INDEX OF SHEETS LOCATION 4

1 General Plan And Elevation
2-3 Staging Details
4 Deck Repair Details
5 Floor Drain Details
6 Joint Replacement Details
7 Abutment Repair Details
8 Access Panel Retrofit Details

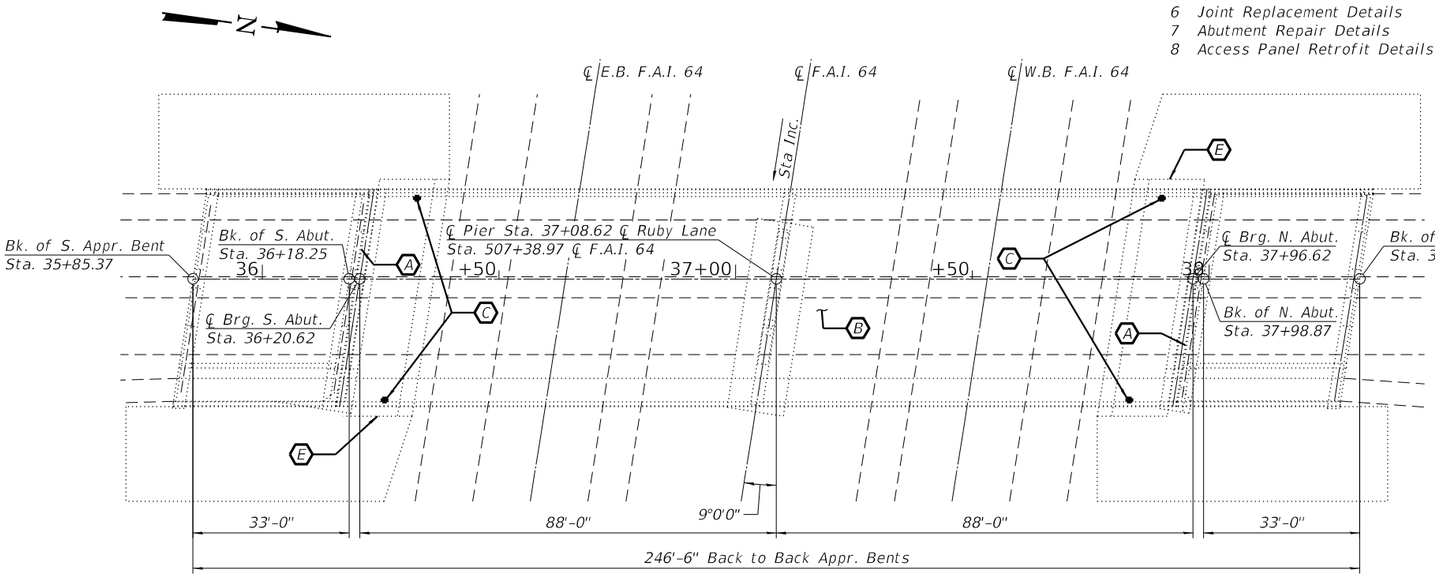

PLAN VIEW

GENERAL NOTES:

This structure will retain the same number: 082-0175.

Two way traffic shall be maintained during rehabilitation of existing structure.

Prior to pouring the new concrete deck section, all heavy or loose rust, loose mill scale, and other loose or potentially detrimental foreign material shall be removed from the surfaces in contact with concrete. Tightly adhered paint may remain unless otherwise noted. Removal shall be accomplished by methods that will not damage the steel and the cost will be included in the pay item covering removal of the existing concrete.

Repair dimensions and locations shown are estimates and will be determined by the Engineer in the field.

The contractor shall provide support and/or shoring systems for the beams in the area of Structural Repair of Concrete to maintain solid bearing during concrete removal. The support shoring system shall be approved by a Licensed Structural Engineer in the State of Illinois.

Joint openings shall be adjusted according to Article 520.04 of the Standard Specifications when the deck is poured at an ambient temperature other than 50° F.

Existing reinforcement bars extending into the removal area shall be cleaned, straightened and incorporated into the new construction. Any reinforcement bars that are damaged during the concrete removal shall be replaced with approved bar splicer or anchorage system. Cost included with Concrete Removal.

Plan dimensions and details relative to the existing structure have been taken from existing plans are Subject to nominal construction variations. The contractor shall field verify existing dimensions and details affecting new construction and make necessary approved adjustments prior to construction or ordering of materials. Such variations shall not be cause for additional compensation for a change in scope of the work, however, the contractor will be paid for the quantity actually furnished at the unit price bid for the work.

Cleaning and painting of the existing steel structural steel is required this structure and shall be performed as specified in the special provisions for "cleaning and painting existing Steel structures." all beams, bearings and other structural steel within 5ft (measured along the beam) of either side of deck joints shall be cleaned per near white blast cleaning SSPC-SP10. The exterior surfaces and bottom of the bottom flange of the fascia beams shall be cleaned per commercial grade Power tool cleaning - SSPC 15.

The designated areas cleaned per near white blast cleaning and per commercial grade power tool cleaning shall be painted according to the requirements of moisture cured urethane paint system. The color of the final finish coat for all interior surfaces shall be Gray, Munsell No. 5B 7/1. The color of the final finish coat for the exterior and bottom flange of the fascia beams shall match the existing paint, which shall be Gray, Munsell No. 5b 7/1.

SSPC QP1 certification is required for this contract.

Bridge deck concrete sealer includes the top of decks, approach slabs, and the front faces and tops of curbs and parapets.

DESIGN STRESSES

FIELD UNITS (EXISTING CONSTRUCTION)

f'c = 3,000 psi (Superstructure - 1970 original)
fy = 40,000 psi (Reinforcement - 1970 original)
fy = 60,000 psi (Reinforcement - 2003 rehab.)

FIELD UNITS (NEW CONSTRUCTION)

f'c = 4,000 psi
fy = 60,000 psi (Reinforcement)

LOADING HS20-44

Allow 25#/sq. ft. for future wearing surface.

DESIGN SPECIFICATIONS (EXISTING)

1996 AASHTO Specifications, with
1997 thru 2000 Interim pecifications

DESIGN SPECIFICATIONS (NEW)

2002 AASHTO Standard Specifications for Highway Bridges, 17th. Edition

SCOPE OF WORK:

(A) Remove existing expansion Preformed Joint Seal at abutments and replace with Silicone joint sealer. See structural sheets 6 of 7.

(B) Deck repair. See structural sheet 4 of 7.

(C) Floor Drain Installation, See structural sheets 5 of 7.

(D) Abutment Repair Details, and location of Temporary Shoring and Cribbing. See structural sheets 7 of 7.

(E) Install Vaulted Abutment Access Panel hardware.

ERIK E. LARSON
081-008533
LICENSED STRUCTURAL ENGINEER OF ILLINOIS

DATE: 1/31/2025
EXPIRES 11/30/26

Range 8W, 3rd P.M.

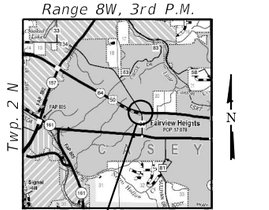

LOCATION SKETCH

GENERAL PLAN AND ELEVATION
F.A.U. 9329 (RUBY LANE)
OVER F.A.I. ROUTE 64
SEC. 82-(4,5,6,7)-1RS-2
ST. CLAIR COUNTY
STATION 37+08.62
STRUCTURE NO. 082-0175

WILLETT HOFMANN & ASSOCIATES INC
ENGINEERING ARCHITECTURE LAND SURVEYING
809 EAST 2ND STREET, DIXON, IL 61021-0367
T: 815-284-3381 DESIGN FIRM: #184-000918

USER NAME =	DESIGNED - SM	REVISED -	
	CHECKED - DCB	REVISED -	
PLOT SCALE =	DRAWN - FDL	REVISED -	
PLOT DATE =	CHECKED - DCB	REVISED -	

STATE OF ILLINOIS
DEPARTMENT OF TRANSPORTATION

STRUCTURAL SHEET 1 OF 8 SHEETS

F.A.I. RTE.	SECTION	COUNTY	TOTAL SHEETS	SHEET NO.
64	82-(4,5,6,7)-1RS-2	ST. CLAIR	388	349
	WHA# 1155D20	CONTRACT NO. 76R99		
	ILLINOIS	FED. AID PROJECT		

MODEL: GPE
FILE NAME: S:\PROJECTS\2020\1155D20_IDOT\D8\DESIGN\CAD_SHEETS\WO 11\082017501082017501-D876R99-001-GPE.dgn

2/5/2025 1:06:53 PM

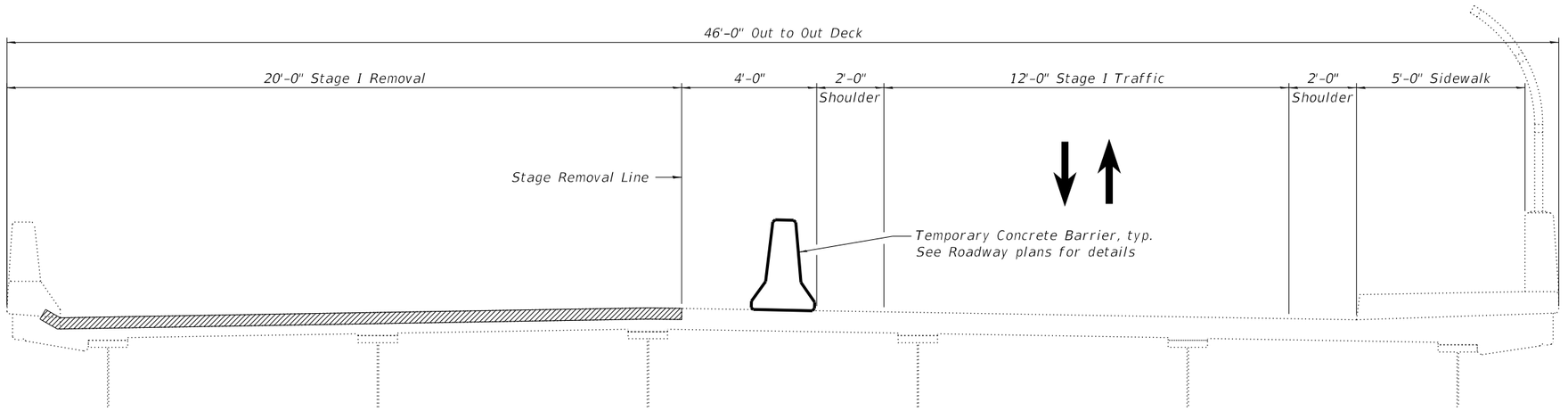

CROSS SECTION - STAGE I REMOVAL

(Looking North)

LEGEND

Removal at joint location only.
See Structural sheet 6 of 7.

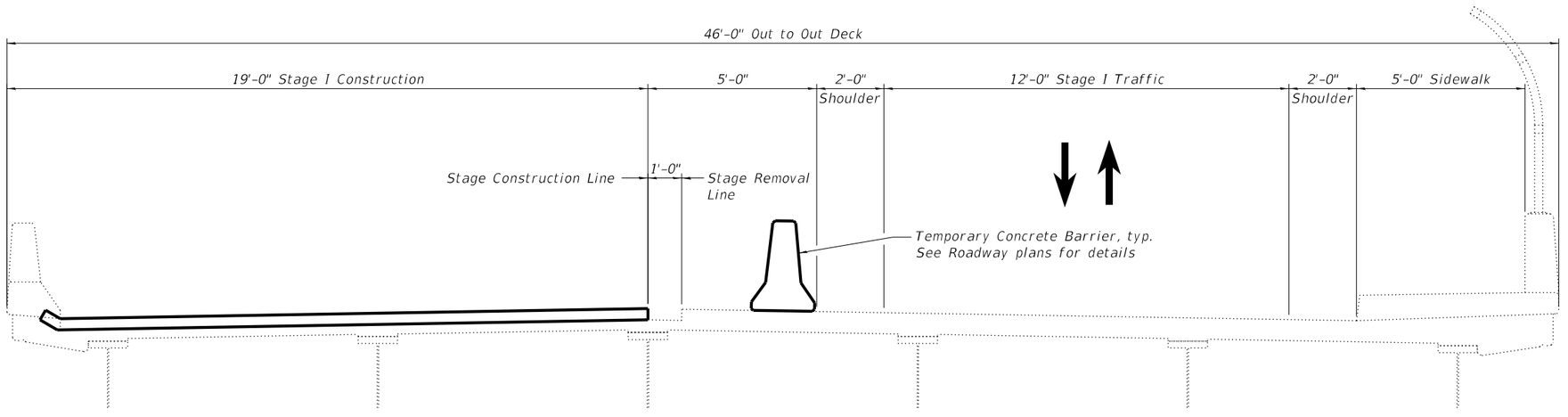

CROSS SECTION - STAGE I CONSTRUCTION

(Looking North)

MODEL: Staging Details
FILE NAME: S:\PROJECTS\2020\1155D20_IDOTD8\DESIGN\CAD_SHEETS\WO 11\08201750820175-D876R99-002-StgDtls.dgn

11/13/2024 1:37:42 PM

WILLETT HOFMANN & ASSOCIATES INC
ENGINEERING ARCHITECTURE LAND SURVEYING
809 EAST 2ND STREET, DIXON, IL 61021-0367
T: 815-284-3381 DESIGN FIRM: #184-000918

USER NAME =	DESIGNED - SM	REVISED -	
	CHECKED - DCB	REVISED -	
PLOT SCALE =	DRAWN - TJA	REVISED -	
PLOT DATE =	CHECKED - DCB	REVISED -	

STATE OF ILLINOIS
DEPARTMENT OF TRANSPORTATION

STAGING DETAILS
STRUCTURE NO. 082-0175
STRUCTURAL SHEET 2 OF 8 SHEETS

F.A.I. RTE.	SECTION	COUNTY	TOTAL SHEETS	SHEET NO.
64	82-(4,5,6,7)-1RS-2	ST. CLAIR	388	350
	WHA# 1155D20	CONTRACT NO. 76R99		
	ILLINOIS	FED. AID PROJECT		

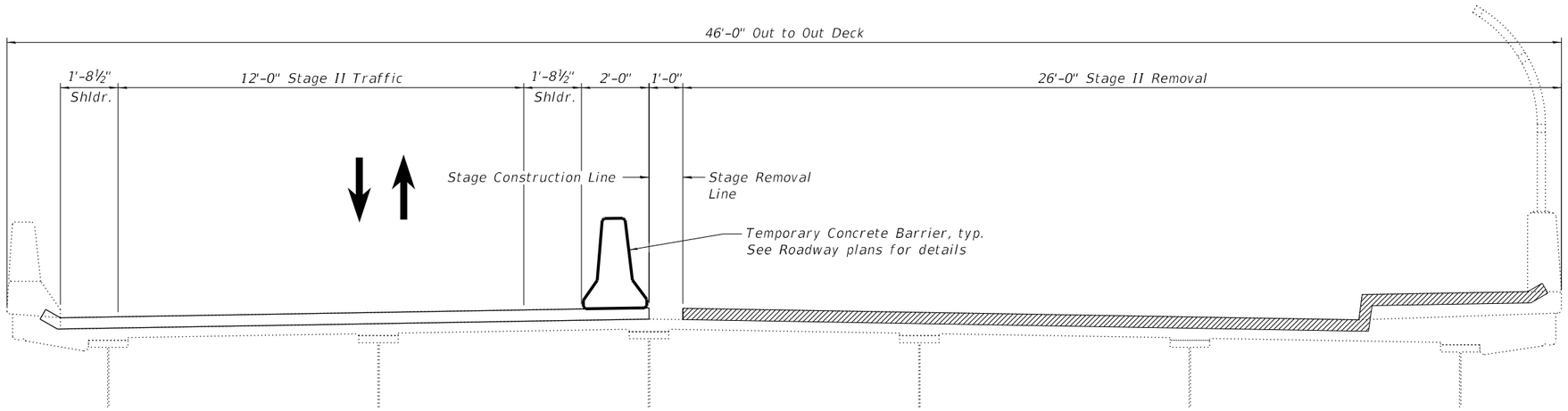

CROSS SECTION - STAGE II REMOVAL

(Looking North)

LEGEND

Removal at joint location only.
See Structural sheet 6 of 7.

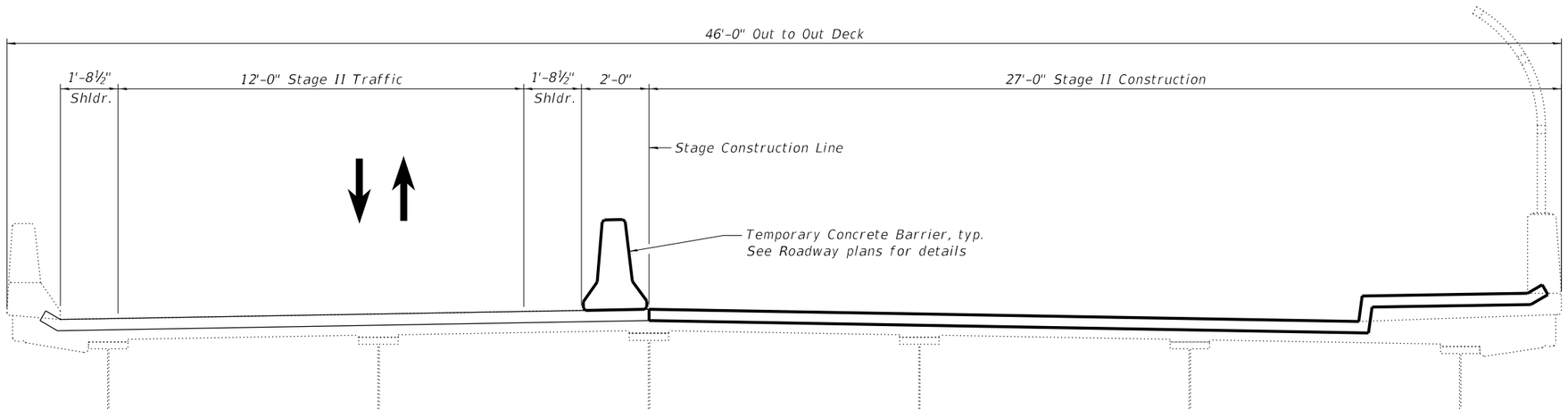

CROSS SECTION - STAGE II CONSTRUCTION

(Looking North)

MODEL: Staging Details
FILE NAME: S:\PROJECTS\2020\1155D20_IDOTD8\DESIGN\CAD_SHEETS\WO 11\08201750820175-D876F699-003-StgDtls.dgn
11/13/2024 1:37:43 PM

WILLETT HOFMANN & ASSOCIATES INC
ENGINEERING ARCHITECTURE LAND SURVEYING
809 EAST 2ND STREET, DIXON, IL 61021-0367
T: 815-284-3381 DESIGN FIRM: #184-000918

USER NAME =	DESIGNED - SM	REVISED -
	CHECKED - DCB	REVISED -
PLOT SCALE =	DRAWN - TJA	REVISED -
PLOT DATE =	CHECKED - DCB	REVISED -

STATE OF ILLINOIS
DEPARTMENT OF TRANSPORTATION

STAGING DETAILS
STRUCTURE NO. 082-0175
STRUCTURAL SHEET 3 OF 8 SHEETS

F.A.I. RTE.	SECTION	COUNTY	TOTAL SHEETS	SHEET NO.
64	82-(4,5,6,7)-1RS-2	ST. CLAIR	388	351
	WHA# 1155D20	CONTRACT NO. 76R99		
	ILLINOIS	FED. AID PROJECT		

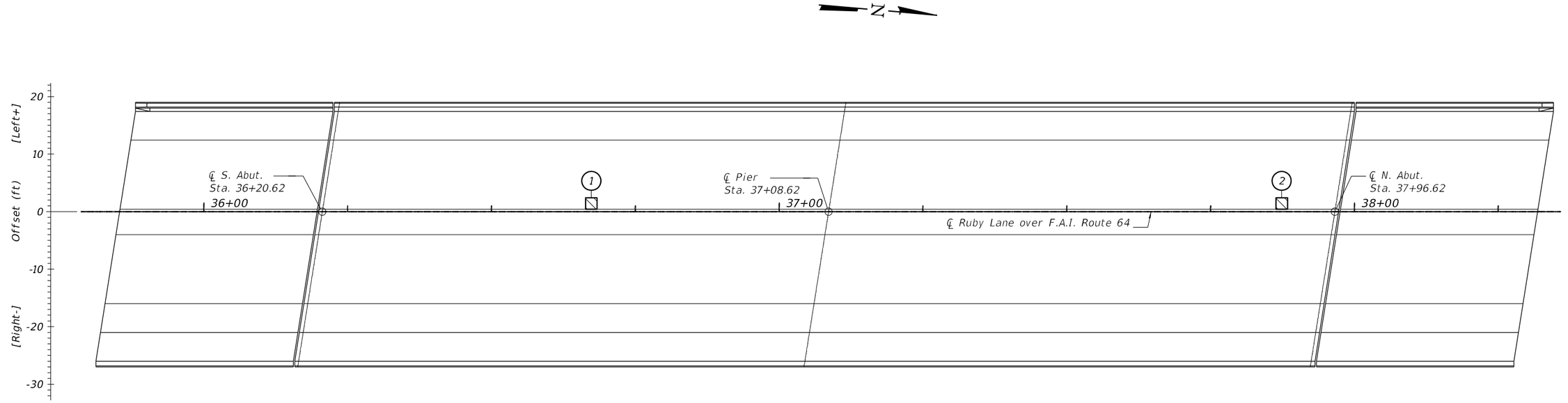

PLAN VIEW

LEGEND

Deck Slab Repair (Partial)

DECK PATCHES

	Start Sta.	End Sta.	Offsets (ft) From	Offsets (ft) To	Length (ft.)	Width (ft.)	Area (Sq. Yd.)	Full or Partial Depth
1	36+66	36+68	0.42 ft.	2.42 ft.	2	2	0.44	P
2	37+86	37+88	0.42 ft.	2.42 ft.	2	2	0.44	P

BILL OF MATERIAL

ITEM	UNIT	TOTAL
Deck Slab Repair (Full Depth, Type I)	Sq. Yd.	15
Deck Slab Repair (Full Depth, Type II)	Sq. Yd.	15
Deck Slab Repair (Partial)	Sq. Yd.	30

NOTES:

The areas of deck repairs are estimated. The deck survey and schedule shows 0.9 Sq. yds. of full depth deck slab repairs. Plan quantities have been increased to 30 Sq. Yds.

The Engineer shall show actual patch locations on as-built plans.

Deck Survey 10-10-23.

No areas of Deck Slab Repair (Full Depth, Type I) or Deck Slab Repair (Full Depth, Type II) were noted during the deck inspection. These pay items are contingencies based on 50% of the plan quantity area of Deck Slab Repair (Partial). If required, the Engineer shall determine the limits of these pay items in the field.

WILLETT HOFMANN & ASSOCIATES INC
ENGINEERING ARCHITECTURE LAND SURVEYING
809 EAST 2ND STREET, DIXON, IL 61021-0367
T: 815-284-3381 DESIGN FIRM: #184-000918

USER NAME =	DESIGNED - SM	REVISED -
	CHECKED - DCB	REVISED -
PLOT SCALE =	DRAWN - RDA	REVISED -
PLOT DATE =	CHECKED - DCB	REVISED -

STATE OF ILLINOIS
DEPARTMENT OF TRANSPORTATION

DECK PATCHES - TOP SIDE
STRUCTURE NO. 082-0175
STRUCTURAL SHEET 4 OF 8 SHEETS

F.A.I. RTE.	SECTION	COUNTY	TOTAL SHEETS	SHEET NO.
64	82-(4,5,6,7)-1RS-2	ST. CLAIR	388	352
	WHA# 1155D20	CONTRACT NO. 76R99		
	ILLINOIS FED. AID PROJECT			

MODEL: Deck Patches Top Side
FILE NAME: S:\PROJECTS\2020\1155D20_IDOT\D8\DESIGN\CAD_SHEETS\WO 11\082017\0820175-D876R99-004-Deck Patches Top Side.dgn
11/13/2024 1:37:43 PM

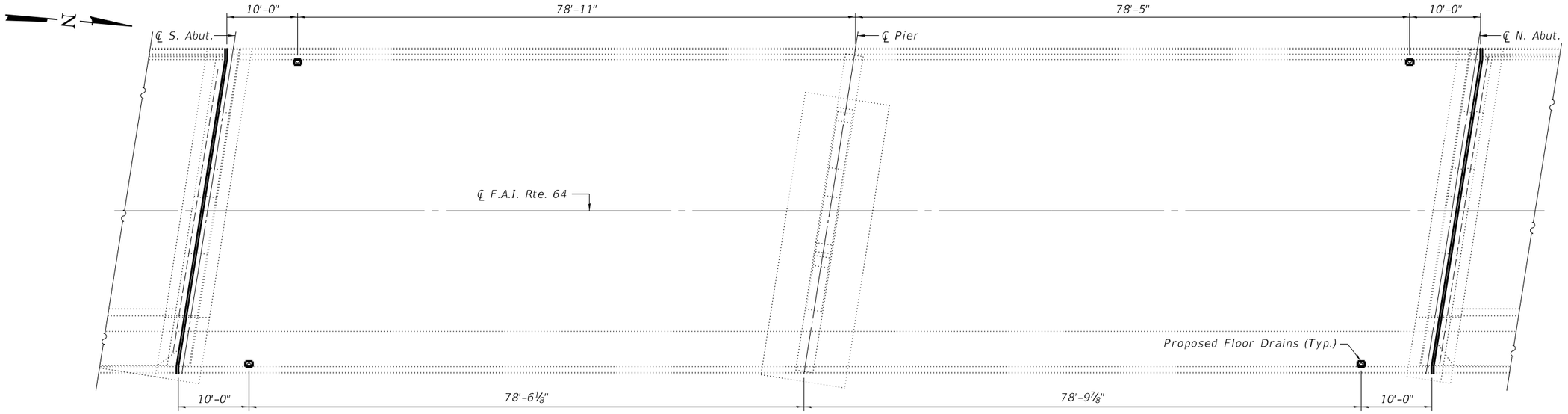

PLAN VIEW

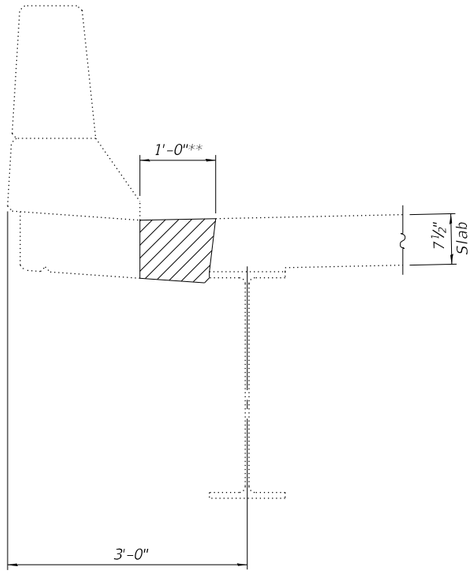

SECTION THRU DECK

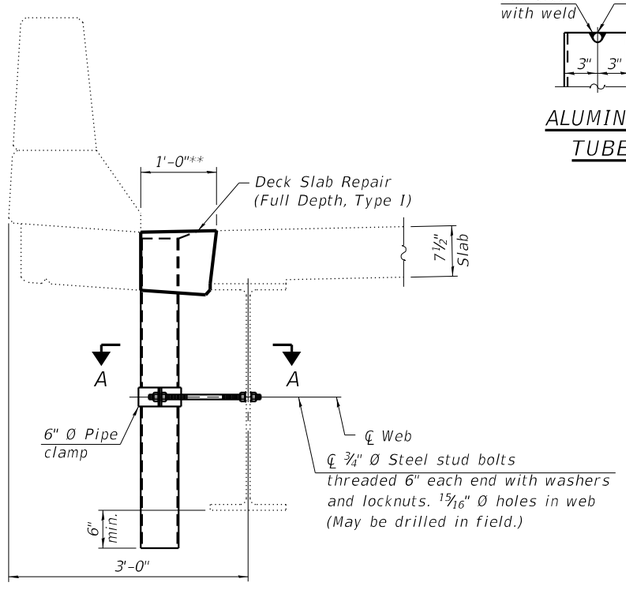

DRAIN REPLACEMENT DETAIL

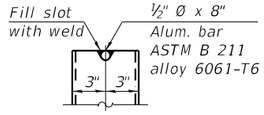

ALUMINUM TUBE

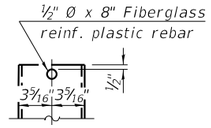

FIBERGLASS PIPE

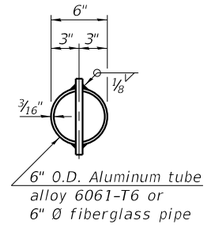

TOP PLAN
(Showing aluminum tube)

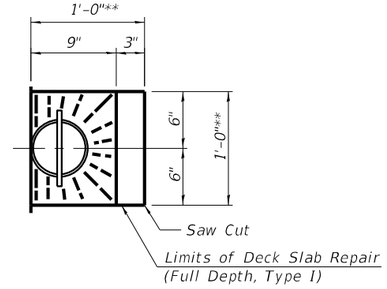

TOP PLAN DECK REPAIR AT PROPOSED DRAINS

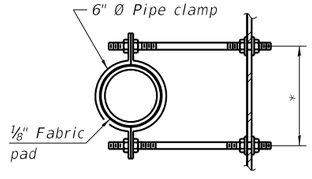

SECTION A-A
*Dimension as required by pipe clamp

**Acutal dimensions of Deck Slab Repair shall be determined by the Field Engineer

NOTES:

Fiberglass pipe shall conform to ASTM D2996, with short-time rupture strength hoop tensile stress of 30,000 p.s.i. minimum.

The exterior surfaces of the floor drains shall be painted according to Article 506 with the finish coat as specified. The exterior surfaces of the drains shall be cleaned according to the Society of Protective Coating's Spec. SSPC-SP1 prior to painting.

The top portion of aluminum floor drains shall be coated to minimize reaction with wet concrete.

The clamping device shall be galvanized according to AASHTO M 232. Cost of clamping device included with Floor Drains.

Drains shall be located clear of all diaphragms.

BILL OF MATERIAL

ITEM	UNIT	TOTAL
Floor Drains	Each	4
Deck Slab Repair (Full Depth, Type I)	Sq. Yd.	1

MODEL: Floor Drain Details
FILE NAME: S:\PROJECTS\2020\1155D20_IDOT\D8\DESIGN\CAD_SHEETS\WO 11\08201750820175-D876R99-005-FloorDrainDtl.dgn

11/13/2024 1:37:44 PM

WILLETT HOFMANN & ASSOCIATES INC
ENGINEERING ARCHITECTURE LAND SURVEYING
809 EAST 2ND STREET, DIXON, IL 61021-0367
T: 815-284-3381 DESIGN FIRM: #184-000918

USER NAME =	DESIGNED - SM	REVISED -	
	CHECKED - DCB	REVISED -	
PLOT SCALE =	DRAWN - FDL	REVISED -	
PLOT DATE =	CHECKED - DCB	REVISED -	

STATE OF ILLINOIS
DEPARTMENT OF TRANSPORTATION

FLOOR DRAIN DETAILS
STRUCTURE NO. 082-0175
STRUCTURAL SHEET 5 OF 8 SHEETS

F.A.I. RTE.	SECTION	COUNTY	TOTAL SHEETS	SHEET NO.
64	82-(4,5,6,7)-1RS-2	ST. CLAIR	388	353
	WHA# 1155D20	CONTRACT NO. 76R99		
	ILLINOIS	FED. AID PROJECT		

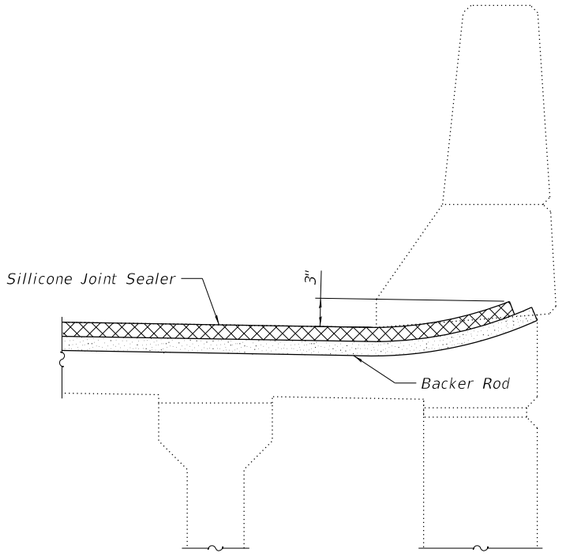

PARAPET DETAIL

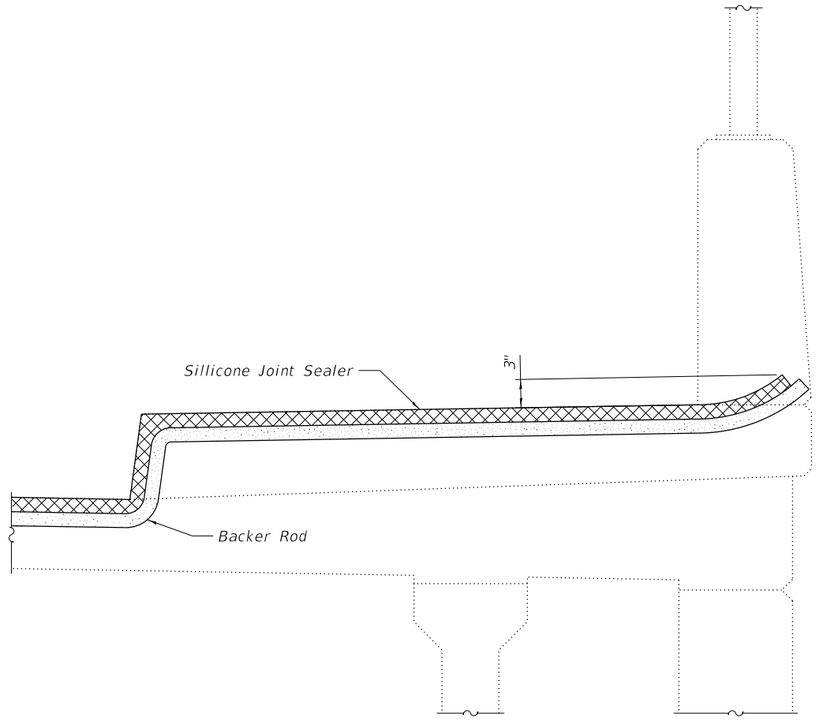

SIDEWALK DETAIL

(Median Similar)

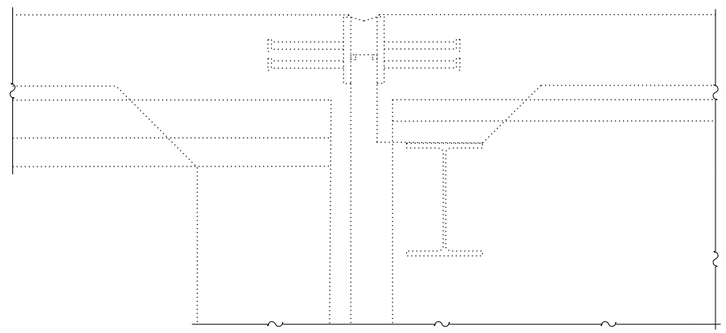

EXISTING SECTION THRU ABUTMENT

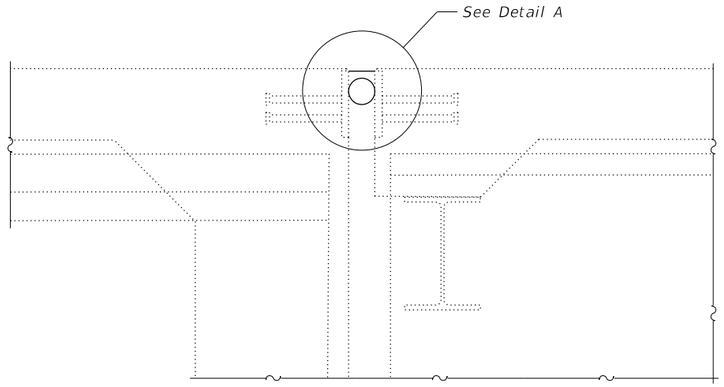

PROPOSED SECTION THRU ABUTMENT

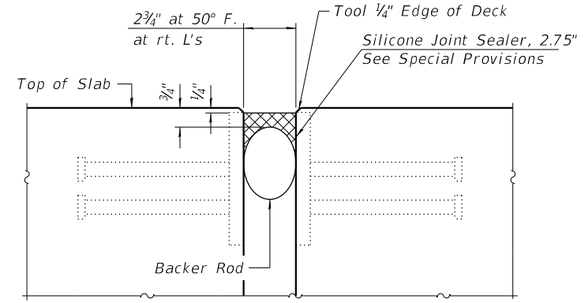

DETAIL A

BILL OF MATERIAL

ITEM	UNIT	TOTAL
Silicone Joint Sealer, 2.75"	Foot	92

NOTES:

Cost of the removal of existing joints will not be measured for payment and will be included in the contract unit price per feet for Silicone Joint Sealer, 2.75".

WILLETT HOFMANN & ASSOCIATES INC
ENGINEERING ARCHITECTURE LAND SURVEYING
809 EAST 2ND STREET, DIXON, IL 61021-0367
T: 815-284-3381 DESIGN FIRM: #184-000918

USER NAME =	DESIGNED - SM	REVISED -	
	CHECKED - DCB	REVISED -	
PLOT SCALE =	DRAWN - FDL	REVISED -	
PLOT DATE =	CHECKED - DCB	REVISED -	

STATE OF ILLINOIS
DEPARTMENT OF TRANSPORTATION

JOINT REPLACEMENT DETAILS
STRUCTURE NO. 082-0175

STRUCTURAL SHEET 6 OF 8 SHEETS

F.A.I. RTE.	SECTION	COUNTY	TOTAL SHEETS	SHEET NO.
64	82-(4,5,6,7)-1RS-2	ST. CLAIR	388	354
	WHA# 1155D20	CONTRACT NO. 76R99		
	ILLINOIS FED. AID PROJECT			

MODEL: Joint Replacement Details
FILE NAME: S:\PROJECTS\2020\1155D20_IDOTDB\DESIGN\CAD_SHEETS\WO 11\082017S\082017S_DB76R99-006-JtReplacemntDtl.dgn

11/13/2024 1:37:44 PM

LEGEND

Structural Repair of Concrete (Depth < 5")

Structural Repair of Concrete (Depth Greater than 5 Inches)

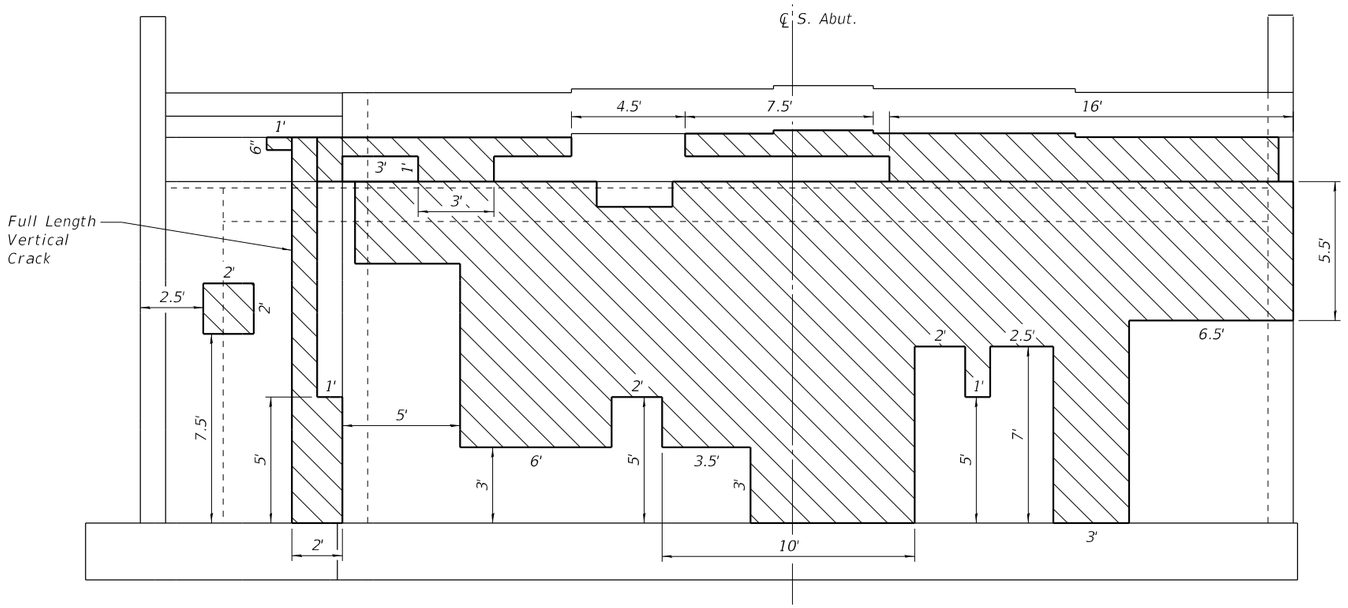

SOUTH ABUTMENT

(Looking South)

BILL OF MATERIAL

ITEM	UNIT	TOTAL
Structural Repair of Concrete (Depth Equal to or Less than 5 inches)	Sq. Ft.	1,312
Structural Repair of Concrete (Depth Greater than 5 inches)	Sq. Ft.	100
Temporary Shoring and Cribbing	Each	2

NOTES:

The Engineer shall show actual patch locations on as-built plans.

The areas and locations of Structural Repair of Concrete (Depth Equal to or Less than 5") and Structural Repair of Concrete (Depth Greater than 5") are estimated. The quantity in the Bill of Materials has been increased by approximately 100%.

All Concrete Removal Regions shall have a ¾" sawcut around perimeter prior to Concrete Removal operations. Cost included in Structural Repair of Concrete (Depth Equal to or Less than 5") or in Structural Repair of Concrete (Depth Greater than 5").

The Abutment Survey was complete on 10-10-23.

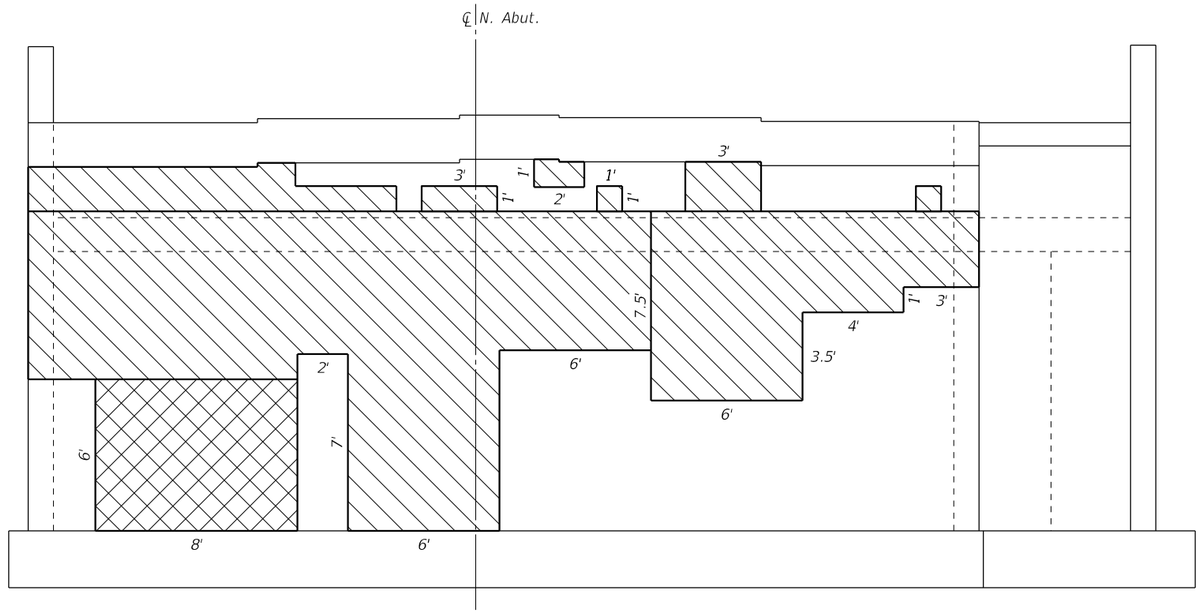

NORTH ABUTMENT

(Looking North)

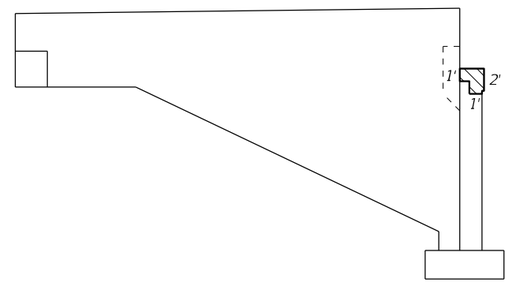

NORTH ABUTMENT - WEST WALL ELEVATION

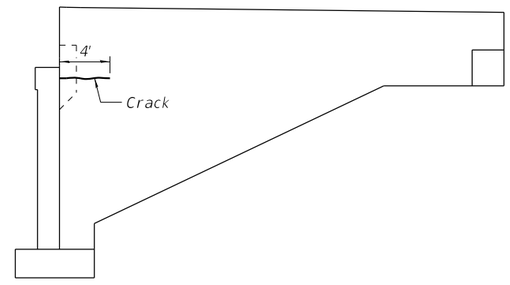

NORTH ABUTMENT - EAST WALL ELEVATION

WILLETT HOFMANN & ASSOCIATES INC
ENGINEERING ARCHITECTURE LAND SURVEYING
809 EAST 2ND STREET, DIXON, IL 61021-0367
T: 815-284-3381 DESIGN FIRM: #184-000918

USER NAME =	DESIGNED - SM	REVISED -
	CHECKED - DCB	REVISED -
PLOT SCALE =	DRAWN - RDA	REVISED -
PLOT DATE =	CHECKED - DCB	REVISED -

STATE OF ILLINOIS
DEPARTMENT OF TRANSPORTATION

ABUTMENT REPAIRS
STRUCTURE NO. 082-0175
STRUCTURAL SHEET 7 OF 8 SHEETS

F.A.I. RTE.	SECTION	COUNTY	TOTAL SHEETS	SHEET NO.
64	82-(4,5,6,7)-1RS-2	ST. CLAIR	388	355
	WHA# 1155D20	CONTRACT NO. 76R99		
	ILLINOIS	FED. AID PROJECT		

MODEL: Abutment Repairs
FILE NAME: S:\PROJECTS\2020\1155D20_IDOT\D8\DESIGN\CAD_SHEETS\WO 11\08201750820175-D876R99-007-AbutRepairs.dgn

11/13/2024 1:37:45 PM

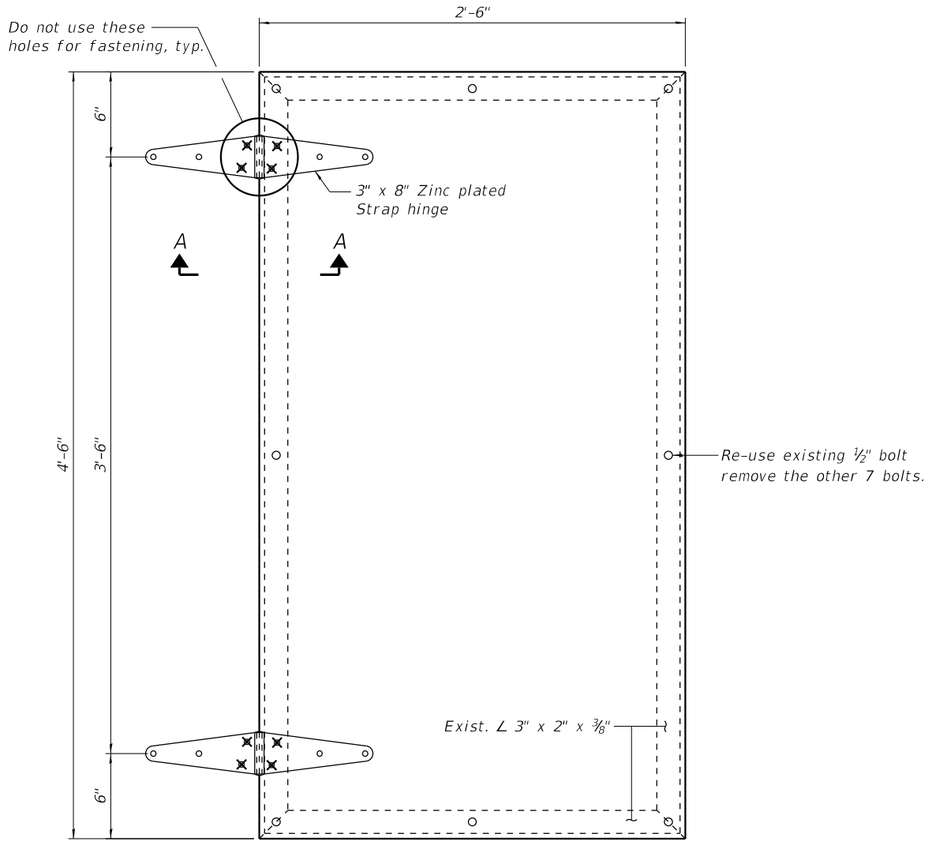

ELEVATION

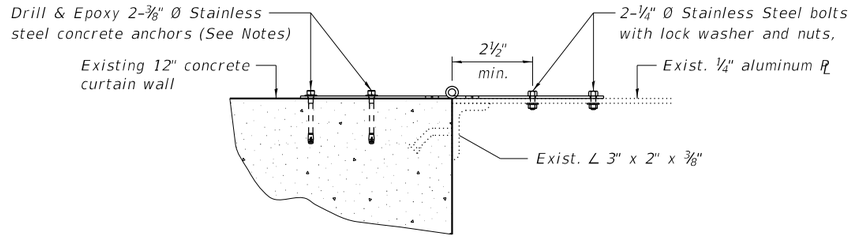

SECTION A-A

BILL OF MATERIAL

	ITEM	UNIT	TOTAL
*	Furnishing and Erecting Structural Steel	Pound	5

* This pay item shall be used for any applicable repair as determined by the Engineer in the field.

NOTES:

Hinges shall be Galvanized in accordance with AASHTO M232 or AASHTO M111.

All structural steel fastener shall be stainless steel hardware and shall be in accordance with Section 1006.31 of the Standard Specifications for Road and Bridge Construction.

Concrete anchors shall be HILTI HIT-HY200 epoxy with ⅜" HIT-Z diameter rod and an effective embedment of 2⅜" or equivalent.

MODEL: Abutment Repairs
FILE NAME: S:\PROJECTS\2020\1155D20_IDOTDB\DESIGN\CAD_SHEETS\WO 11\08201175\08201175-D876R99-008-AccPnlRetroDtl.dgn
11/13/2024 1:37:45 PM

WILLETT HOFMANN & ASSOCIATES INC
ENGINEERING ARCHITECTURE LAND SURVEYING
809 EAST 2ND STREET, DIXON, IL 61021-0367
T: 815-284-3381 DESIGN FIRM: #184-000918

USER NAME =	DESIGNED - SM	REVISED -	
	CHECKED - DCB	REVISED -	
PLOT SCALE =	DRAWN - FDL	REVISED -	
PLOT DATE =	CHECKED - DCB	REVISED -	

STATE OF ILLINOIS
DEPARTMENT OF TRANSPORTATION

ACCESS PANEL RETROFIT DETAILS
STRUCTURE NO. 082-0175
STRUCTURAL SHEET 8 OF 8 SHEETS

F.A.I. RTE.	SECTION	COUNTY	TOTAL SHEETS	SHEET NO.
64	82-(4,5,6,7)-1RS-2	ST. CLAIR	388	356
	WHA# 1155D20	CONTRACT NO. 76R99		
	ILLINOIS	FED. AID PROJECT		

EXISTING STRUCTURE: S.N. 082-0176: Built as F.A.I Route 64 Sec. 82-5HB-3 in 1972 and widened in 1998 as F.A.P. Route 600 Sec. 82-5K-1
The existing structure is a reinforced concrete deck on two span continuous welded $\underline{\mathrm{P}}$ girder supported on sand filled vaulted abutment sand pile supported spalling-column pier. 231'-6" Back to Back of approach bents. 98'-0" Out to Out of Deck. Structure was widened in 2012 on the west side and retaining walls were constructed on south side. (108'-7" Out to Out of Deck)
Traffic maintained utilizing stage construction.

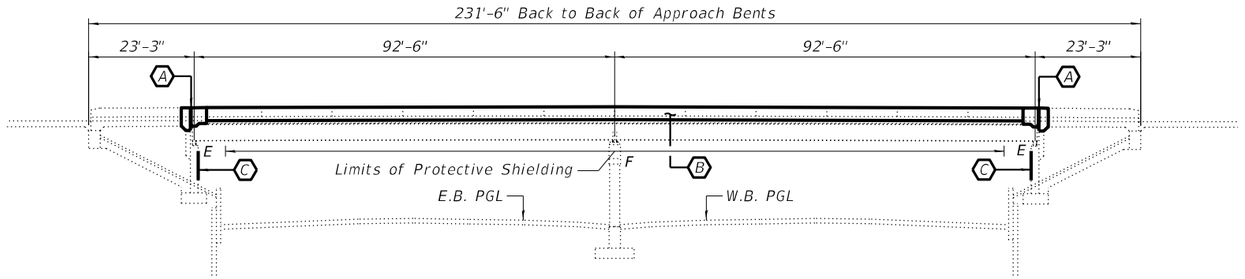

ELEVATION VIEW

TOTAL BILL OF MATERIAL

	ITEM	UNIT	SUPER	SUB	TOTAL
	Concrete Removal	Cu. Yd.	47.2	———	47.2
	Protective Shield	Sq. Yd.	1,896	———	1,896
	Concrete Superstructure	Cu. Yd.	47.2	———	47.2
	Reinforcement Bars, Epoxy Coated	Pound	2,240	———	2,240
	Bar Splicers	Each	48	———	48
	Preformed Joint Strip Seal	Foot	219	———	219
*	Bridge Deck Latex Concrete Overlay 3¼"	Sq. Yd.	2,042	———	2,042
*	Cleaning and Painting Steel Bridge, No. 5	L. Sum	1	———	1
*	Bridge Deck Scarification 3"	Sq. Yd.	2,042	———	2,042
*	Structural Repair of Concrete (Depth Equal to or Less than 5 Inches)	Sq. Ft.	310	198	508
*	Structural Repair of Concrete (Depth Greater than 5 Inches)	Sq. Ft.	31	20	51
*	Deck Slab Repair (Full Depth, Type I)	Sq. Yd.	29	———	29
*	Deck Slab Repair (Full Depth, Type II)	Sq. Yd.	52	———	52
*	Diamond Grinding (Bridge Section)	Sq. Yd.	1,990	———	1,990
*	Acrylic Coating	Sq. Yd.	35	———	35
*	Bridge Deck Grooving (Longitudinal)	Sq. Yd.	1,825	———	1,825
*	Cleaning and Painting Exposed Rebar	L. Sum	———	———	1
*	Bridge Deck Concrete Sealer	Sq. Ft.	19,479	———	19,479

See Special Provisions

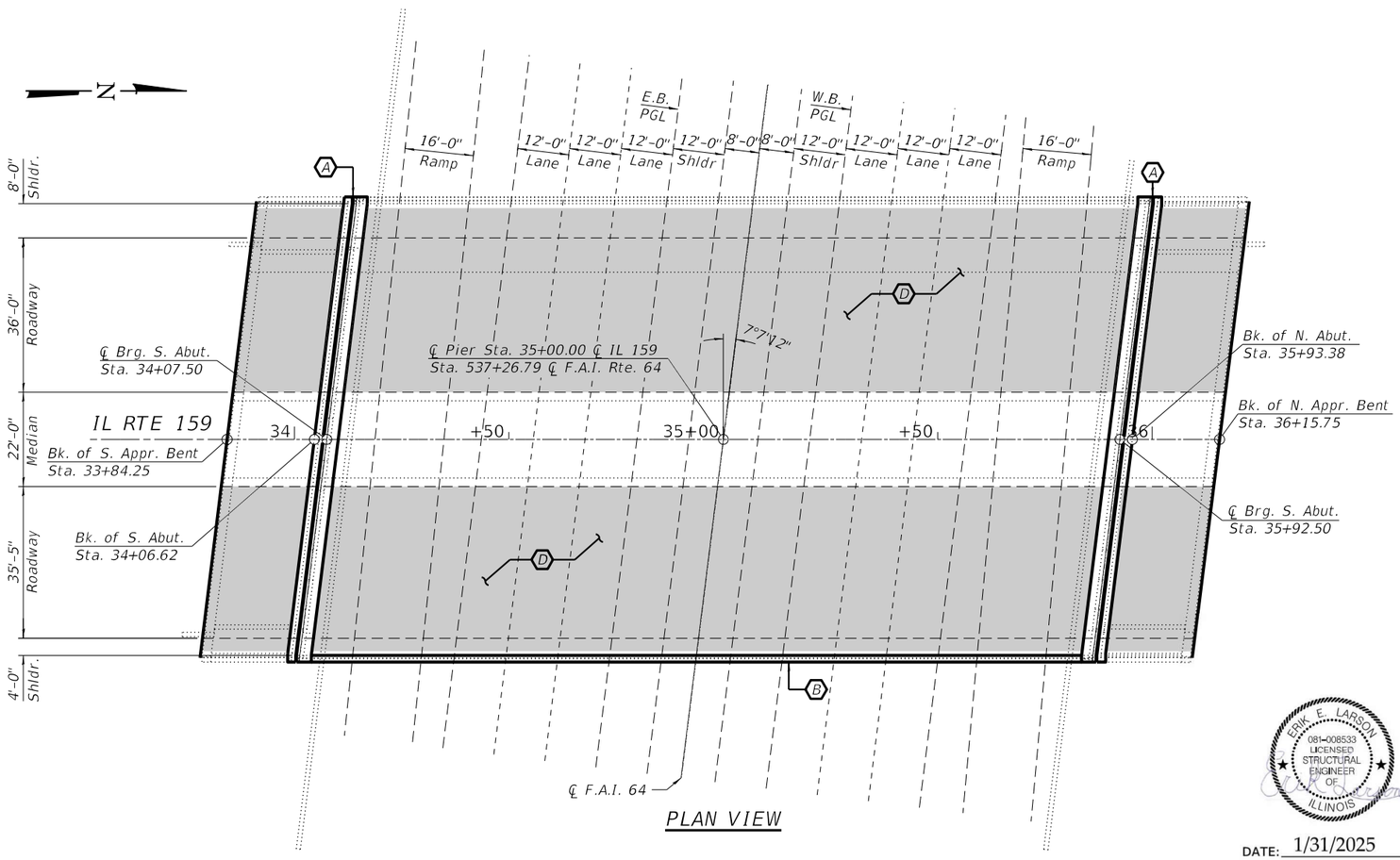

PLAN VIEW

INDEX OF SHEETS LOCATION 5

1 General Plan and Elevation
2 General Data
3-4 Staging Details
5-6 Deck Patches
7 Abutment Joint Replacement Details
8 Joint Replacement and Repair Details
9 Preformed Joint Strip Seal
10 Parapet Repairs
11 Abutment Repairs
12 Bar Splicer Assembly and Mechanical Splicer Details

SCOPE OF WORK:

(A) Remove existing neoprene expansion joints at abutments and replace with preformed joint strip sealer. See Structural Sheets 8 of 10.

(B) Perform Structural Repair of Concrete.

(C) Structural concrete repairs at abutment. See Structural Sheets 10 of 10.

(D) Perform bridge deck Scarification and Latex overlay.

ERIK E. LARSON 081-008533 LICENSED STRUCTURAL ENGINEER OF ILLINOIS

DATE: 1/31/2025
EXPIRES 11/30/26

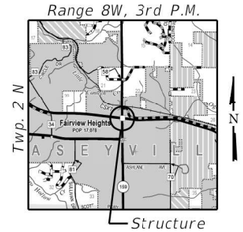

LOCATION SKETCH

GENERAL PLAN AND ELEVATION
IL 159 OVER F.A.I. ROUTE 64
SEC. 82-(4,5,6,7)-1RS-2
ST. CLAIR COUNTY
STATION 684+74.22
S.N. 082-0176

WILLETT HOFMANN & ASSOCIATES INC
ENGINEERING ARCHITECTURE LAND SURVEYING
809 EAST 2ND STREET, DIXON, IL 61021-0367
T: 815-284-3381 DESIGN FIRM: #184-000918

USER NAME =	DESIGNED - EEL	REVISED - ⚠1 1-7-25 EEL	
	CHECKED - DCB	REVISED -	
PLOT SCALE =	DRAWN - FDL	REVISED -	
PLOT DATE =	CHECKED - EEL	REVISED -	

STATE OF ILLINOIS
DEPARTMENT OF TRANSPORTATION

STRUCTURAL SHEET 1 OF 12 SHEETS

F.A.I. RTE.	SECTION	COUNTY	TOTAL SHEETS	SHEET NO.
64	82-(4,5,6,7)-1RS-2	ST. CLAIR	388	357
	WHA# 1155D20	CONTRACT NO. 76R99		
	ILLINOIS FED. AID PROJECT			

MODEL: GPE
FILE NAME: S:\PROJECTS\2020\1155D20_IDOT\D8\DESIGN\CAD_SHEETS\WO 111082017610820176\D8767R99-001-GPE.dgn
2/5/2025 1:07:03 PM

GENERAL NOTES:

This structure will retain the same number: 082-0176.

Two way traffic shall be maintained during rehabilitation of existing structure.

Prior to pouring the new concrete latex deck surface, all heavy or loose rust, loose mill scale, and other loose or potentially detrimental foreign material shall be removed from the surfaces.

Repair dimensions and locations shown are estimates and the final areas will be determined by the Engineer in the field.

Concrete parapet, deck, and abutment repair areas shown in the drawings for S.N. 082-0176 are estimated based on inspection data from October 2023.

It is expected that the actual repair areas may be different in shape, size, and location than shown on the drawings. The exact locations shall be determined by the Engineer. The Engineer shall show actual repair areas and their dimensions on AS-BUILT-PLANS.

Extreme caution shall be exercised while removing concrete adjacent to beams. Any Damage to Beams shall be repaired at the Contractor's expense.

Existing reinforcement bars exposed during construction shall be field coated with epoxy at the discretion of the Engineer in accordance with manufacturer of epoxy system.

Joint openings shall be adjusted according to Article 520.04 of the Standard Specifications when the polymer concrete nosing is poured at an ambient temperature other than 50°F.

Existing reinforcement bars extending into the removal area shall be cleaned, straightened and incorporated into the new construction. Any reinforcement bars that are damaged during the concrete removal shall be replaced with approved bar splicer or anchorage system. Cost included with Concrete Removal.

Deck slab repair (Full Depth, Type I) has a contingency quantity. If required, the limits shall be determined by the Engineer in field.

After removal of the joints, and prior to the concrete pour, all existing beams, bearings and other structural steel within 3' of the end of the beams (measured along the beam) at the abutments shall be cleaned and painted as specified in the Special Provision "Cleaning and Painting Existing Steel Structures". The designated areas shall be cleaned per SSPC-SP15. Commercial Grade Power Tool Cleaning using vacuum shrouded power tools with HEPA filtration. All areas cleaned shall be primed with an organic zinc rich primer between 3.5 and 5.0 mils(90 and 125 microns) dry film thickness.

Up to ¼" may be ground off the bridge deck and the bridge approach slabs.

Plan dimensions and details relative to the existing structure have been taken from existing plans are Subject to nominal construction variations. The contractor shall field verify existing dimensions and details affecting new construction and make necessary approved adjustments prior to construction or ordering of materials. Such variations shall not be cause for additional compensation for a change in scope of the work, however, the contractor will be paid for the quantity actually furnished at the unit price bid for the work.

Cleaning and painting of the existing steel structural steel is required for this structure and shall be performed as specified in the special provisions for "cleaning and painting existing Steel structures." all beams, bearings and other structural steel within 5ft (measured along the beam) of either side of deck joints shall be cleaned per near white blast cleaning SSPC-SP10. The exterior Surfaces and bottom of the bottom flange of the fascia beams shall be cleaned per commercial grade Power tool cleaning – SSPC 15.

The designated areas cleaned per near white blast cleaning and per commercial grade power tool cleaning shall be painted according to the requirements of moisture cured urethane paint system. The color of the final finish coat for all interior surfaces shall be Gray, Munsell No. 5B 7/1. The color of the final finish coat for the exterior and bottom flange of the fascia beams shall match the existing paint, which shall be Gray, Munsell No. 5B 7/1.

SSPC QP1 certification is required for this contract.

Bridge deck concrete sealer includes the top of decks, approach slabs, and the front faces and tops of curbs and parapets.

DESIGN STRESSES

FIELD UNITS (EXISTING CONSTRUCTION)

f'c = 3,000 psi (Superstructure – 1975 original)
fy = 40,000 psi (Reinforcement – 1975 original)
fy = 60,000 psi (Reinforcement – 2001 rehab.)

FIELD UNITS (NEW CONSTRUCTION)

f'c = 4,000 psi
fy = 60,000 psi (Reinforcement)

LOADING HS20-44

Future wearing surface, Not Allowed

DESIGN SPECIFICATIONS

2002 AASHTO Standard Specifications
for Highway Bridges, 17th Edition

GENERAL DATA
IL 159 OVER F.A.I. ROUTE 64
SEC. 82-(4,5,6,7)-1RS-2
ST. CLAIR COUNTY
STATION 684+74.22
S.N. 082-0176

WILLETT HOFMANN & ASSOCIATES INC
ENGINEERING ARCHITECTURE LAND SURVEYING
809 EAST 2ND STREET, DIXON, IL 61021-0367
T: 815-284-3381 DESIGN FIRM: #184-000918

USER NAME =	DESIGNED - EEL	REVISED -
	CHECKED - DCB	REVISED -
PLOT SCALE =	DRAWN - FDL	REVISED -
PLOT DATE =	CHECKED - EEL	REVISED -

STATE OF ILLINOIS
DEPARTMENT OF TRANSPORTATION

STRUCTURAL SHEET 2 OF 12 SHEETS

F.A.I. RTE.	SECTION	COUNTY	TOTAL SHEETS	SHEET NO.
64	82-(4,5,6,7)-1RS-2	ST. CLAIR	388	358
	WHA# 1155D20	CONTRACT NO. 76R99		
	ILLINOIS	FED. AID PROJECT		

MODEL: GPE
FILE NAME: S:\PROJECTS\2020\1155D20_IDOT\DB\DESIGN\CAD_SHEETS\WO 11\08201760820176-D876R99-002-GenData.dgn
11/13/2024 1:37:49 PM

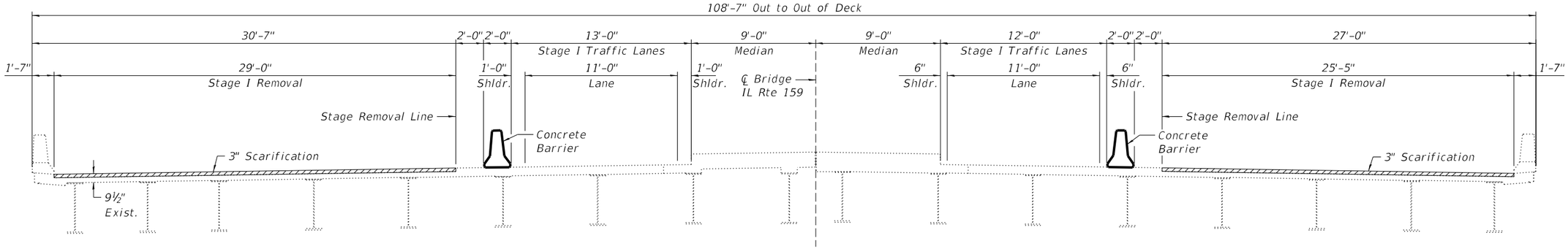

STAGE I REMOVAL

(Looking North)
(Showing Deck, Approach Spans Similar)
(Staging & Traffic Control per Sheets 122 thru 131 of Contract Plans)

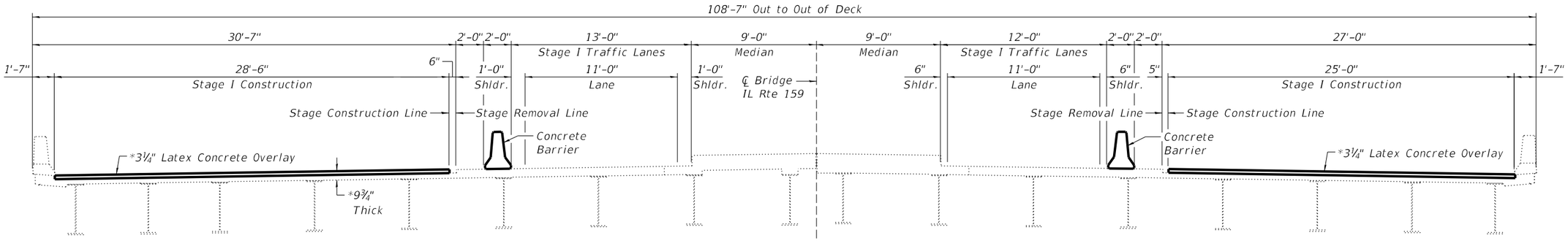

STAGE I CONSTRUCTION

(Looking North)
(Showing Deck, Approach Spans Similar)
(Staging & Traffic Control per Sheets 122 thru 131 of Contract Plans)

*Prior to Grinding

WILLETT HOFMANN & ASSOCIATES INC
ENGINEERING ARCHITECTURE LAND SURVEYING
809 EAST 2ND STREET, DIXON, IL 61021-0367
T: 815-284-3381 DESIGN FIRM: #184-000918

USER NAME =	DESIGNED -	REVISED -
	CHECKED -	REVISED -
PLOT SCALE =	DRAWN -	REVISED -
PLOT DATE =	CHECKED -	REVISED -

STATE OF ILLINOIS
DEPARTMENT OF TRANSPORTATION

STAGING DETAILS
STRUCTURE NO. 082-0176
STRUCTURAL SHEET 3 OF 12 SHEETS

F.A.I. RTE.	SECTION	COUNTY	TOTAL SHEETS	SHEET NO.
64	82-(4,5,6,7)-1RS-2	ST. CLAIR	388	359
	WHA# 1155D20	CONTRACT NO. 76R99		
	ILLINOIS	FED. AID PROJECT		

MODEL: Staging Details
FILE NAME: S:\PROJECTS\2020\1155D20_IDOT\D8\DESIGN\CAD_SHEETS\WO 11\08201760820176-D876R99-003-004-StgDtls.dgn

11/13/2024 1:37:50 PM

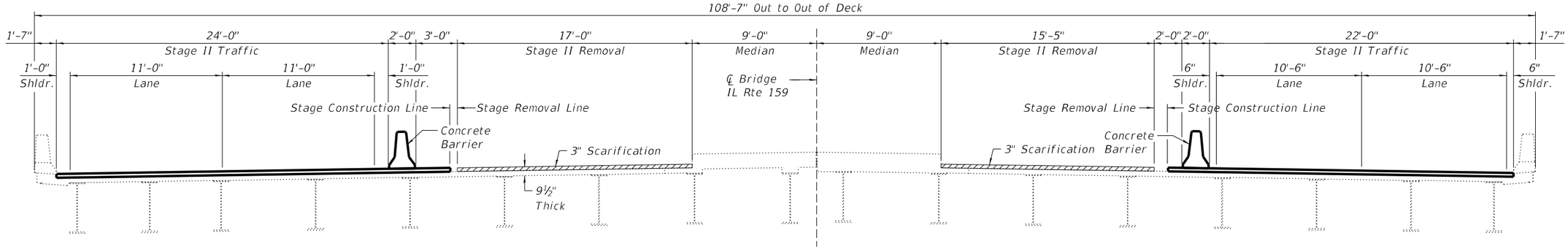

STAGE II REMOVAL

(Looking North)
(Showing Deck, Approach Spans Similar)
(Staging & Traffic Control per Sheets 122 thru 131 of Contract Plans)

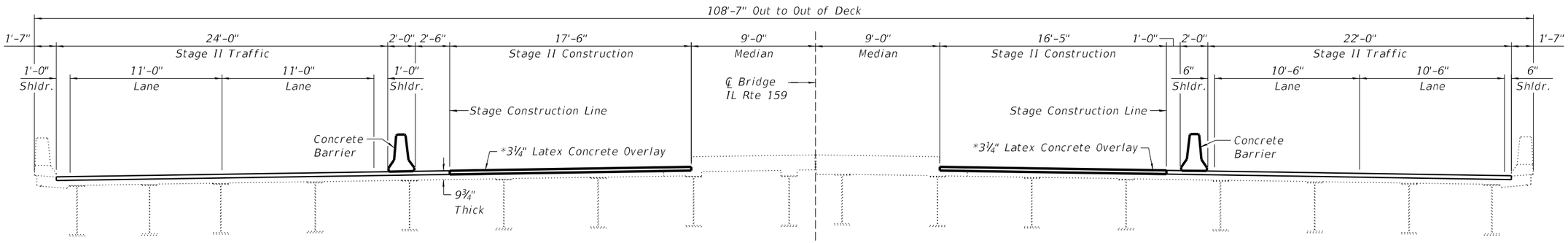

STAGE II CONSTRUCTION

(Looking North)
(Showing Deck, Approach Spans Similar)
(Staging & Traffic Control per Sheets 122 thru 131 of Contract Plans)

**Prior to Grinding*

MODEL: Staging Details
FILE NAME: S:\PROJECTS\2020\1155D20_IDOT\D8\DESIGN\CAD_SHEETS\WO 11108201760820176-D876R99-003-004-StgDtls.dgn

WILLETT HOFMANN & ASSOCIATES INC
ENGINEERING ARCHITECTURE LAND SURVEYING
809 EAST 2ND STREET, DIXON, IL 61021-0367
T: 815-284-3381 DESIGN FIRM: #184-000918

USER NAME =	DESIGNED -	REVISED -
	CHECKED -	REVISED -
PLOT SCALE =	DRAWN -	REVISED -
PLOT DATE =	CHECKED -	REVISED -

STATE OF ILLINOIS
DEPARTMENT OF TRANSPORTATION

STAGING DETAILS
STRUCTURE NO. 082-0176
STRUCTURAL SHEET 4 OF 12 SHEETS

F.A.I. RTE.	SECTION	COUNTY	TOTAL SHEETS	SHEET NO.
64	82-(4,5,6,7)-1RS-2	ST. CLAIR	388	360
	WHA# 1155D20	CONTRACT NO. 76R99		
	ILLINOIS	FED. AID PROJECT		

11/13/2024 1:37:50 PM

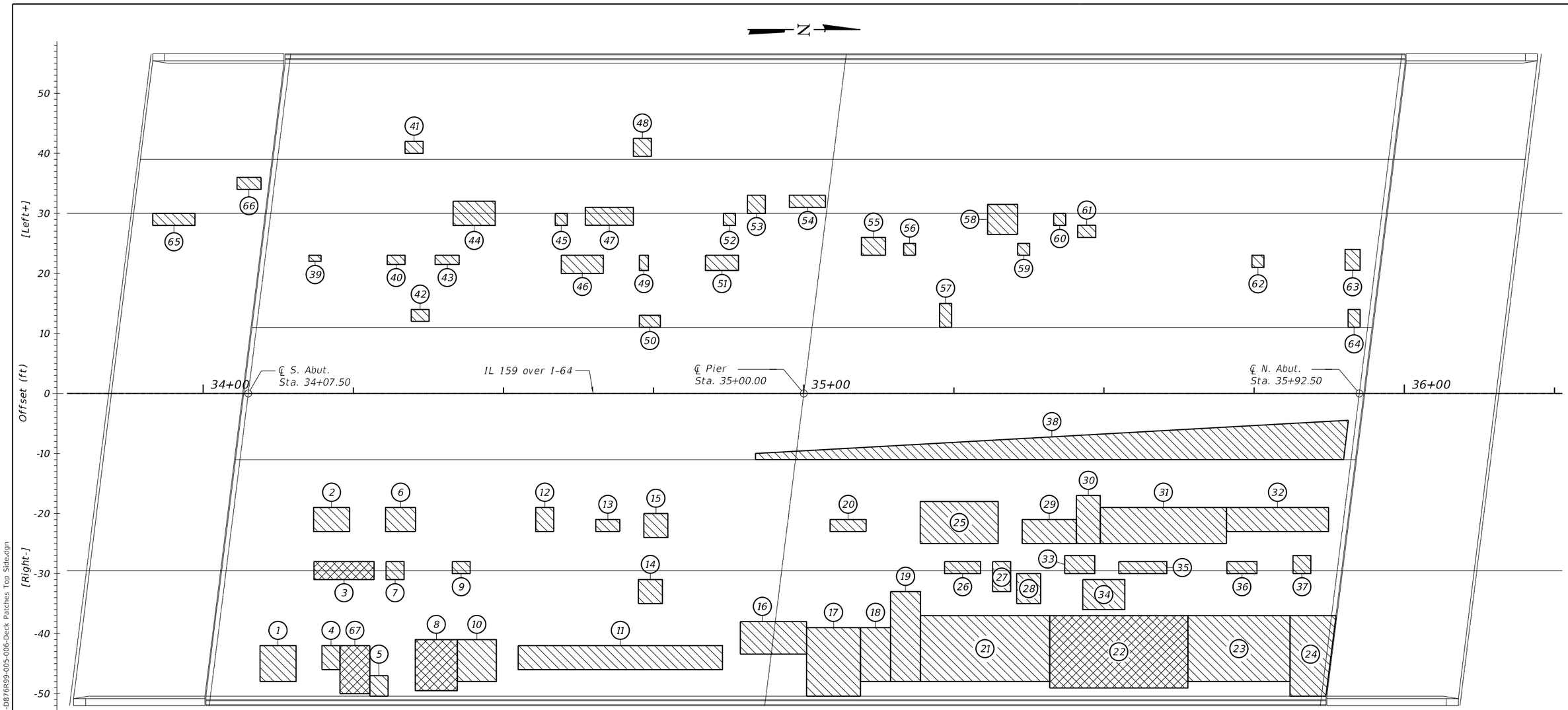

PLAN VIEW

SCALE

0' 5' 10' 15'

LEGEND

Deck Slab Repair (Partial – For Information only) 255 Sq. Yd.

Deck Slab Repair (Full Depth, Type I) 29 Sq. Yd.

Deck Slab Repair (Full Depth, Type II) 52 Sq. Yd.

BILL OF MATERIAL

ITEM	UNIT	TOTAL
Bridge Deck Latex Concrete Overlay 3¼"	Sq. Yd.	2,042
Bridge Deck Scarification 3"	Sq. Yd.	2,042
Deck Slab Repair (Full Depth, Type I)	Sq. Yd.	29
Deck Slab Repair (Full Depth, Type II)	Sq. Yd.	52
Diamond Grinding (Bridge Section)	Sq. Yd.	1,990
Bridge Deck Grooving (Longitudinal)	Sq. Yd.	1,825
Bridge Deck Concrete Sealer	Sq. Ft.	19,479

NOTES:

See Structural Sheet 6 of 10 for joint and overlay details.

Partial depth patches are paid for with the overlay and are shown for information only.

The areas of deck repairs are estimated. The deck survey and schedule shows 45 cu. yds. of full depth deck slab repairs. Plan quantities have been increased by 15% (to 52 sq. yds.)

The Engineer shall show actual patch locations on as-built plans.

Deck Survey 10-10-23.

Deck slab repair (Full Depth, Type I) are contingency pay items and assumed to be 12% of the partial repair areas. If required, the limits shall be determined by the Engineer in field.

MODEL: Deck Patches Top Side
FILE NAME: S:\PROJECTS\2020\1155D20_IDOT\DESIGN\CAD_SHEETS\WO 11\08201760820176-D876R99-005-006-Deck Patches Top Side.dgn
11/13/2024 1:37:51 PM

WILLETT HOFMANN & ASSOCIATES, INC
ENGINEERING ARCHITECTURE LAND SURVEYING
809 EAST 2ND STREET, DIXON, IL 61021-0367
T: 815-284-3381 DESIGN FIRM: #184-000918

USER NAME =	DESIGNED - EEL	REVISED -	
	CHECKED - DCB	REVISED -	
PLOT SCALE =	DRAWN - RDA	REVISED -	
PLOT DATE =	CHECKED - DCB	REVISED -	

STATE OF ILLINOIS
DEPARTMENT OF TRANSPORTATION

DECK PATCHES - TOP SIDE
STRUCTURE NO. 082-0176
STRUCTURAL SHEET 5 OF 12 SHEETS

F.A.I. RTE.	SECTION	COUNTY	TOTAL SHEETS	SHEET NO.
64	82-(4,5,6,7)-1RS-2	ST. CLAIR	388	361
	WHA# 1155D20	CONTRACT NO. 76R99		
	ILLINOIS FED. AID PROJECT			

DECK PATCHES

Patch #	Start Sta	End Sta	Offsets (ft) From	Offsets (ft) To	Length (ft.)	Width (ft.)	Area (sy)	Full or Partial Depth
1	34+09	34+15	42 Rt	48 Rt	6	6	4.00	P
2	34+18	34+24	19 Rt	23 Rt	6	4	2.67	P
3	34+18	34+28	28 Rt	31 Rt	10	3	3.33	F
4	34+20	34+23	42 Rt	46 Rt	3	4	1.33	P
5	34+28	34+31	47 Rt	50.4 Rt	3	3.42	1.14	P
6	34+30	34+35	19 Rt	23 Rt	5	4	2.22	P
7	34+30	34+33	28 Rt	31 Rt	3	3	1.00	P
8	34+35	34+42	41 Rt	49.5 Rt	7	8.5	6.61	F
9	34+41	34+44	28 Rt	30 Rt	3	2	0.67	P
10	34+41	34+48	41 Rt	48 Rt	6.5	7	5.06	P
11	34+52	34+86	42 Rt	46 Rt	34	4	15.11	P
12	34+55	34+58	19 Rt	23 Rt	3	4	1.33	P
13	34+65	34+69	21 Rt	23 Rt	4	2	0.89	P
14	34+72	34+76	31 Rt	35 Rt	4	4	1.78	P
15	34+73	34+77	20 Rt	24 Rt	4	4	1.78	P
16	34+89	35+00	38 Rt	43.4 Rt	11	5.42	6.62	P
17	35+00	35+09	39 Rt	50.4 Rt	9	11.42	11.42	P
18	35+09	35+14	39 Rt	48 Rt	5	9	5.00	P
19	35+14	35+19	33 Rt	48 Rt	5	15	8.33	P
20	35+04	35+10	21 Rt	23 Rt	6	2	1.33	P
21	35+19	35+41	37 Rt	48 Rt	21.5	11	26.28	P
22	35+41	35+64	37 Rt	49 Rt	23	12	30.67	F
23	35+64	35+81	37 Rt	48 Rt	17	11	20.78	P
24	35+81	35+89	37 Rt	50.4 Rt	7.68	13.42	11.45	P
25	35+19	35+32	18 Rt	25 Rt	13	7	10.11	P
26	35+23	35+29	28 Rt	30 Rt	6	2	1.33	P
27	35+31	35+34	28 Rt	33 Rt	3	5	1.67	P
28	35+35	35+39	30 Rt	35 Rt	4	5	2.22	P
29	35+36	35+45	21 Rt	25 Rt	9	4	4.00	P
30	35+45	35+49	17 Rt	25 Rt	4	8	3.56	P
31	35+49	35+70	19 Rt	25 Rt	21	6	14.00	P
32	35+70	35+87	19 Rt	23 Rt	17	4	7.56	P
33	35+43	35+48	27 Rt	30 Rt	5	3	1.67	P
34	35+46	35+53	31 Rt	36 Rt	7	5	3.89	P

DECK PATCHES - CONT.

Patch #	Start Sta	End Sta	Offsets (ft) From	Offsets (ft) To	Length (ft.)	Width (ft.)	Area (sy)	Full or Partial Depth
35	35+52	35+60	28 Rt	30 Rt	8	2	1.78	P
36	35+70	35+75	28 Rt	30 Rt	5	2	1.11	P
37	35+81	35+84	27 Rt	30 Rt	3	3	1.00	P
38	34+92	35+91	7.24 Rt	11 Rt	99	3.76	41.36	P
39	34+18	34+20	22 Lt	23 Lt	2	1	0.22	P
40	34+31	34+34	21.5 Lt	23 Lt	3	1.5	0.50	P
41	34+34	34+37	40 Lt	42 Lt	3	2	0.67	P
42	34+35	34+38	12 Lt	14 Lt	3	2	0.67	P
43	34+39	34+43	21.5 Lt	23 Lt	4	1.5	0.67	P
44	34+42	34+49	28 Lt	32 Lt	7	4	3.11	P
45	34+59	34+61	28 Lt	30 Lt	2	2	0.44	P
46	34+60	34+67	20 Lt	23 Lt	7	3	2.33	P
47	34+64	34+72	28 Lt	31 Lt	8	3	2.67	P
48	34+72	34+75	39.5 Lt	42.5 Lt	3	3	1.00	P
49	34+73	34+74	20.5 Lt	23 Lt	1.5	2.5	0.42	P
50	34+73	34+76	11 Lt	13 Lt	3.5	2	0.78	P
51	34+84	34+89	20.5 Lt	23 Lt	5.5	2.5	1.53	P
52	34+87	34+89	28 Lt	30 Lt	2	2	0.44	P
53	34+91	34+94	30 Lt	33 Lt	3	3	1.00	P
54	34+98	35+04	31 Lt	33 Lt	6	2	1.33	P
55	35+10	35+14	23 Lt	26 Lt	4	3	1.33	P
56	35+17	35+19	23 Lt	25 Lt	2	2	0.44	P
57	35+23	35+25	11 Lt	15 Lt	2	4	0.89	P
58	35+31	35+36	26.5 Lt	31.5 Lt	5	5	2.78	P
59	35+36	35+38	23 Lt	25 Lt	2	2	0.44	P
60	35+42	35+44	28 Lt	30 Lt	2	2	0.44	P
61	35+46	35+49	26 Lt	28 Lt	3	2	0.67	P
62	35+75	35+77	21 Lt	23 Lt	2	2	0.44	P
63	35+90	35+93	20.5 Lt	24 Lt	2.5	3.5	0.97	P
64	35+91	35+93	11 Lt	14 Lt	2	3	0.67	P
65	33+92	33+99	28 Lt	30 Lt	7	2	1.56	P
66	34+06	34+10	34 Lt	36 Lt	4	2	0.89	P
67	34+23	34+28	42 Rt	50 Rt	5	8	4.44	F

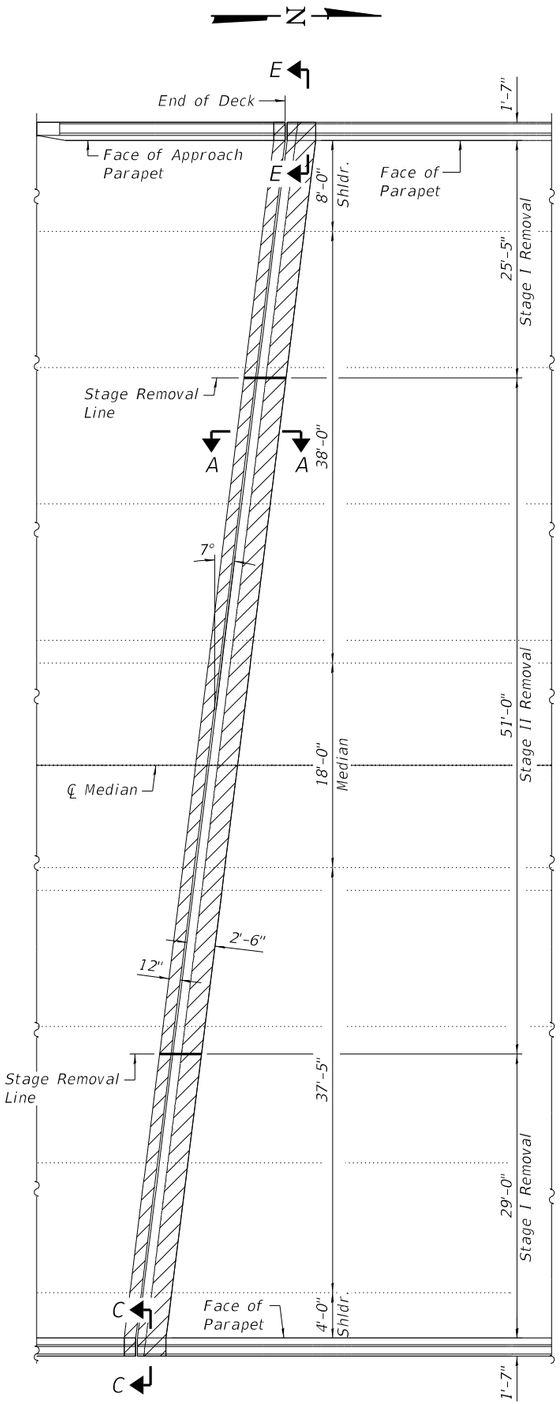

REMOVAL PLAN

(S. Abutment Shown, N. Abutment Similar)

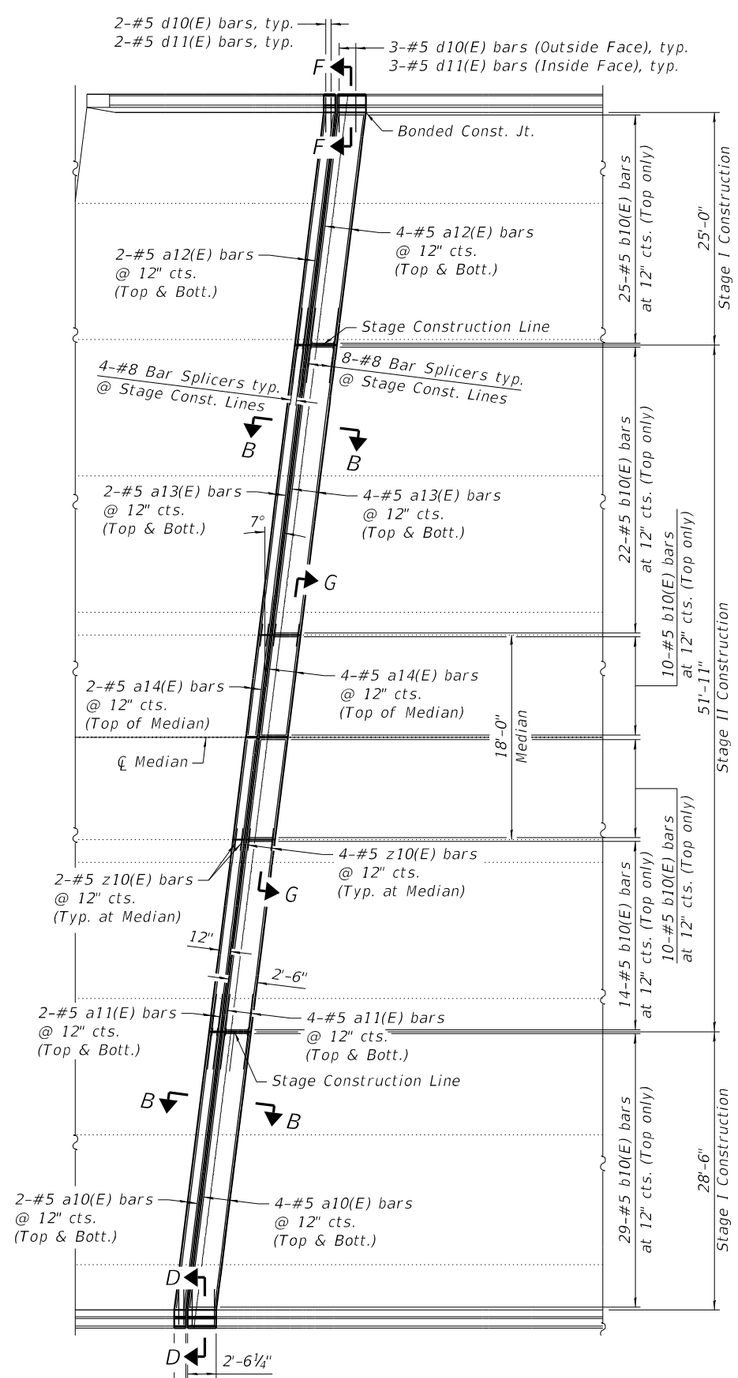

REPLACEMENT PLAN

(S. Abutment Shown, N. Abutment Similar)

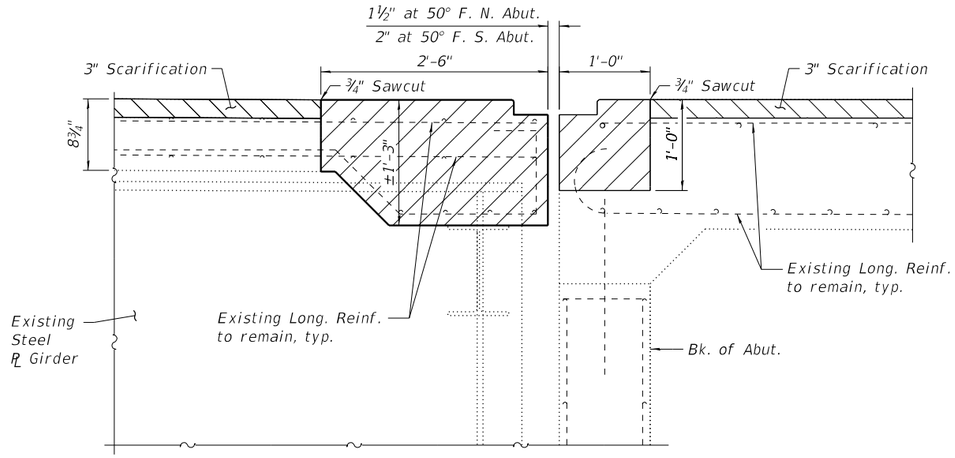

SECTION A-A

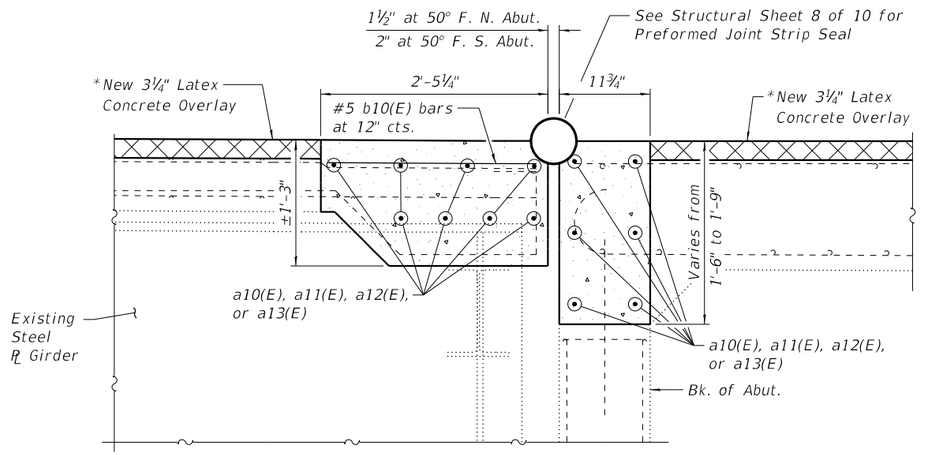

SECTION B-B

*Prior to ¼" Diamond Grinding

LEGEND:

Concrete Removal

Latex Concrete Overlay

NOTES:

Existing reinforcement bars extending into the removal area shall be cleaned, straightened and incorporated into the new construction. Any reinforcement bars that are damaged during Concrete Removal shall be replaced with approved bar splicer or anchorage system. Cost included with Concrete Removal.

All existing reinforcement in parapets and wingwalls to remain in place.

See Structural Sheet 7 of 10 for Section thru Bridge Parapet, Section thru Approach Parapet, Bill of Material and Reinforcement Bending Diagrams.

For Overlay and Deck Patching details, see Cross Section on Structural Sheet 4 of 10.

See Structural Sheet 8 of 10 for Section G-G.

See Sheet 53 of 53 for Bar Splicers.

WILLETT HOFMANN & ASSOCIATES INC
ENGINEERING ARCHITECTURE LAND SURVEYING
809 EAST 2ND STREET, DIXON, IL 61021-0367
T: 815-284-3381 DESIGN FIRM: #184-000918

USER NAME =	DESIGNED - EEL	REVISED -	
	CHECKED - DCB	REVISED -	
PLOT SCALE =	DRAWN - FDL	REVISED -	
PLOT DATE =	CHECKED - DCB	REVISED -	

STATE OF ILLINOIS
DEPARTMENT OF TRANSPORTATION

ABUTMENT JOINT REPLACEMENT DETAILS
STRUCTURE NO. 082-0176

STRUCTURAL SHEET 7 OF 12 SHEETS

F.A.I. RTE.	SECTION	COUNTY	TOTAL SHEETS	SHEET NO.
64	82-(4,5,6,7)-1RS-2	ST. CLAIR	388	363
	WHA# 1155D20	CONTRACT NO. 76R99		
	ILLINOIS	FED. AID PROJECT		

MODEL: Abutment Joint Replacement Details
FILE NAME: S:\PROJECTS\2020\1155D20_IDOT\DB\DESIGN\CAD_SHEETS\WO 11108201760820176-D8766990-007-Abutment Joint Replacement Details.dgn

11/13/2024 1:37:52 PM

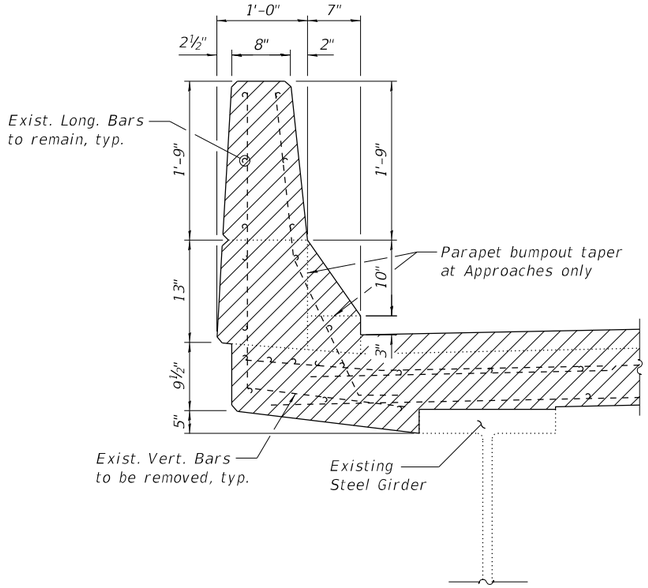

SECTION C-C

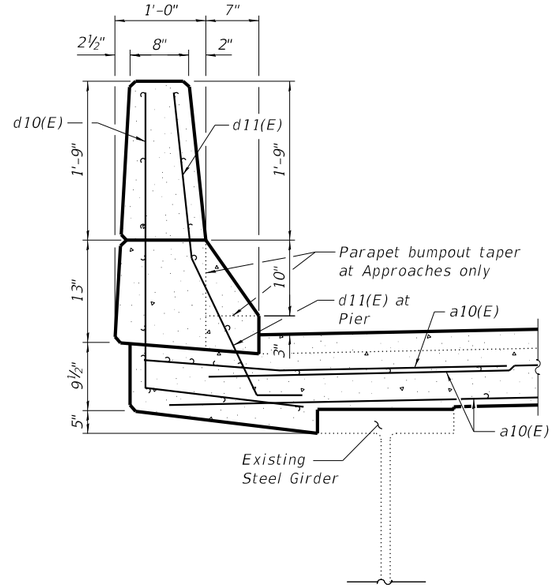

SECTION D-D

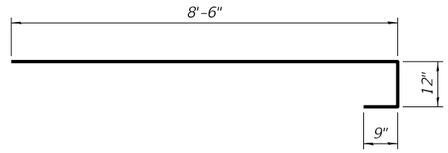

a14(E) BAR

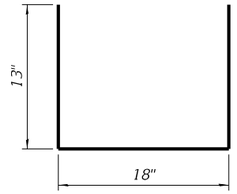

c10(E) BAR

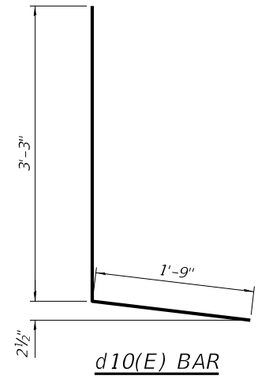

d10(E) BAR

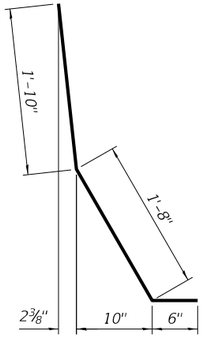

d11(E) BAR

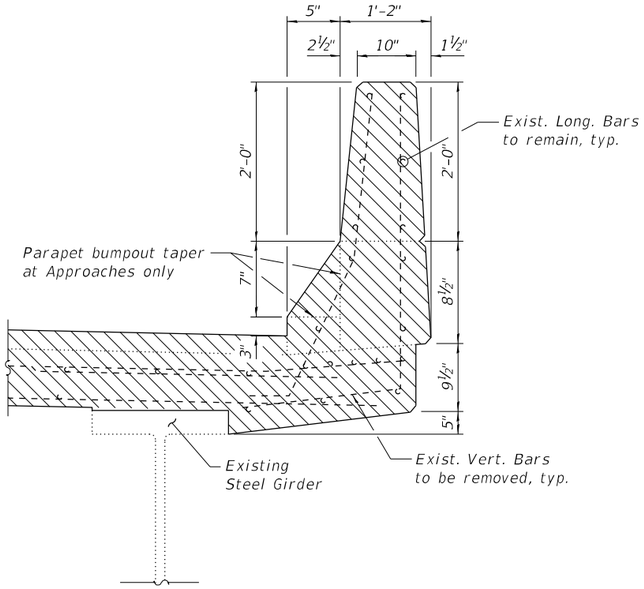

SECTION E-E

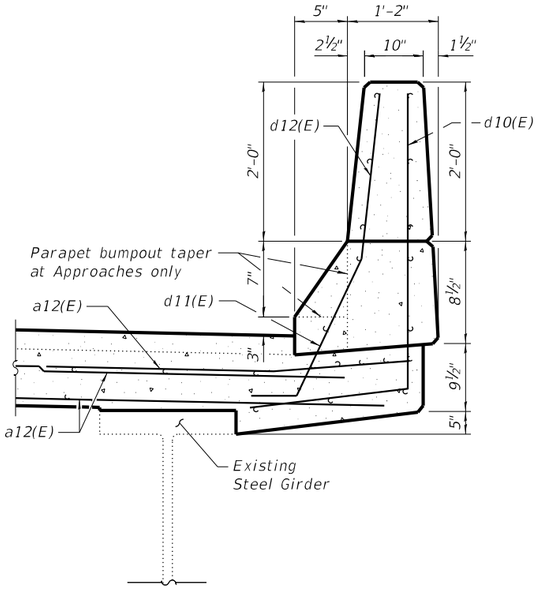

SECTION F-F

LEGEND:

Concrete Removal

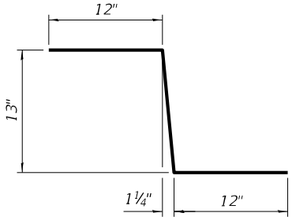

z10(E) BAR

BILL OF MATERIAL

Bar	No.	Size	Length	Shape
a10(E)	12	#5	28'-3"	
a11(E)	12	#5	21'-7"	
a12(E)	12	#5	24'-8"	
a13(E)	12	#5	29'-6"	
a14(E)	24	#5	10'-3"	
b10(E)	220	#5	2'-2"	
c10(E)	12	#5	3'-8"	
d10(E)	10	#5	5-0"	
d11(E)	10	#5	4'-0"	
z10(E)	12	#5	3'-1"	
Concrete Removal			Cu. Yds.	47.2
Concrete Superstructure			Cu. Yds.	47.2
Reinforcement Bars, Epoxy Coated			Pound	2,240
Bar Splicers			Each	48

WILLETT HOFMANN & ASSOCIATES INC
ENGINEERING ARCHITECTURE LAND SURVEYING
809 EAST 2ND STREET, DIXON, IL 61021-0367
T: 815-284-3381 DESIGN FIRM: #184-000918

USER NAME =	DESIGNED - EEL	REVISED -	
	CHECKED - DCB	REVISED -	
PLOT SCALE =	DRAWN - FDL	REVISED -	
PLOT DATE =	CHECKED - DCB	REVISED -	

STATE OF ILLINOIS
DEPARTMENT OF TRANSPORTATION

JOINT REPLACEMENT AND REPAIR DETAILS
STRUCTURE NO. 082-0176
STRUCTURAL SHEET 8 OF 12 SHEETS

F.A.I. RTE.	SECTION	COUNTY	TOTAL SHEETS	SHEET NO.
64	82-(4,5,6,7)-1RS-2	ST. CLAIR	388	364
	WHA# 1155D20	CONTRACT NO. 76R99		
	ILLINOIS FED. AID PROJECT			

MODEL: Joint Replacement and Repair Details
FILE NAME: S:\PROJECTS\2020\1155D20_IDOT\D8\DESIGN\CAD_SHEETS\WO 11082017\6082017\6082017\6082017-D876R99-008-JtReplacementandRepairDtls.dgn
11/13/2024 1:37:52 PM

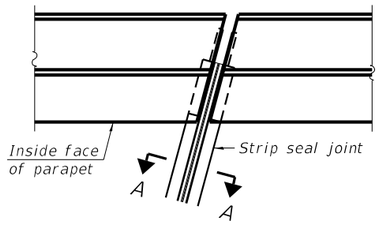

PLAN AT PARAPET

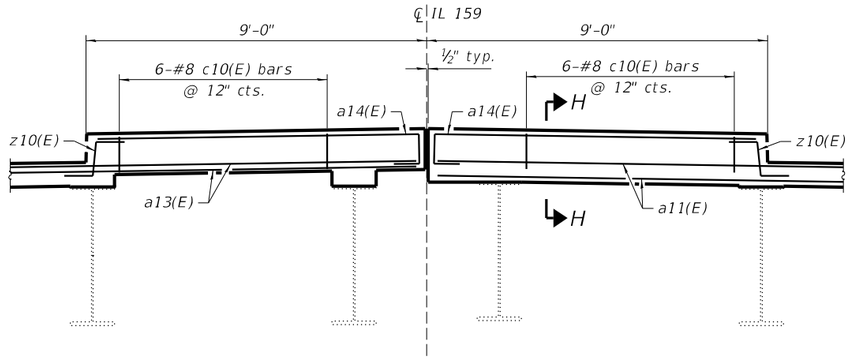

SECTION G-G

See Structural Sheet 7 of 10 for reinforcement bar details and bill of material.

NOTES:

The strip seal shall be made continuous and shall have a minimum thickness of ¼". The configuration of the strip seal shall match the configuration of the locking edge rails. Open or "webbed" strip seal gland configurations are not permitted. The gland shall be sized for a maximum rated movement of 4".

The locking edge rails depicted are configured for typical applications and are conceptual only. The actual configuration of the locking edge rails and matching strip seal may vary from manufacturer to manufacturer provided they fit the application and meet the minimum anchorage shown. Flanged edge rails, however, will not be allowed. Locking edge rails may exceed the 4½" maximum depth provided the anchorage system is revised according to the manufacturer's recommendation.

The manufacturer's recommended installation methods shall be followed.

All steel components shall be galvanized after fabrication according to Article 520.03 of the Standard Specifications.

The Maximum space between locking edge rail segments shall be 3/16" and sealed with a suitable sealant; however, any rail joint within 10' measured perpendicular to the face of the curb or parapet shall be welded as shown in the locking edge rail splice detail.

Cost of parapet sliding plates, embedded plates, and anchorage studs included with Preformed Joint Strip Seal.

39" constant slope barrier shown, 44" constant slope barrier similar as noted.

The concrete opening below the strip seal will vary based on the locking edge rail chosen by the Contractor. Deck and parapet lengths shown elsewhere in the plans are dimensioned to the concrete opening, not the joint opening, and are based on the rolled locking edge rail. If the Contractor elects to use a different locking edge rail, dimensional adjustments may be required. One exception to this would be the strip seal joint at the end of the precast bridge approach slab. For these cases the pavement connector length shall be adjusted, not the length of the bridge approach slab.

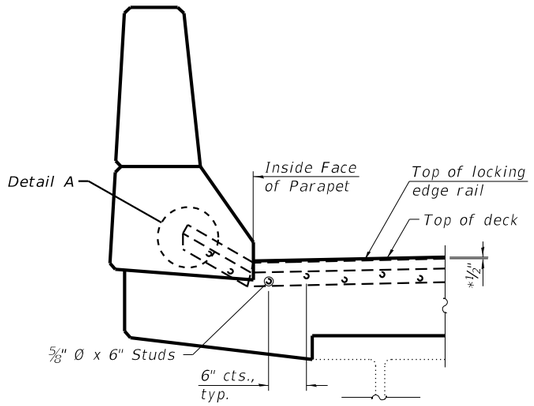

SECTION AT PARAPET

Skews ≤ 30°

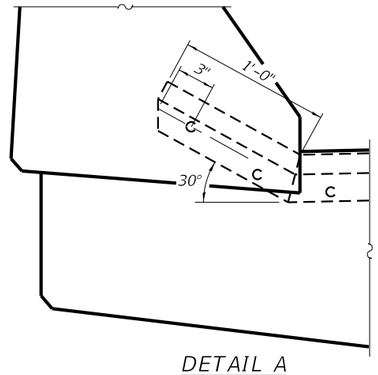

DETAIL A

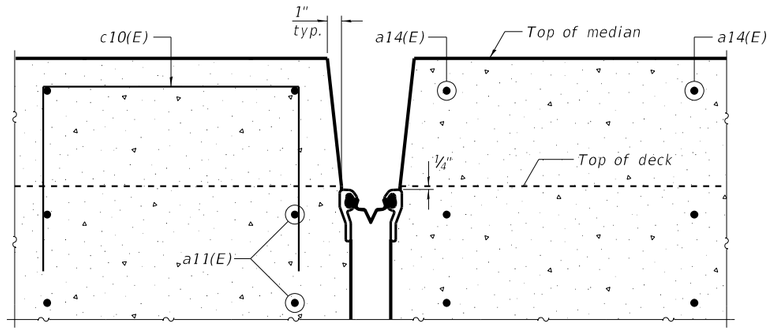

SECTION H-H

(at Rt. ℄s)

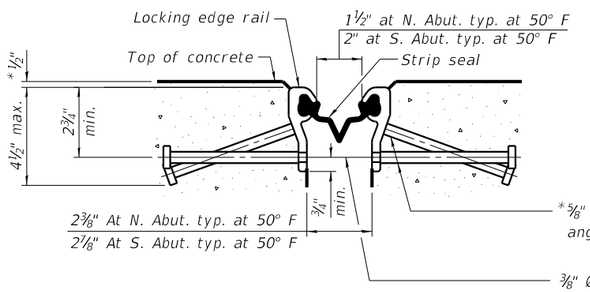

SHOWING ROLLED RAIL JOINT

*Prior to ¼" Diamond Grinding

SECTION A-A

*Granular or solid flux filled headed studs conforming to Article 1006.32 of the Std. Specs., automatically end welded.

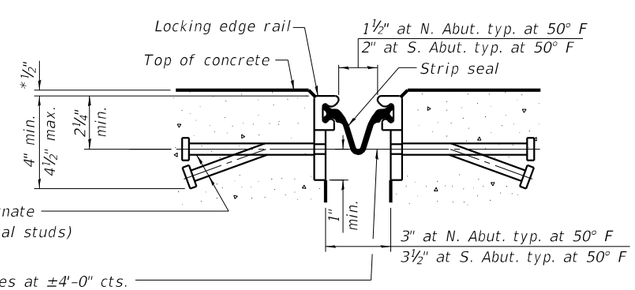

SHOWING WELDED RAIL JOINT

*Prior to ¼" Diamond Grinding

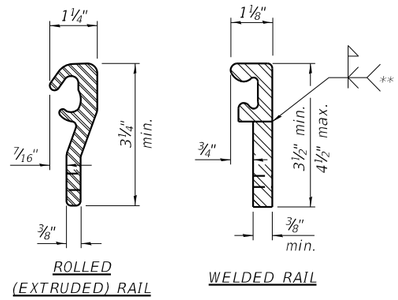

ROLLED (EXTRUDED) RAIL

WELDED RAIL

LOCKING EDGE RAILS

**Back gouge not required if complete joint penetration is verified by mock-up.

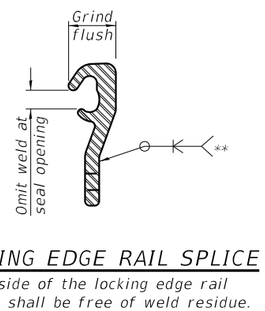

LOCKING EDGE RAIL SPLICE

The inside of the locking edge rail groove shall be free of weld residue. Rolled rail shown, welded rail similar.

BILL OF MATERIAL

Item	Unit	Total
Preformed Joint Strip Seal	Foot	219

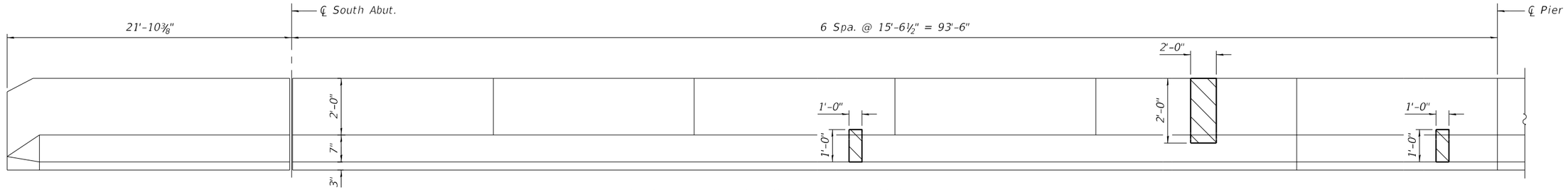

INSIDE ELEVATION OF WEST PARAPET

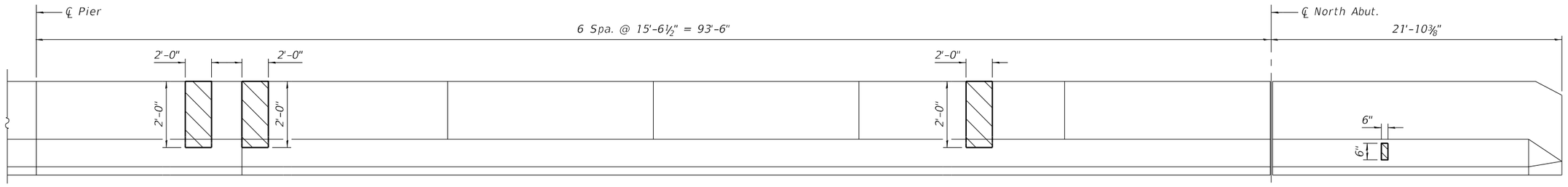

INSIDE ELEVATION OF WEST PARAPET

LEGEND

Structural Repair of Concrete
(Depth equal to or less than 5")

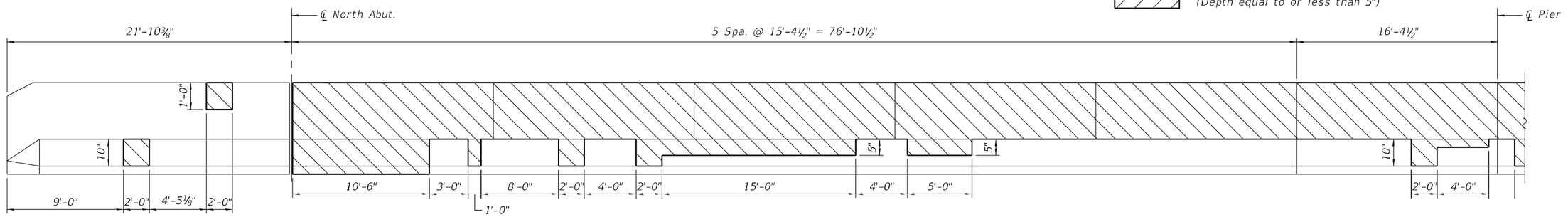

INSIDE ELEVATION OF EAST PARAPET

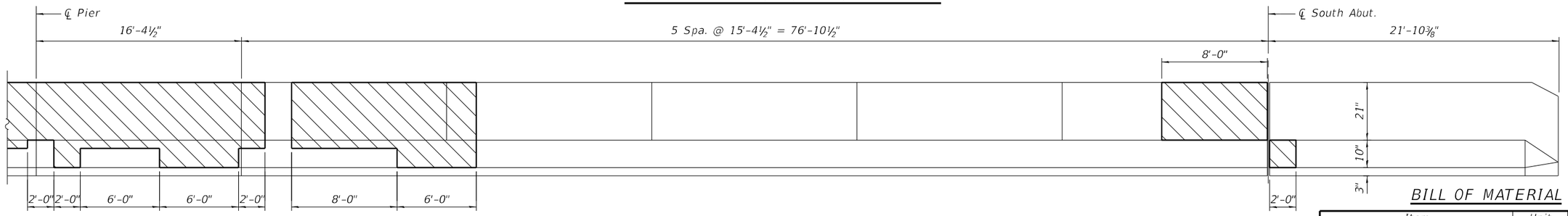

INSIDE ELEVATION OF EAST PARAPET

NOTE:
Apply acrylic coat to front face and top face of both parapets.

*A 10% Contingency Item of "Structural Repair of Concrete (Depth equal to or less than 5")" has been included on the Bill of Material to cover advancing deterioration.

BILL OF MATERIAL

Item	Unit	Total
Structural Repair of Concrete (Depth equal to or less than 5")	Sq. Ft.	310
Acrylic Coating	Sq. Yd.	35

MODEL: Parapet Repairs
FILE NAME: S:\PROJECTS\2020\1155D20_IDOT\DB\DESIGN\CAD_SHEETS\WO 11\08201761082017610820176-DB76R99-010-Parapet Repairs.dgn

11/13/2024 1:37:54 PM

WILLETT HOFMANN & ASSOCIATES INC
ENGINEERING ARCHITECTURE LAND SURVEYING
809 EAST 2ND STREET, DIXON, IL 61021-0367
T: 815-284-3381 DESIGN FIRM: #184-000918

USER NAME =	DESIGNED - EEL	REVISED -	
	CHECKED - DCB	REVISED -	
PLOT SCALE =	DRAWN - RDA	REVISED -	
PLOT DATE =	CHECKED - DCB	REVISED -	

STATE OF ILLINOIS
DEPARTMENT OF TRANSPORTATION

PARAPET REPAIRS
STRUCTURE NO. 082-0176
STRUCTURAL SHEET 10 OF 12 SHEETS

F.A.I. RTE.	SECTION	COUNTY	TOTAL SHEETS	SHEET NO.
64	82-(4,5,6,7)-1RS-2	ST. CLAIR	388	366
	WHA# 1155D20	CONTRACT NO. 76R99		
	ILLINOIS FED. AID PROJECT			

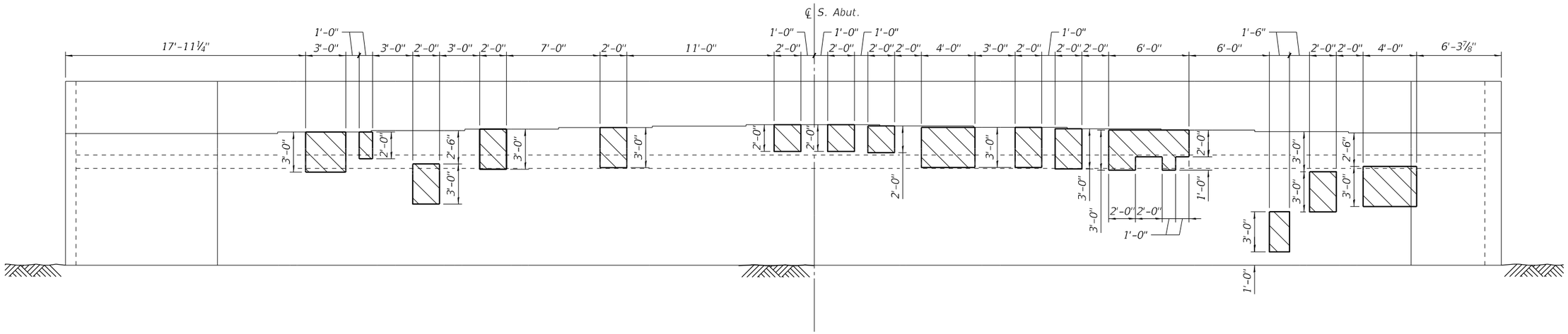

SOUTH ABUTMENT

Lower Retaining Wall not shown

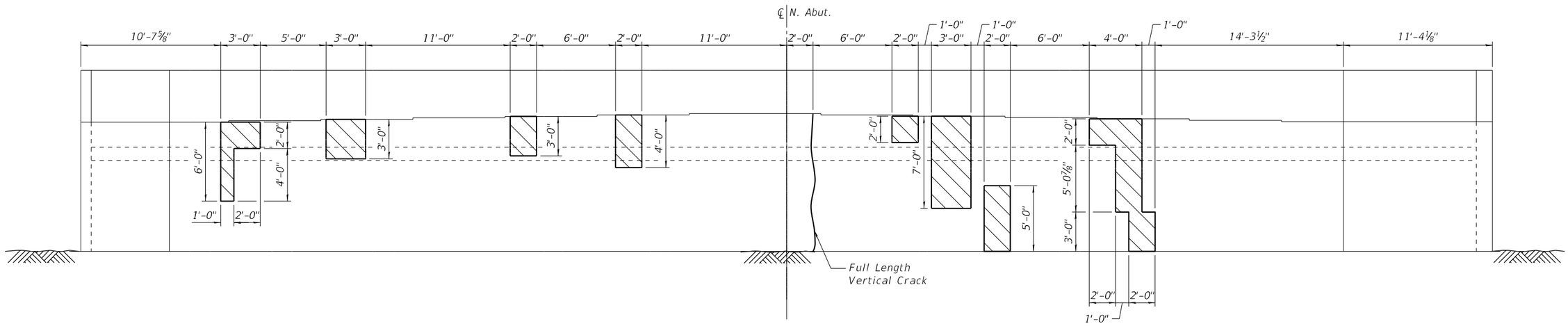

NORTH ABUTMENT

Lower Retaining Wall not shown

LEGEND

Structural Repair of Concrete
(Depth equal to or less than 5")

BILL OF MATERIAL

	Item	Unit	Total
	Structural Repair of Concrete (Depth equal to or less than 5")	Sq. Ft.	198
*	Structural Repair of Concrete (Depth Greater than 5")	Sq. Ft.	20

*Contingency Item to cover advancing deterioration.

WILLETT HOFMANN & ASSOCIATES INC
ENGINEERING ARCHITECTURE LAND SURVEYING
809 EAST 2ND STREET, DIXON, IL 61021-0367
T: 815-284-3381 DESIGN FIRM: #184-000918

USER NAME =	DESIGNED - EEL	REVISED -	
	CHECKED - DCB	REVISED -	
PLOT SCALE =	DRAWN - RDA	REVISED -	
PLOT DATE =	CHECKED - DCB	REVISED -	

STATE OF ILLINOIS
DEPARTMENT OF TRANSPORTATION

ABUTMENT REPAIRS
STRUCTURE NO. 082-0176
STRUCTURAL SHEET 11 OF 12 SHEETS

F.A.I. RTE.	SECTION	COUNTY	TOTAL SHEETS	SHEET NO.
64	82-(4,5,6,7)-1RS-2	ST. CLAIR	388	367
	WHA# 1155D20	CONTRACT NO. 76R99		
	ILLINOIS	FED. AID PROJECT		

MODEL: Abutment Repairs
FILE NAME: S:\PROJECTS\2020\1155D20_IDOT\D8\DESIGN\CAD_SHEETS\WO 11\08201760820176-D876R99-011-Abutment Repairs.dgn

11/13/2024 1:37:54 PM

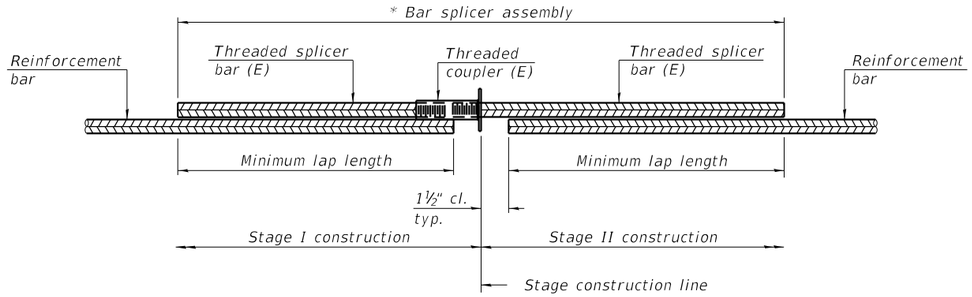

STANDARD BAR SPLICER ASSEMBLY PLAN

Only bar splicer assemblies as presented on the approved QPL list may be used.

Threaded splicer bar length = min. lap length + 1½" + thread length

** Epoxy not required on Bar Splicer Assembly components used in conjunction with black bars.*

Location	Bar size	No. assemblies required	Minimum lap length
Ex. Jt. Replace	#5	48	3'-0"

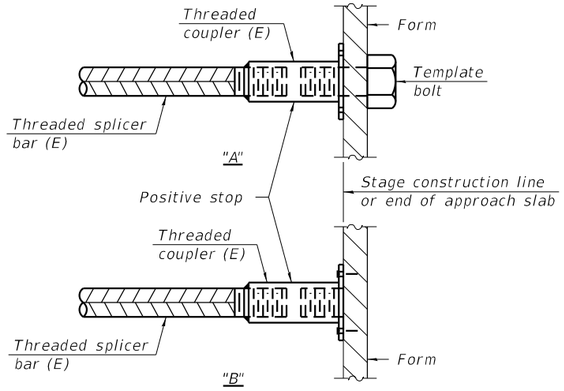

INSTALLATION AND SETTING METHODS

"A" : Set bar splicer assembly by means of a template bolt.
"B" : Set bar splicer assembly by nailing to wood forms or cementing to steel forms.
(E) : Indicates epoxy coating.

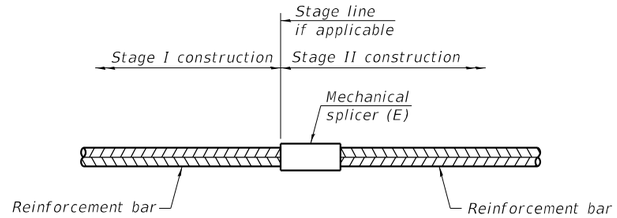

STANDARD MECHANICAL SPLICER

Location	Bar size	No. assemblies required

NOTES:

Splicer bars shall be deformed with threaded ends and have a minimum 60 ksi yield strength.

All reinforcement shall be lapped and tied to the splicer bars.

Bar splicer assemblies shall be epoxy coated according to the requirements for reinforcement bars. See Section 508 of the Standard Specifications.

See approved list of bar splicer assemblies and mechanical splicers for alternatives.

BSD-1 5-15-2023

WILLETT HOFMANN & ASSOCIATES INC
ENGINEERING ARCHITECTURE LAND SURVEYING
809 EAST 2ND STREET, DIXON, IL 61021-0367
T: 815-284-3381 DESIGN FIRM: #184-000918

USER NAME =	DESIGNED - EEL	REVISED -	
	CHECKED - DCB	REVISED -	
PLOT SCALE =	DRAWN - FDL	REVISED -	
PLOT DATE =	CHECKED - EEL	REVISED -	

STATE OF ILLINOIS
DEPARTMENT OF TRANSPORTATION

BAR SPLICER ASSEMBLY AND MECHANICAL SPLICER DETAILS
STRUCTURE NO. 082-0176
STRUCTURAL SHEET 12 OF 12 SHEETS

F.A.I. RTE.	SECTION	COUNTY	TOTAL SHEETS	SHEET NO.
64	82-(4,5,6,7)-1RS-2	ST. CLAIR	388	368
	WHA# 1155D20	CONTRACT NO. 76R99		
	ILLINOIS	FED. AID PROJECT		

MODEL: Bar Splicer Assembly and Mechanical Splicer Details
FILE NAME: S:\PROJECTS\2020\1155D20_IDOT\D8\DESIGN\CAD_SHEETS\WO 11\08201760820176-D876R99-012-Bar Splicer Assembly and Mechanical Splicer Details.dgn
11/13/2024 1:37:55 PM

EXISTING STRUCTURE: S.N. 082-0308 (E.B.) & S.N. 082-0309 (W.B.): Built as F.A.I. Route 64 Sec. 82-(4,5,6,7)-IR in 2007. The existing structure is a on three span reinforced concrete deck composite on continuous rolled girders. The structures are 152'-6" Back to Back and 67'-10" Out to Out of Parapets. Traffic maintained utilizing staged construction.

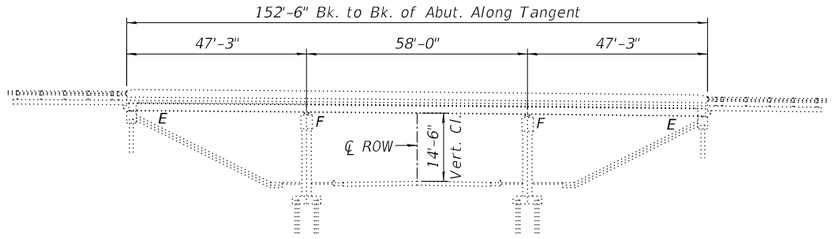

W. ABUT. PIER #1 PIER #2 E. ABUT.

ELEVATION VIEW

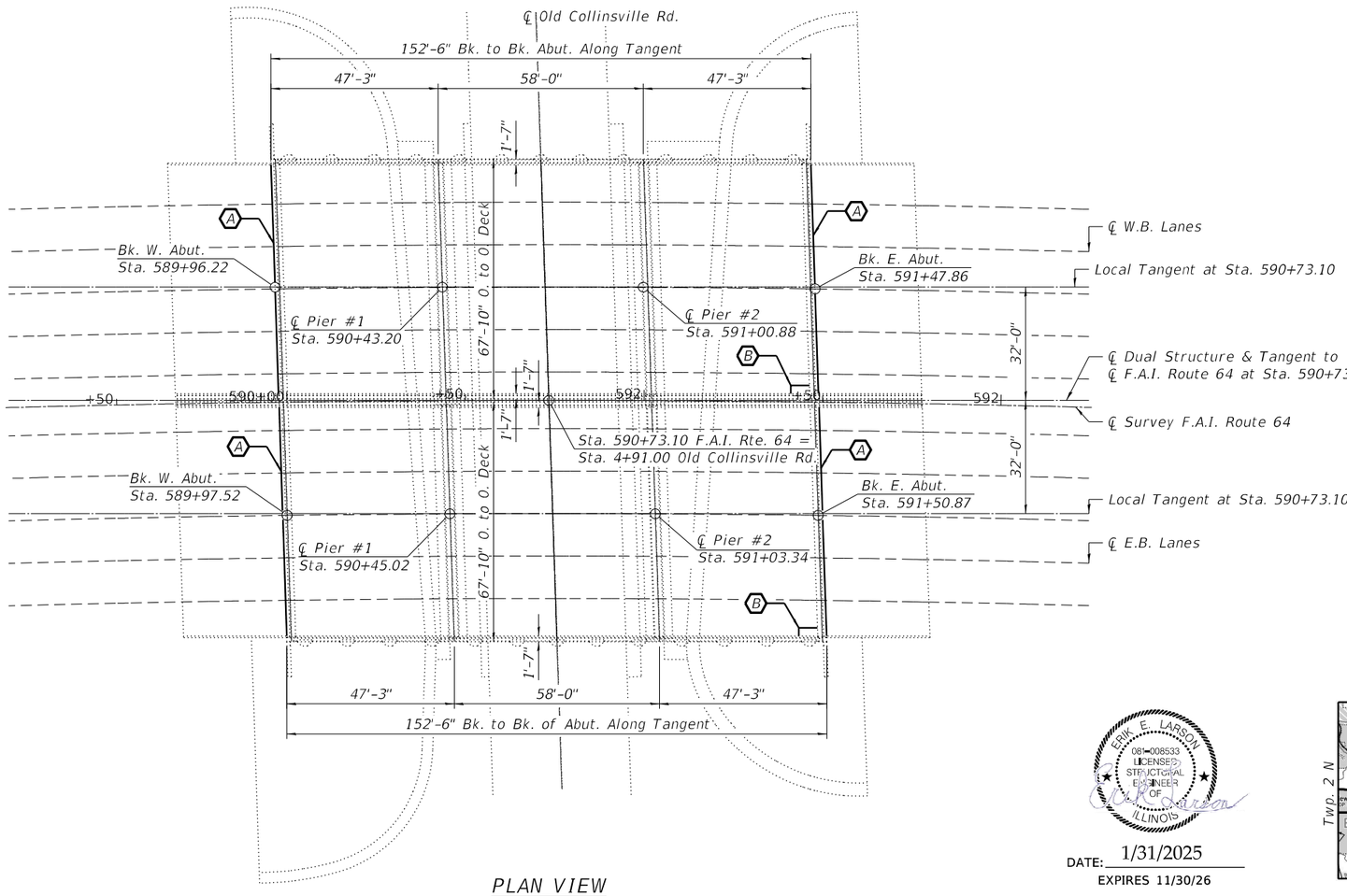

PLAN VIEW

INDEX OF SHEETS LOCATIONS 6 & 7

1 General Plan and Elevation
2 Staging Details
3 Deck Patches Top Side
4 Bridge Relief Joint Repair Details

TOTAL BILL OF MATERIAL

	ITEM	UNIT	SUPER	SUB	TOTAL
	Concrete Removal	Cu. Yd.	0.1	———	0.1
	Floor Drains	Each	2	———	2
	Concrete Superstructure	Cu. Yd.	0.1	———	0.1
*	Deck Slab Repair (Partial)	Sq. Yd.	20	———	20
*	Clean & Reseal Relief Joint	Foot	133	———	133
*	Bridge Deck Concrete Sealer	Sq. Ft.	30,688	———	30,688

* See Special Provisions

GENERAL NOTES:

These structures will retain the same number: 082-0308 (E.B.) & 082-0309 (W.B.).

Two way traffic shall be maintained during rehabilitation of existing structure.

Repair dimensions and locations shown are estimates and will be determined by the Engineer in the field.

Existing reinforcement bars extending into the removal area shall be cleaned, straightened and incorporated into the new construction. Any reinforcement bars that are damaged during the concrete removal shall be replaced with approved bar splicer or anchorage system. Cost included with Concrete Removal.

Deck slab repair (partial) is a contingency pay item. If required, the limits shall be determined by the Engineer in field.

Plan dimensions and details relative to the existing structure have been taken from existing plans are Subject to nominal construction variations. The contractor shall field verify existing dimensions and details affecting new construction and make necessary approved adjustments prior to construction or ordering of materials. Such variations shall not be cause for additional compensation for a change in scope of the work, however, the contractor will be paid for the quantity actually furnished at the unit price bid for the work.

Bridge deck concrete sealer includes the top of decks, approach slabs, and the front faces and tops of curbs and parapets.

SCOPE OF WORK:

(A) Saw cut Joint and Install Bridge Relief Joint Sealer

(B) Install Deck Drains

DESIGN STRESSES

FIELD UNITS (EXISTING CONSTRUCTION)

f'c = 3,500 psi
fy = 60,000 psi (Reinforcement)
fy = 50,000 psi (Structural Steel Grade 50)

FIELD UNITS (NEW CONSTRUCTION)

f'c = 4,000 psi

LOADING HS20 & ALT.

Allow 50#/sq. ft. for future wearing surface.

DESIGN SPECIFICATIONS

2002 AASHTO, Standard Specifications For Highway Bridges. 17th Edition

ERIK E. LARSON
081-008533
LICENSED
STRUCTURAL
ENGINEER
OF
ILLINOIS

DATE: 1/31/2025

EXPIRES 11/30/26

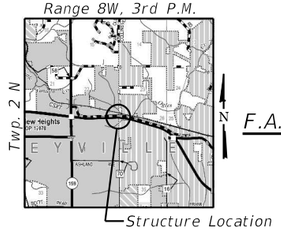

LOCATION SKETCH

GENERAL PLAN AND ELEVATION
F.A.I. ROUTE 64 OVER OLD COLLINSVILLE RD
SEC. 82-(4,5,6,7)-1RS-2
ST. CLAIR COUNTY
STATION 590+73.10
S.N. 082-0308 & S.N. 082-0309

MODEL: GPE
FILE NAME: S:\PROJECTS\2020\1155D20_IDOT\D\DESIGN\CAD_SHEETS\WO 11\08203\08203\08203\0309\08203\0309+0876R99+0014-GPE.dgn

WILLETT HOFMANN & ASSOCIATES INC
ENGINEERING ARCHITECTURE LAND SURVEYING
809 EAST 2ND STREET, DIXON, IL 61021-0367
T: 815-284-3381 DESIGN FIRM: #184-000918

USER NAME =	DESIGNED - EEL	REVISED - ⚠1 1-7-25 EEL	
	CHECKED - DCB	REVISED -	
PLOT SCALE =	DRAWN - FDL	REVISED -	
PLOT DATE =	CHECKED - DCB	REVISED -	

STATE OF ILLINOIS
DEPARTMENT OF TRANSPORTATION

STRUCTURAL SHEET 1 OF 4 SHEETS

F.A.I. RTE.	SECTION	COUNTY	TOTAL SHEETS	SHEET NO.
64	82-(4,5,6,7)-1RS-2	ST. CLAIR	388	369
	WHA# 1155D20	CONTRACT NO. 76R99		
	ILLINOIS	FED. AID PROJECT		

2/5/2025 1:07:13 PM

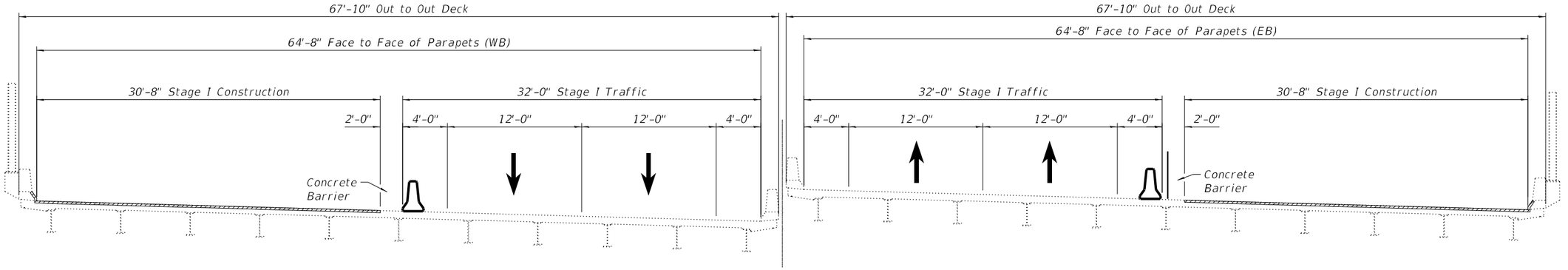

CROSS SECTION - STAGE I CONSTRUCTION

(Looking East)

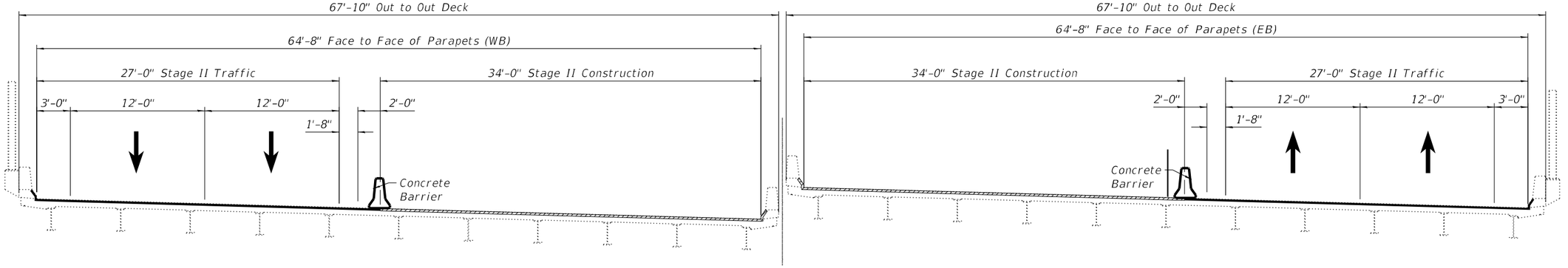

CROSS SECTION - STAGE II CONSTRUCTION

(Looking East)

MODEL: Staging Details
FILE NAME: S:\PROJECTS\2020\1155D20_IDOTDB\DESIGN\CAD_SHEETS\WO 11\08220308-0309\08220308-0309-0876R99-002-StgDtls.dgn

11/13/2024 1:38:00 PM

WILLETT HOFMANN & ASSOCIATES INC
ENGINEERING ARCHITECTURE LAND SURVEYING
809 EAST 2ND STREET, DIXON, IL 61021-0367
T: 815-284-3381 DESIGN FIRM: #184-000918

USER NAME =	DESIGNED - EEL	REVISED -
	CHECKED - DCB	REVISED -
PLOT SCALE =	DRAWN - TJA	REVISED -
PLOT DATE =	CHECKED - DCB	REVISED -

STATE OF ILLINOIS
DEPARTMENT OF TRANSPORTATION

STAGING DETAILS
S.N. 082-0308 (EB) & S.N. 082-0309 (WB)
STRUCTURAL SHEET 2 OF 4 SHEETS

F.A.I. RTE.	SECTION	COUNTY	TOTAL SHEETS	SHEET NO.
64	82-(4,5,6,7)-1RS-2	ST. CLAIR	388	370
	WHA# 1155D20	CONTRACT NO. 76R99		
	ILLINOIS	FED. AID PROJECT		

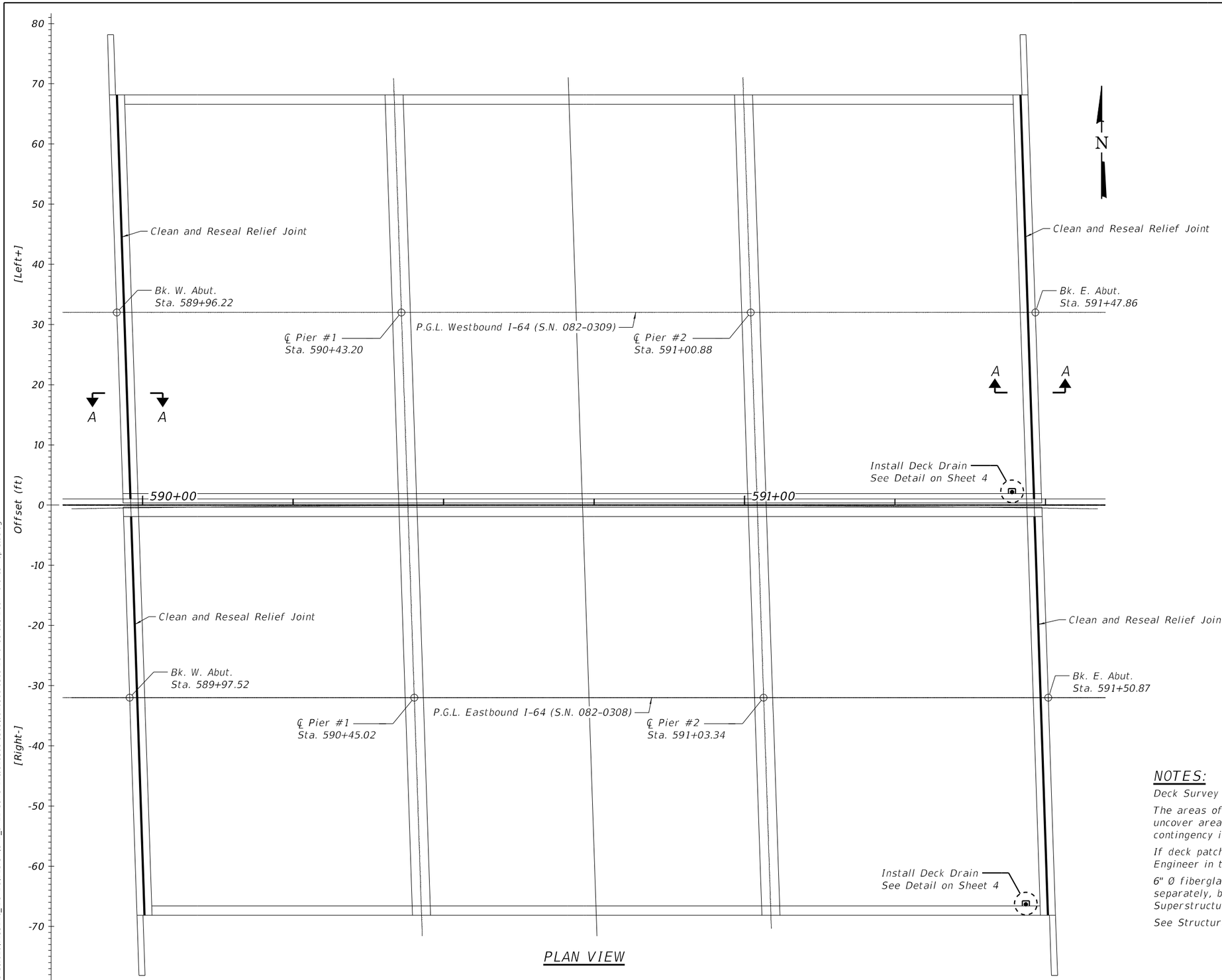

PLAN VIEW

NOTES:

Deck Survey 10-10-23.

The areas of deck repairs are estimated. The deck survey did not uncover areas of repair and the deck patching pay items are contingency items.

If deck patching is required, the limits shall be determined by the Engineer in the field.

6" Ø fiberglass deck drain and components will not be paid for separately, but shall be considered incidental to the "Concrete Superstructures" pay item. See Special Provisions.

See Structural Sheet 4 of 4 for Bill of Material and Section A-A.

MODEL: Deck Patches Top Side
FILE NAME: S:\PROJECTS\2020\1155D20_IDOT\DB\DESIGN\CAD_SHEETS\WO 1110820308-0309\0820308-0309-D876R99-003-Deck Patches Top Side.dgn

11/13/2024 1:38:00 PM

WILLETT HOFMANN & ASSOCIATES INC
ENGINEERING ARCHITECTURE LAND SURVEYING
809 EAST 2ND STREET, DIXON, IL 61021-0367
T: 815-284-3381 DESIGN FIRM: #184-000918

USER NAME =	DESIGNED - EEL	REVISED -	
	CHECKED - DCB	REVISED -	
PLOT SCALE =	DRAWN - RDA	REVISED -	
PLOT DATE =	CHECKED - DCB	REVISED -	

STATE OF ILLINOIS
DEPARTMENT OF TRANSPORTATION

DECK PATCHES TOP SIDE
S.N. 082-0308 (EB) & S.N. 082-0309 (WB)
STRUCTURAL SHEET 3 OF 4 SHEETS

F.A.I. RTE.	SECTION	COUNTY	TOTAL SHEETS	SHEET NO.
64	82-(4,5,6,7)-1RS-2	ST. CLAIR	388	371
	WHA# 1155D20	CONTRACT NO. 76R99		
	ILLINOIS	FED. AID PROJECT		

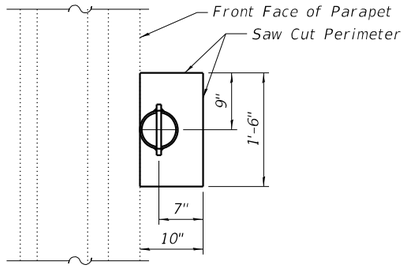

DECK DRAIN INSTALLATION

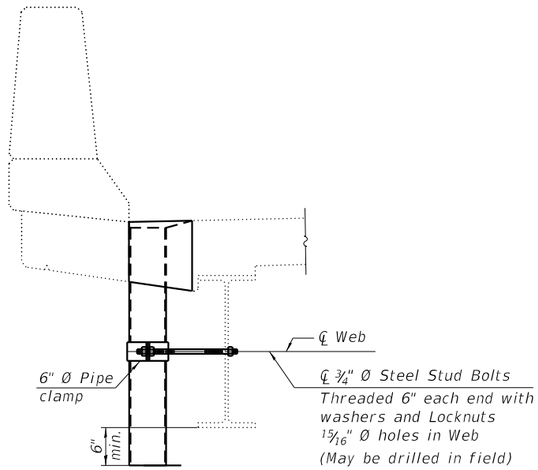

NEW DRAIN DETAIL

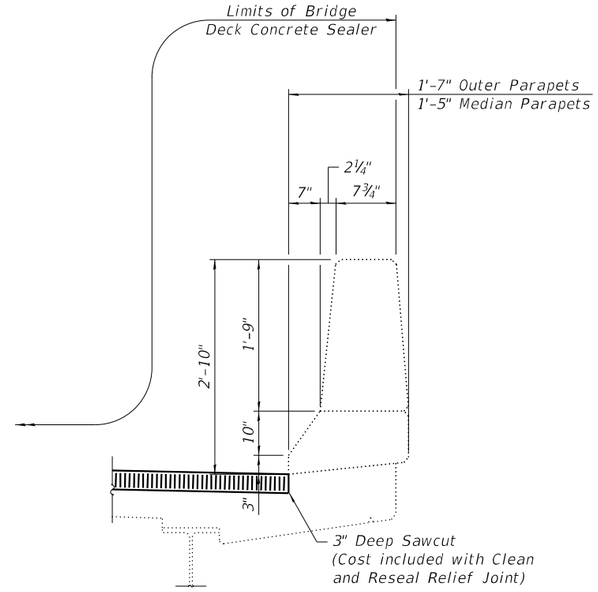

PARAPET DETAIL

BILL OF MATERIAL

	ITEM	UNIT	TOTAL
	Concrete Removal	Cu. Yd.	0.1
	Floor Drain	Each	2
	Concrete Superstructure	Cu. Yd.	0.1
*	Deck Slab Repair (Partial)	Sq. Yd.	20
*	Clean & Reseal Relief Joint	Foot	133
*	Bridge Deck Concrete Sealer	Sq. Ft.	30,688

NOTES:

The color of the floor drains should match the color of the fascia beam or girder.

Drains shall be located clear of all diaphragms.

* See Special Provisions.

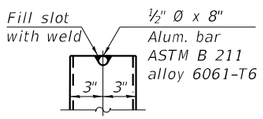

ALUMINUM TUBE

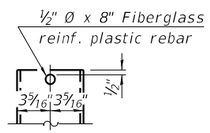

FIBERGLASS PIPE

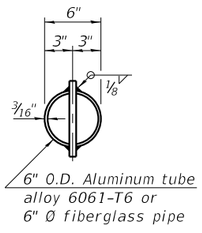

TOP PLAN
(Showing aluminum tube)

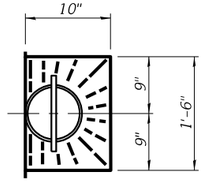

TOP PLAN

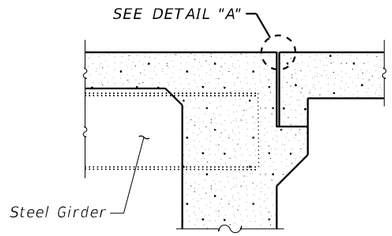

SECTION A-A

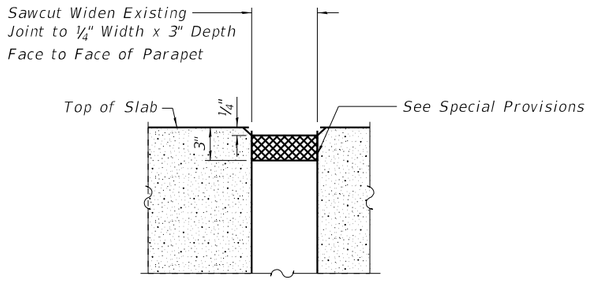

DETAIL "A"

MODEL: Bridge Relief Joint Repair Details
FILE NAME: S:\PROJECTS\2020\1155D20_IDOT\D8\DESIGN\CAD_SHEETS\WO 11\08202308-0309\08202308-0309-D876R99-004-Bridge Relief Jt Dtls.dgn

11/13/2024 1:38:01 PM

WILLETT HOFMANN & ASSOCIATES INC
ENGINEERING ARCHITECTURE LAND SURVEYING
809 EAST 2ND STREET, DIXON, IL 61021-0367
T: 815-284-3381 DESIGN FIRM: #184-000918

USER NAME =	DESIGNED - EEL	REVISED -	
	CHECKED - DCB	REVISED -	
PLOT SCALE =	DRAWN - TJA	REVISED -	
PLOT DATE =	CHECKED - DCB	REVISED -	

STATE OF ILLINOIS
DEPARTMENT OF TRANSPORTATION

BRIDGE RELIEF JOINT REPAIR DETAILS
S.N. 082-0308 (EB) & S.N. 082-0309 (WB)
STRUCTURAL SHEET 4 OF 4 SHEETS

F.A.I. RTE.	SECTION	COUNTY	TOTAL SHEETS	SHEET NO.
64	82-(4,5,6,7)-1RS-2	ST. CLAIR	388	372
	WHA# 1155D20	CONTRACT NO. 76R99		
	ILLINOIS	FED. AID PROJECT		

EXISTING STRUCTURE: S.N. 082-0179: Originally built in 1972 and rehabilitated in 1999 and 2005. The existing structure is a on two span welded plate girder supported on pile supported multi-column pier and PPC I-beam supported on vaulted abutments. This structure has an over all length of 324'-7" bk.-bk. of approach bents and a width 92'-0" out to out of deck.

Traffic maintained utilizing stage construction.

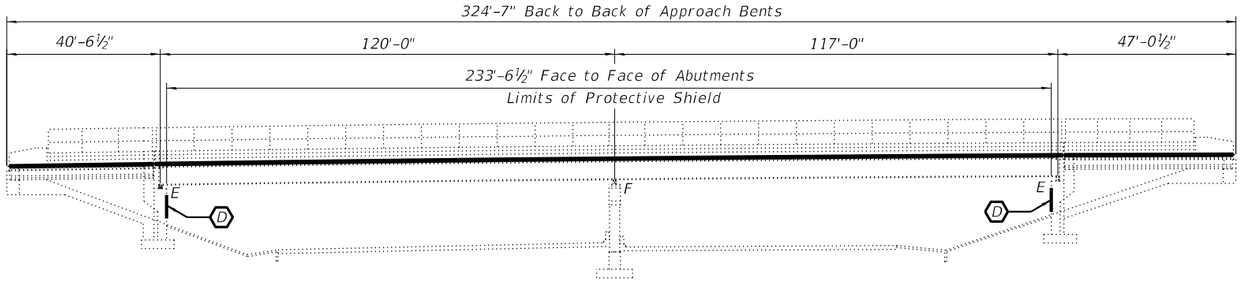

ELEVATION

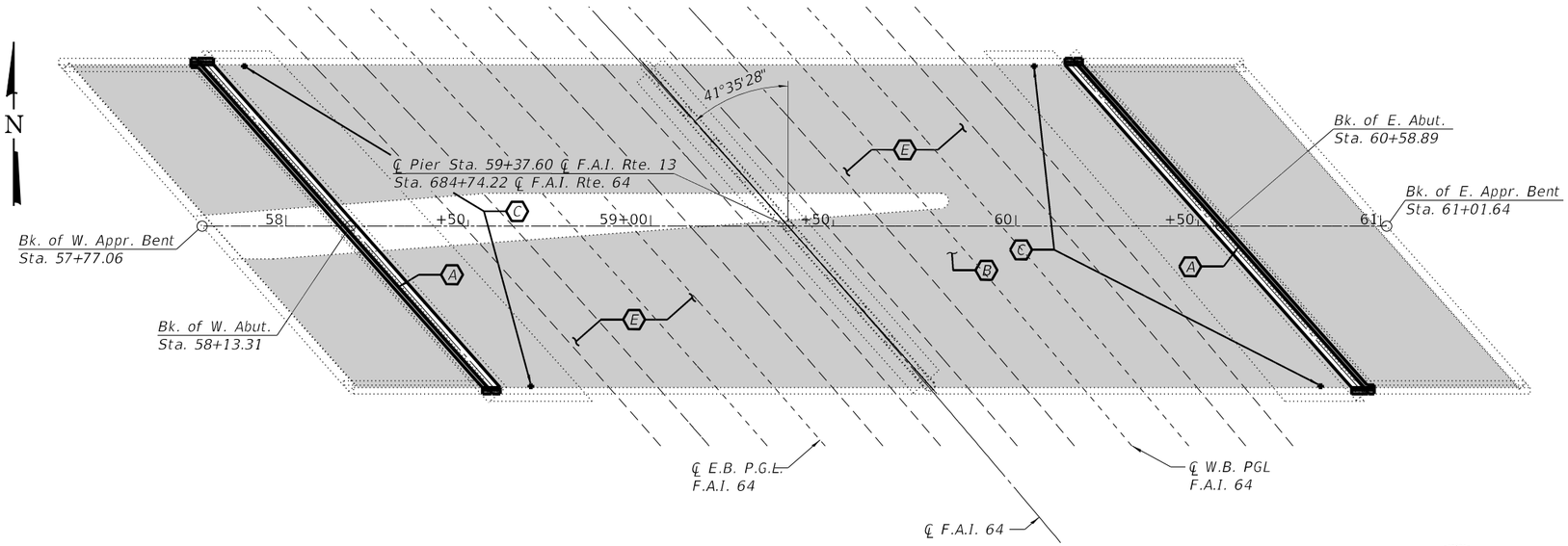

PLAN

TOTAL BILL OF MATERIAL

	ITEM	UNIT	SUPER	SUB	TOTAL
	Concrete Removal	Cu. Yd.	36.2	———	36.2
	Pipe Culvert Removal	Foot	———	20	20
	Protective Shield	Sq. Yd.	2,388	———	2,388
	Floor Drains	Each	4	———	4
	Concrete Superstructure	Cu. Yd.	35.1	———	35.1
	Reinforcement Bars, Epoxy Coated	Pound	6,670	———	6,670
	Bar Splicers	Each	56	———	56
	Preformed Joint Strip Seal	Foot	241	———	241
	Steel Flared End Sections 12"	Each	———	1	1
	Pipe Drains 12"	Foot	———	20	20
*	Bridge Deck Latex Concrete Overlay, 2¾"	Sq. Yd.	2,868	———	2,868
*	Containment and Disposal of Lead Paint Cleaning Residues No. 8	L Sum	1	———	1
*	Removing And Re-Erecting Existing Railing	Foot	80	———	80
*	Cleaning And Painting Steel Bridge No. 8	L Sum	1	———	1
*	Bridge Deck Scarification, 2½"	Sq. Yd.	2,868	———	2,868
*	Structural Repair of Concrete (Depth Equal to or Less Than 5 Inches)	Sq. Ft.	———	800	800
*	Structural Repair of Concrete (Depth Greater Than 5 Inches)	Sq. Ft.	———	160	160
*	Deck Slab Repair (Full Depth, Type I)	Sq. Yd.	70	1	71
*	Deck Slab Repair (Full Depth, Type II)	Sq. Yd.	100	———	100
*	Diamond Grinding (Bridge Section)	Sq. Yd.	2,728	———	2,728
*	Bridge Deck Grooving (Longitudinal)	Sq. Yd.	2,087	———	2,087
*	Cleaning And Painting Exposed Rebar	L Sum	1	———	1
*	Bridge Deck Concrete Sealer	Sq. Ft.	30,995	———	30,995

* See Special Provisions

INDEX OF SHEETS LOCATION 8

1 General Plan and Elevation
2 General Data
3-4 Staging Details
5 Deck Repair Details
6 Floor Drain Details
7-9 Joint Replacement Details
10 Modified Preformed Joint Strip Seal
11 Abutment Repair Details
12 Bar Splicer Assembly and Mechanical Splicer Details

SCOPE OF WORK:

- (A) Remove existing expansion joints at abutments and replace with preformed joint strip sealer. See structural sheets 6-9 of 10.
- (B) Deck repair. See structural sheet 4 of 10.
- (C) Remove and Replace Floor Drains, See structural sheets 5 of 10.
- (D) Abutment Repair Details, See structural sheets 10 of 10.
- (E) Preform Bridge Deck Scarification and Latex Overlay.

ERIK E. LARSON
081-008533
LICENSED STRUCTURAL ENGINEER OF ILLINOIS

DATE: 1/31/2025
EXPIRES 11/30/26

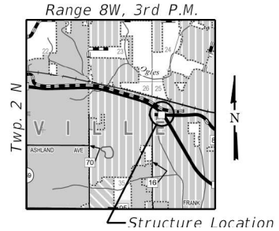

LOCATION SKETCH

GENERAL PLAN AND ELEVATION
U.S. 50 OVER F.A.I. ROUTE 64
SEC. 82-(4,5,6,7)-1RS-2
ST. CLAIR COUNTY
STATION 684+74.22
STRUCTURE NO. 082-0179

WILLETT HOFMANN & ASSOCIATES INC
ENGINEERING ARCHITECTURE LAND SURVEYING
809 EAST 2ND STREET, DIXON, IL 61021-0367
T: 815-284-3381 DESIGN FIRM: #184-000918

USER NAME =	DESIGNED - SM	REVISED -	
	CHECKED - DCB	REVISED -	
PLOT SCALE =	DRAWN - FDL	REVISED -	
PLOT DATE =	CHECKED - DCB	REVISED -	

STATE OF ILLINOIS
DEPARTMENT OF TRANSPORTATION

STRUCTURAL SHEET 1 OF 12 SHEETS

F.A.I. RTE.	SECTION	COUNTY	TOTAL SHEETS	SHEET NO.
64	82-(4,5,6,7)-1RS-2	ST. CLAIR	388	373
WHA# 1155D20		CONTRACT NO. 76R99		
	ILLINOIS	FED. AID PROJECT		

MODEL: GPE
FILE NAME: S:\PROJECTS\2020\1155D20_IDOT\DB\DESIGN\CAD_SHEETS\WO 11\08201791\08201791-D876R99-001-GPE.dgn
2/5/2025 1:07:23 PM

GENERAL NOTES:

This structure will retain the same number: 082-0179.

Two way traffic shall be maintained during rehabilitation of existing structure.

Prior to pouring the new concrete deck section, all heavy or loose rust, loose mill scale, and other loose or potentially detrimental foreign material shall be removed from the surfaces in contact with concrete. Tightly adhered paint may remain unless otherwise noted. Removal shall be accomplished by methods that will not damage the steel and the cost will be included in the pay item covering removal of the existing concrete.

The existing structural steel coating contains lead. The contractor shall take appropriate precautions to deal with the presence of lead on this project.

Repair dimensions and locations shown are estimates and will be determined by the Engineer in the field.

Joint openings shall be adjusted according to Article 520.04 of the Standard Specifications when the polymer concrete nosing is poured at an ambient temperature other than 50°F.

Existing reinforcement bars extending into the removal area shall be cleaned, straightened and incorporated into the new construction. Any reinforcement bars that are damaged during the concrete removal shall be replaced with approved bar splicer or anchorage system. Cost included with Concrete Removal.

The SW shoulder pipe drain shall be replaced. The replacement will be paid for by the pay items "Pipe Culvert Removal, Pipe Drains 12", and "Steel Flared End Sections 12". The plan quantities for these pay items are estimated. The engineer shall determine the limits of these pay items in the field.

Plan dimensions and details relative to the existing structure have been taken from existing plans are Subject to nominal construction variations. The contractor shall field verify existing dimensions and details affecting new construction and make necessary approved adjustments prior to construction or ordering of materials. Such variations shall not be cause for additional compensation for a change in scope of the work, however, the contractor will be paid for the quantity actually furnished at the unit price bid for the work.

Cleaning and painting of the existing steel structural steel is required for this structure and shall be performed as specified in the special provisions for "cleaning and painting existing Steel structures." all beams, bearings and other structural steel within 5ft (measured along the beam) of either side of deck joints shall be cleaned per near white blast cleaning SSPC-SP10. The exterior Surfaces and bottom of the bottom flange of the fascia beams shall be cleaned per commercial grade Power tool cleaning - SSPC 15.

The designated areas cleaned per near white blast cleaning and per commercial grade power tool cleaning shall be painted according to the requirements of moisture cured urethane paint system. The color of the final finish coat for all interior surfaces shall be Gray, Munsell No. 5B 7/1. The color of the final finish coat for the exterior and bottom flange of the fascia beams shall match the existing paint, which shall be Gray, Munsell No. 5B 7/1.

SSPC QP1 certification is required for this contract.

Bridge deck concrete sealer includes the top of decks, approach slabs, and the front faces and tops of curbs and parapets.

LOADING HS20-44

Allow 25#/sq. ft. for future wearing surface.

DESIGN SPECIFICATIONS (EXISTING)

1996 AASHTO Specifications, with
1997 thru 2002 Interim specifications

DESIGN SPECIFICATIONS (NEW)

2002 AASHTO Standard Specifications
for Highway Bridges, 17th. Edition

DESIGN STRESSES

FIELD UNITS (EXISTING CONSTRUCTION)

f'c = 3,000 psi (Superstructure - 1972 original)
fy = 40,000 psi (Reinforcement - 1972 original)
fy = 60,000 psi (Reinforcement - 2005 rehab.)

FIELD UNITS (NEW CONSTRUCTION)

f'c = 4,000 psi
fy = 60,000 psi (Reinforcement)

GENERAL DATA
U.S. 50 OVER F.A.I. ROUTE 64
SEC. 82-(4,5,6,7)-1RS-2
ST. CLAIR COUNTY
STATION 684+74.22
STRUCTURE NO. 082-0179

WILLETT HOFMANN & ASSOCIATES INC
ENGINEERING ARCHITECTURE LAND SURVEYING
809 EAST 2ND STREET, DIXON, IL 61021-0367
T: 815-284-3381 DESIGN FIRM: #184-000918

USER NAME =	DESIGNED - SM	REVISED -	
	CHECKED - DCB	REVISED -	
PLOT SCALE =	DRAWN - FDL	REVISED -	
PLOT DATE =	CHECKED - DCB	REVISED -	

STATE OF ILLINOIS
DEPARTMENT OF TRANSPORTATION

STRUCTURAL SHEET 2 OF 12 SHEETS

F.A.I. RTE.	SECTION	COUNTY	TOTAL SHEETS	SHEET NO.
64	82-(4,5,6,7)-1RS-2	ST. CLAIR	388	374
	WHA# 1155D20	CONTRACT NO. 76R99		
	ILLINOIS	FED. AID PROJECT		

MODEL: GPE
FILE NAME: S:\PROJECTS\2020\1155D20_IDOTD8\DESIGN\CAD_SHEETS\WO 11108201790820179-D876R99-002-GenData.dgn

11/13/2024 1:38:05 PM

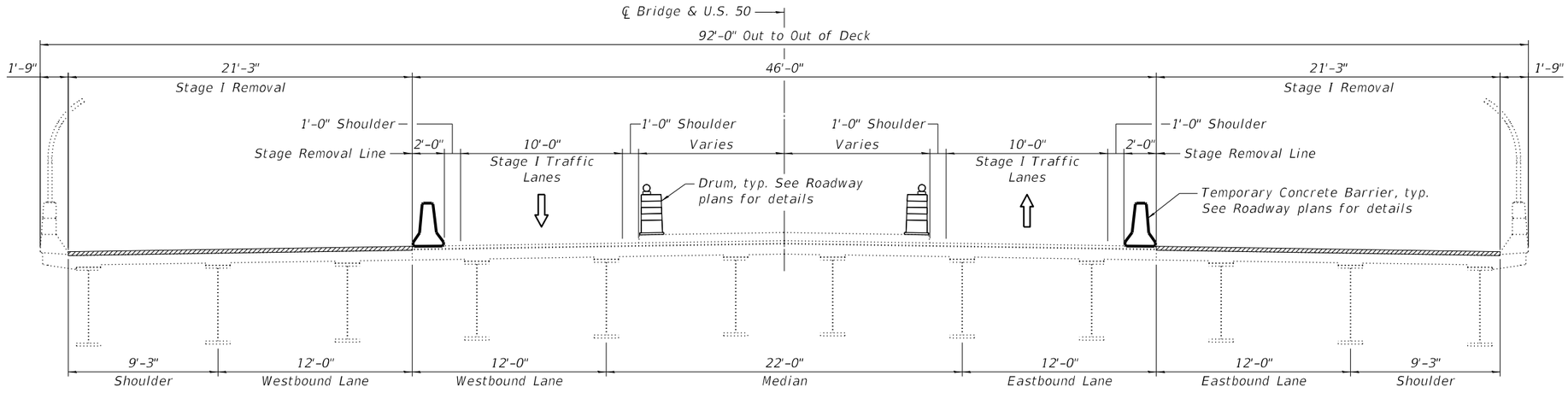

STAGE I REMOVAL

(Looking East)
(Showing West Deck, See Roadway Plans for East side without median)

LEGEND

Bridge Deck Scarification 2½"

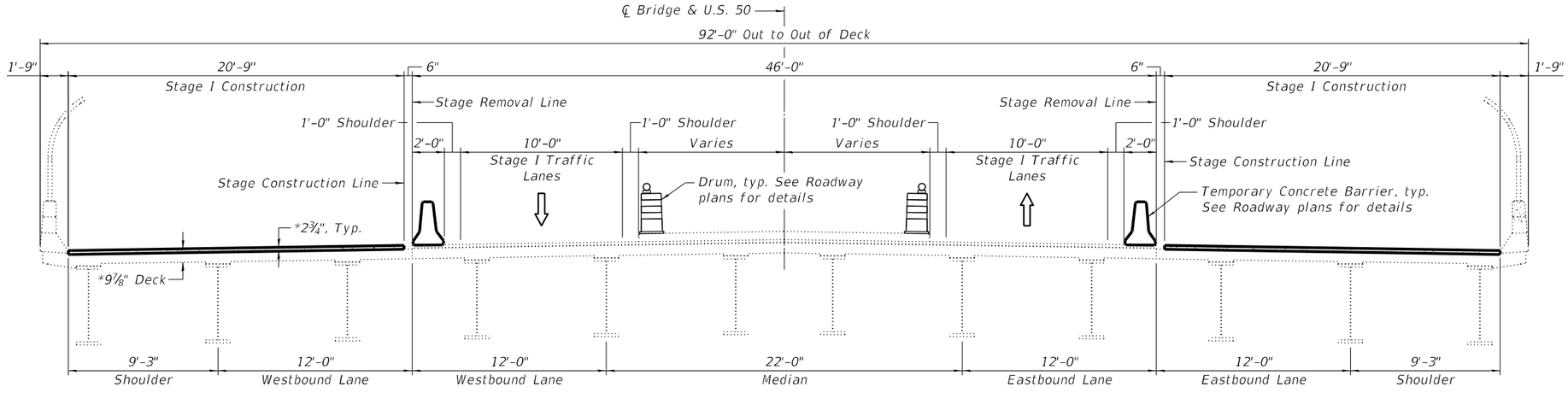

STAGE I CONSTRUCTION

(Looking East)
(Showing West Deck, See Roadway Plans for East side without median)

NOTES:

*Prior to ¼" Diamond Grinding (Bridge Section)

WILLETT HOFMANN & ASSOCIATES INC
ENGINEERING ARCHITECTURE LAND SURVEYING
809 EAST 2ND STREET, DIXON, IL 61021-0367
T: 815-284-3381 DESIGN FIRM: #184-000918

USER NAME =	DESIGNED - SM	REVISED -	
	CHECKED - DCB	REVISED -	
PLOT SCALE =	DRAWN - TJA	REVISED -	
PLOT DATE =	CHECKED - DCB	REVISED -	

STATE OF ILLINOIS
DEPARTMENT OF TRANSPORTATION

STAGING DETAILS
STRUCTURE NO. 082-0179
STRUCTURAL SHEET 3 OF 12 SHEETS

F.A.I. RTE.	SECTION	COUNTY	TOTAL SHEETS	SHEET NO.
64	82-(4,5,6,7)-1RS-2	ST. CLAIR	388	375
	WHA# 1155D20	CONTRACT NO. 76R99		
	ILLINOIS	FED. AID PROJECT		

MODEL: Default
FILE NAME: S:\PROJECTS\2020\1155D20_IDOT\08\DESIGN\CAD_SHEETS\WO 11\08201790820179-D876R99-003-004StgDtl.dgn
11/13/2024 1:38:06 PM

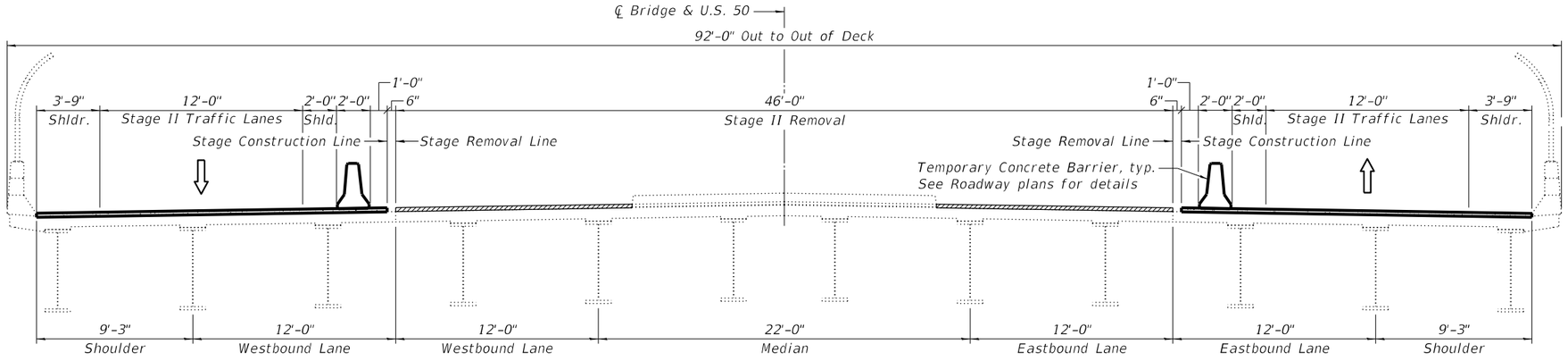

STAGE II REMOVAL

(Looking East)
(Showing West Deck, See Roadway Plans for East side without median)

LEGEND

Bridge Deck Scarification 2½"

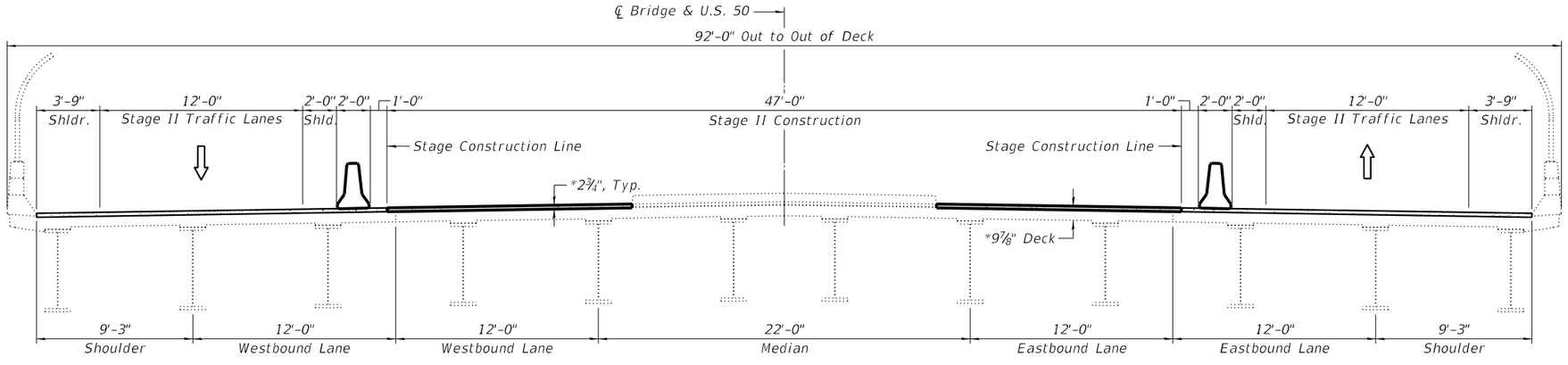

STAGE II CONSTRUCTION

(Looking East)
(Showing West Deck, See Roadway Plans for East side without median)

NOTES:

*Prior to ¼" Diamond Grinding (Bridge Section)

WILLETT HOFMANN & ASSOCIATES INC
ENGINEERING ARCHITECTURE LAND SURVEYING
809 EAST 2ND STREET, DIXON, IL 61021-0367
T: 815-284-3381 DESIGN FIRM: #184-000918

USER NAME =	DESIGNED - SM	REVISED -
	CHECKED - DCB	REVISED -
PLOT SCALE =	DRAWN - TJA	REVISED -
PLOT DATE =	CHECKED - DCB	REVISED -

STATE OF ILLINOIS
DEPARTMENT OF TRANSPORTATION

STAGING DETAILS
STRUCTURE NO. 082-0179
STRUCTURAL SHEET 4 OF 12 SHEETS

F.A.I. RTE.	SECTION	COUNTY	TOTAL SHEETS	SHEET NO.
64	82-(4,5,6,7)-1RS-2	ST. CLAIR	388	376
	WHA# 1155D20	CONTRACT NO. 76R99		
	ILLINOIS	FED. AID PROJECT		

MODEL: Default
FILE NAME: S:\PROJECTS\2020\1155D20_IDOT\D8\DESIGN\CAD_SHEETS\WO 11\08201790820179-D876R99-003-004StgDtl.dgn
11/13/2024 1:38:06 PM

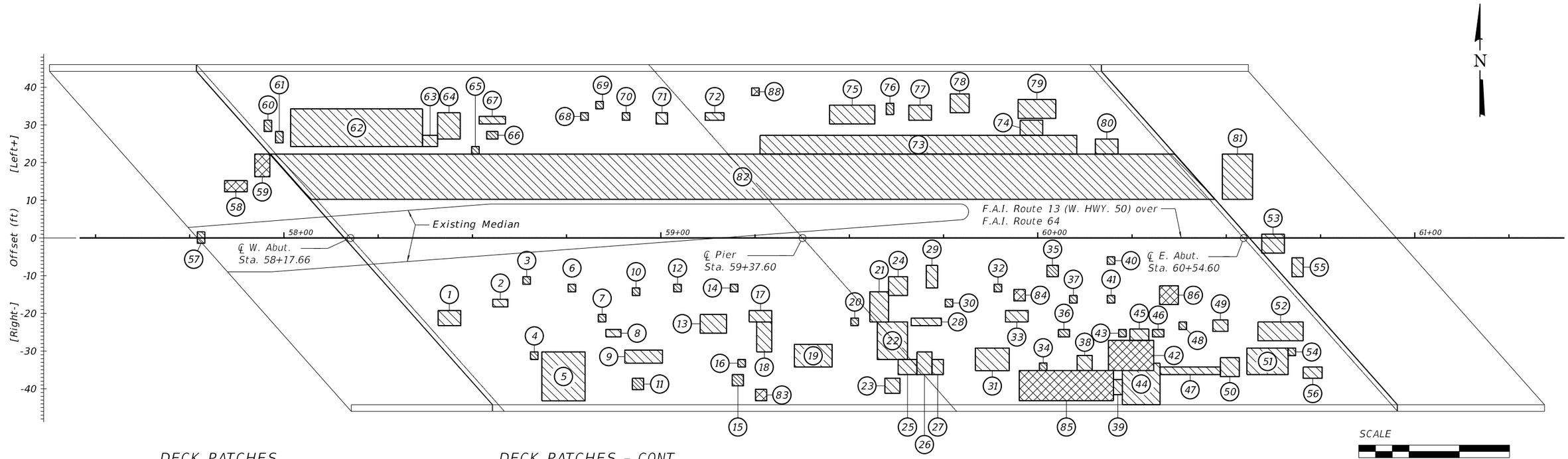

PLAN VIEW

SCALE

0' 8' 16' 24'

DECK PATCHES

Patch #	Start Sta	End Sta	Offsets (ft) From	Offsets (ft) To	Length (ft.)	Width (ft.)	Area (sy)	Full or Partial Depth
1	58+41	58+47	19,25 Rt	23,25 Rt	6	4	2,67	P
2	58+55	58+59	16,25 Rt	18,25 Rt	4	2	0,89	P
3	58+63	58+65	10,25 Rt	12,25 Rt	2	2	0,44	P
4	58+65	58+67	30,25 Rt	32,25 Rt	2	2	0,44	P
5	58+68	58+80	30,25 Rt	43,25 Rt	11,5	13	16,61	P
6	58+75	58+77	12,25 Rt	14,25 Rt	2	2	0,44	P
7	58+83	58+85	20,25 Rt	22,25 Rt	2	2	0,44	P
8	58+85	58+89	24,25 Rt	26,25 Rt	4	2	0,89	P
9	58+90	59+00	29,75 Rt	33,25 Rt	10	3,5	3,89	P
10	58+92	58+94	13,25 Rt	15,25 Rt	2	2	0,44	P
11	58+92	58+95	37,25 Rt	40,25 Rt	3	3	1,00	P
12	59+03	59+05	12,25 Rt	14,25 Rt	2	2	0,44	P
13	59+10	59+17	20,25 Rt	25,25 Rt	7	5	3,89	P
14	59+18	59+20	12,24 Rt	14,25 Rt	2	2,01	0,45	P
15	59+19	59+22	36,25 Rt	39,25 Rt	3	3	1,00	P
16	59+20	59+22	32,25 Rt	34,25 Rt	2	2	0,44	P
17	59+23	59+29	19,25 Rt	22,25 Rt	6	3	2,00	P
18	59+25	59+29	22,25 Rt	30,25 Rt	4	8	3,56	P
19	59+35	59+45	28,25 Rt	34,25 Rt	10	6	6,67	P
20	59+50	59+52	21,25 Rt	23,25 Rt	2	2	0,44	P
21	59+55	59+60	14,25 Rt	22,25 Rt	5	8	4,44	P
22	59+57	59+65	22,25 Rt	32,25 Rt	8	10	8,89	P
23	59+59	59+63	37,25 Rt	41,25 Rt	4	4	1,78	P
24	59+60	59+65	10,25 Rt	15,25 Rt	5	5	2,78	P
25	59+63	59+68	32,25 Rt	36,25 Rt	5	4	2,22	P
26	59+68	59+72	30,25 Rt	36,25 Rt	4	6	2,67	P
27	59+72	59+75	32,25 Rt	36,25 Rt	3	4	1,33	P
28	59+66	59+74	21,25 Rt	23,25 Rt	8	2	1,78	P
29	59+70	59+73	7,25 Rt	13,25 Rt	3	6	2,00	P
30	59+75	59+77	16,25 Rt	18,25 Rt	2	2	0,44	P
31	59+83	59+92	29,25 Rt	35,25 Rt	9	6	6,00	P
32	59+88	59+90	12,25 Rt	14,25 Rt	2	2	0,44	P
33	59+91	59+97	19,25 Rt	22,25 Rt	6	3	2,00	P
34	60+00	60+02	33,25 Rt	35,25 Rt	2	2	0,44	P
35	60+02	60+05	7,25 Rt	10,25 Rt	3	3	1,00	P
36	60+05	60+08	24,25 Rt	26,25 Rt	3	2	0,67	P
37	60+08	60+10	15,25 Rt	17,25 Rt	2	2	0,44	P
38	60+10	60+14	31,25 Rt	35,25 Rt	4	4	1,78	P
39	60+20	60+22	37,58 Rt	41,58 Rt	2	4	0,89	P
40	60+18	60+20	5 Rt	7 Rt	2	2	0,44	P
41	60+18	60+20	15,25 Rt	17,25 Rt	2	2	0,44	P
42	60+19	60+31	27,17 Rt	35,17 Rt	12	8	10,67	F
43	60+21	60+23	24,25 Rt	26,25 Rt	2	2	0,44	P

DECK PATCHES – CONT.

Patch #	Start Sta	End Sta	Offsets (ft) From	Offsets (ft) To	Length (ft.)	Width (ft.)	Area (sy)	Full or Partial Depth
44	60+22	60+32	33,25 Rt	44,25 Rt	10	11	12,22	P
45	60+24	60+29	24,25 Rt	27,25 Rt	5	3	1,67	P
46	60+30	60+33	24,25 Rt	26,25 Rt	3	2	0,67	P
47	60+32	60+48	34,25 Rt	36,25 Rt	16	2	3,56	P
48	60+37	60+39	22,25 Rt	24,25 Rt	2	2	0,44	P
49	60+46	60+50	21,75 Rt	24,75 Rt	4	3	1,33	P
50	60+48	60+53	31,75 Rt	36,75 Rt	5	5	2,78	P
51	60+55	60+66	29,25 Rt	36,25 Rt	11	7	8,56	P
52	60+58	60+70	22,25 Rt	27,25 Rt	12	5	6,67	P
53	60+59	60+65	1 Lt	4 Rt	6	5	3,33	P
54	60+66	60+68	29,25 Rt	31,25 Rt	2	2	0,44	P
55	60+67	60+70	5,25 Rt	10,25 Rt	3	5	1,67	P
56	60+70	60+75	34,25 Rt	37,25 Rt	5	3	1,67	P
57	57+77	57+79	1,38 Lt	1,62 Rt	2	3	0,67	P
58	57+84	57+90	12,25 Lt	15,25 Lt	6	3	2,00	F
59	57+92	57+96	16,25 Lt	22,25 Lt	4	6	2,67	F
60	57+95	57+97	28,25 Lt	31,25 Lt	2	3	0,67	P
61	57+98	58+00	25,25 Lt	28,25 Lt	2	3	0,67	P
62	58+02	58+37	24,25 Lt	34,25 Lt	35	10	38,89	P
63	58+37	58+41	24,25 Lt	27,25 Lt	4	3	1,33	P
64	58+41	58+47	26,25 Lt	33,25 Lt	6	7	4,67	P
65	58+50	58+52	22,25 Lt	24,25 Lt	2	2	0,44	P
66	58+52	58+59	26,25 Lt	28,25 Lt	7	2	1,56	P
67	58+54	58+57	30,25 Lt	32,25 Lt	3	2	0,67	P
68	58+79	58+81	31,25 Lt	33,25 Lt	2	2	0,44	P
69	58+83	58+85	34,25 Lt	36,25 Lt	2	2	0,44	P
70	58+90	58+92	31,25 Lt	33,25 Lt	2	2	0,44	P
71	58+99	59+02	30,25 Lt	33,25 Lt	3	3	1,00	P
72	59+12	59+17	31,25 Lt	33,25 Lt	5	2	1,11	P
73	59+26	60+10	22,25 Lt	27,25 Lt	84	5	46,67	P
74	59+95	60+01	27,25 Lt	31,25 Lt	6	4	2,67	P
75	59+45	59+57	30,25 Lt	35,25 Lt	12	5	6,67	P
76	59+60	59+62	32,75 Lt	35,75 Lt	2	3	0,67	P
77	59+62	59+72	31,25 Lt	35,25 Lt	10	4	4,44	P
78	59+77	59+82	33,25 Lt	38,25 Lt	5	5	2,78	P
79	59+95	60+05	31,75 Lt	36,75 Lt	10	5	5,56	P
80	60+15	60+21	22,25 Lt	26,25 Lt	6	4	2,67	P
81	60+49	60+57	10,25 Lt	22,25 Lt	8	12	10,67	P
82	57+96	60+47	10,25 Lt	22,25 Lt	250,55	12	334,07	P
83	59+25	59+28	40,16 Rt	43,16 Rt	3	3	1,00	F
84	59+94	59+97	13,68 Lt	16,68 Rt	3	3	1,00	F
85	59+95	60+20	35,17 Rt	43,17 Rt	25	8	22,23	F
86	60+19	60+31	27,17 Rt	35,17 Rt	12	8	10,67	F

LEGEND

Deck Slab Repair (Partial – For Information Only)

Deck Slab Repair (Full Depth, Type II)

TOTAL BILL OF MATERIAL

ITEM	UNIT	TOTAL
Bridge Deck Latex Concrete Overlay, 2¾"	Sq. Yd.	2,868
Bridge Deck Scarification 2½"	Sq. Yd.	2,868
Deck Slab Repair (Full Depth, Type I)	Sq. Yd.	70
Deck Slab Repair (Full Depth, Type II)	Sq. Yd.	100
Diamond Grinding (Bridge Section)	Sq. Yd.	2,728
Bridge Deck Grooving (Longitudinal)	Sq. Yd.	2,087

NOTES:

The areas of deck repairs are estimated. The deck survey and schedule shows 50.2 sq. yd. of Deck Slab repair (Full Depth, Type II) and 605.2 sq. yd. of Deck Slab Repair (Partial) approximately. Plan quantities has been increased to 100 sq. yd. for Deck Slab repair (Full Depth, Type II) and 700 sq. yd. for Deck Slab Repair (Partial).

The Engineer shall show actual patch locations on as-built plans.

Deck Survey 10-10-23.

No areas of Deck Slab Repair (Full Depth, Type I) were noted during the deck inspection. These pay items are contingencies based on 10% of the plan quantity area of Deck Slab Repair (Partial). If required, the Engineer shall determine the limits of these pay items in the field.

WILLETT HOFMANN & ASSOCIATES INC
ENGINEERING ARCHITECTURE LAND SURVEYING
809 EAST 2ND STREET, DIXON, IL 61021-0367
T: 815-284-3381 DESIGN FIRM: #184-000918

USER NAME =	DESIGNED - RB	REVISED -
	CHECKED - SAB	REVISED -
PLOT SCALE =	DRAWN - RDA	REVISED -
PLOT DATE =	CHECKED - SAB	REVISED -

STATE OF ILLINOIS
DEPARTMENT OF TRANSPORTATION

DECK PATCHES TOP SIDE
STRUCTURE NO. 082-0179
STRUCTURAL SHEET 5 OF 12 SHEETS

F.A.I. RTE.	SECTION	COUNTY	TOTAL SHEETS	SHEET NO.
64	82-(4,5,6,7)-1RS-2	ST. CLAIR	388	377
	WHA# 1155D20	CONTRACT NO. 76R99		
	ILLINOIS	FED. AID PROJECT		

MODEL: Deck Patches Top Side
FILE NAME: S:\PROJECTS\2020\1155D20_IDOT\D8\DESIGN\CAD_SHEETS\WO 11\08201179\0820179-D876R99-005-Deck Patches Top Side.dgn

11/13/2024 1:38:07 PM

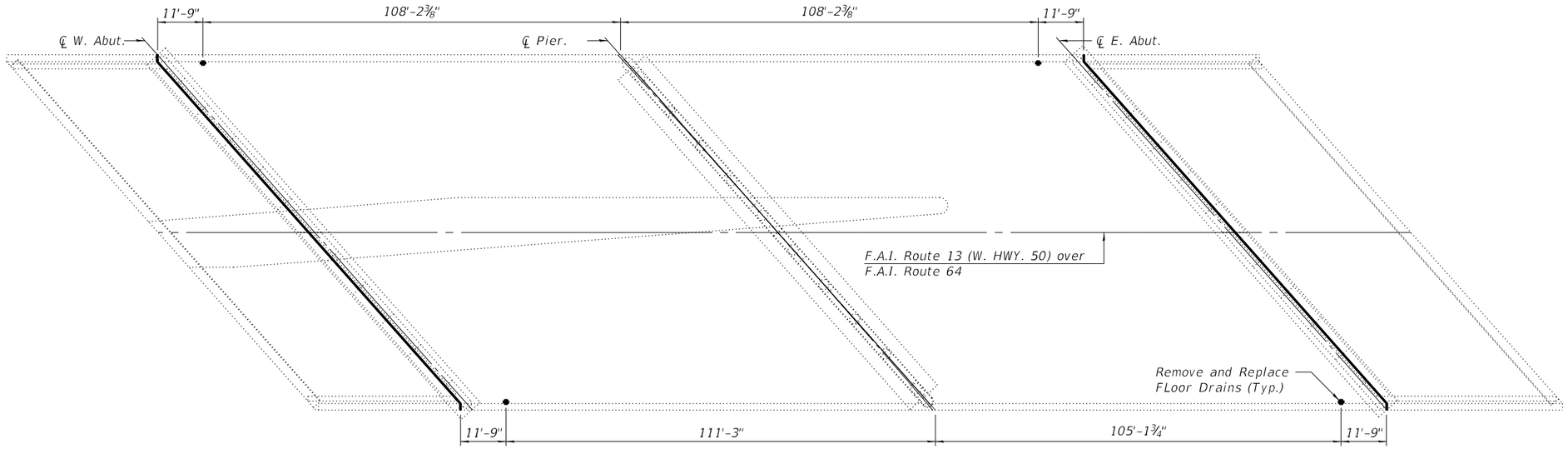

PLAN VIEW

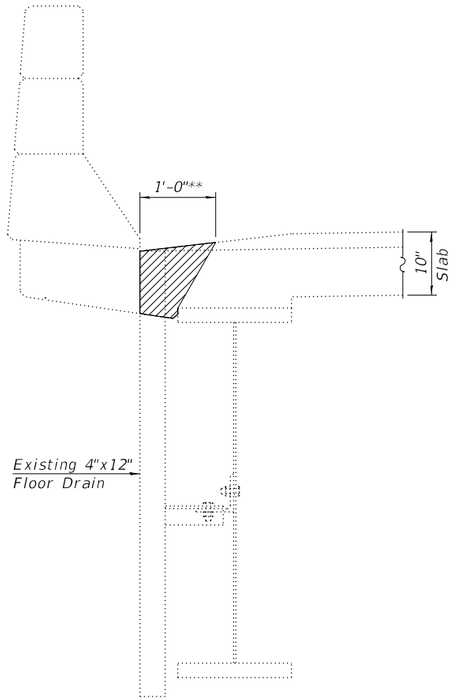

SECTION THRU DECK

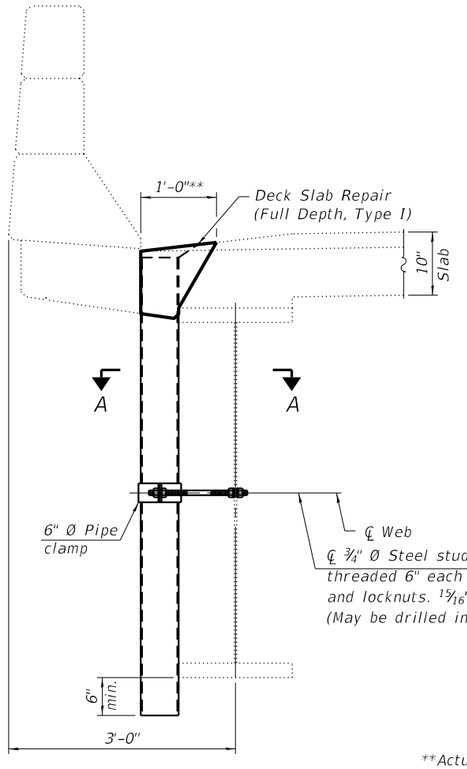

DRAIN REPLACEMENT DETAIL

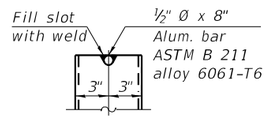

ALUMINUM TUBE

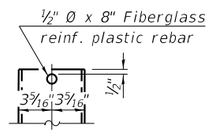

FIBERGLASS PIPE

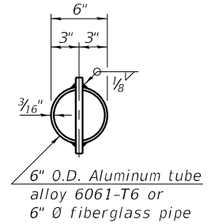

TOP PLAN
(Showing aluminum tube)

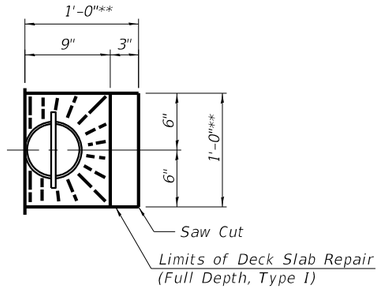

TOP PLAN DECK REPAIR AT PROPOSED DRAINS

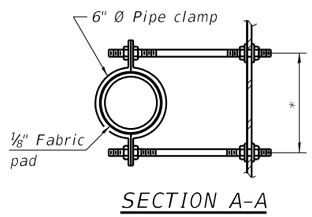

SECTION A-A

**Actual dimensions of Deck Slab Repair shall be determined by the Field Engineer

*Dimension as required by pipe clamp

NOTES:

Fiberglass pipe shall conform to ASTM D2996, with short-time rupture strength hoop tensile stress of 30,000 p.s.i. minimum.

The exterior surfaces of the floor drains shall be painted according to Article 506 with the finish coat as specified. The exterior surfaces of the drains shall be cleaned according to the Society of Protective Coating's Spec. SSPC-SP1 prior to painting.

The top portion of aluminum floor drains shall be coated to minimize reaction with wet concrete.

The clamping device shall be galvanized according to AASHTO M 232. Cost of clamping device included with Floor Drains.

Cost of removing the existing floor drains will not be paid for separately but shall be included with the pay item Floor Drains.

The color of the floor drains should match the color of the fascia beam or girder.

BILL OF MATERIAL

Item	Unit	Total
Floor Drains	Each	4
Deck Slab Repair (Full Depth, Type I)	Sq. Yd.	1

MODEL: Floor Drains
FILE NAME: S:\PROJECTS\2020\1155D20_IDOTDB\DESIGN\CAD_SHEETS\WO 11\08201790820179-D876K99-006-FloorDrainDtl.dgn
11/13/2024 1:38:07 PM

WILLETT HOFMANN & ASSOCIATES INC
ENGINEERING ARCHITECTURE LAND SURVEYING
809 EAST 2ND STREET, DIXON, IL 61021-0367
T: 815-284-3381 DESIGN FIRM: #184-000918

USER NAME =	DESIGNED - SM	REVISED -	
	CHECKED - DCB	REVISED -	
PLOT SCALE =	DRAWN - FDL	REVISED -	
PLOT DATE =	CHECKED - DCB	REVISED -	

STATE OF ILLINOIS
DEPARTMENT OF TRANSPORTATION

FLOOR DRAIN DETAILS
STRUCTURE NO. 082-0179
STRUCTURAL SHEET 6 OF 12 SHEETS

F.A.I. RTE.	SECTION	COUNTY	TOTAL SHEETS	SHEET NO.
64	82-(4,5,6,7)-1RS-2	ST. CLAIR	388	378
	WHA# 1155D20	CONTRACT NO. 76R99		
	ILLINOIS FED. AID PROJECT			

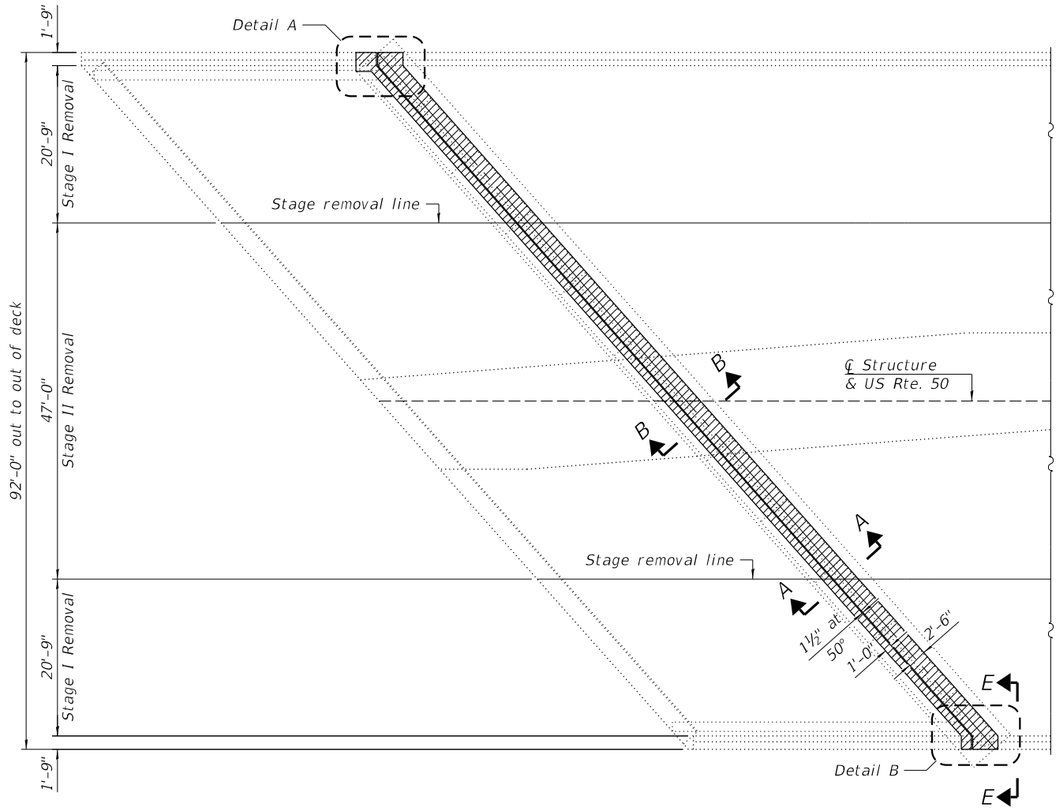

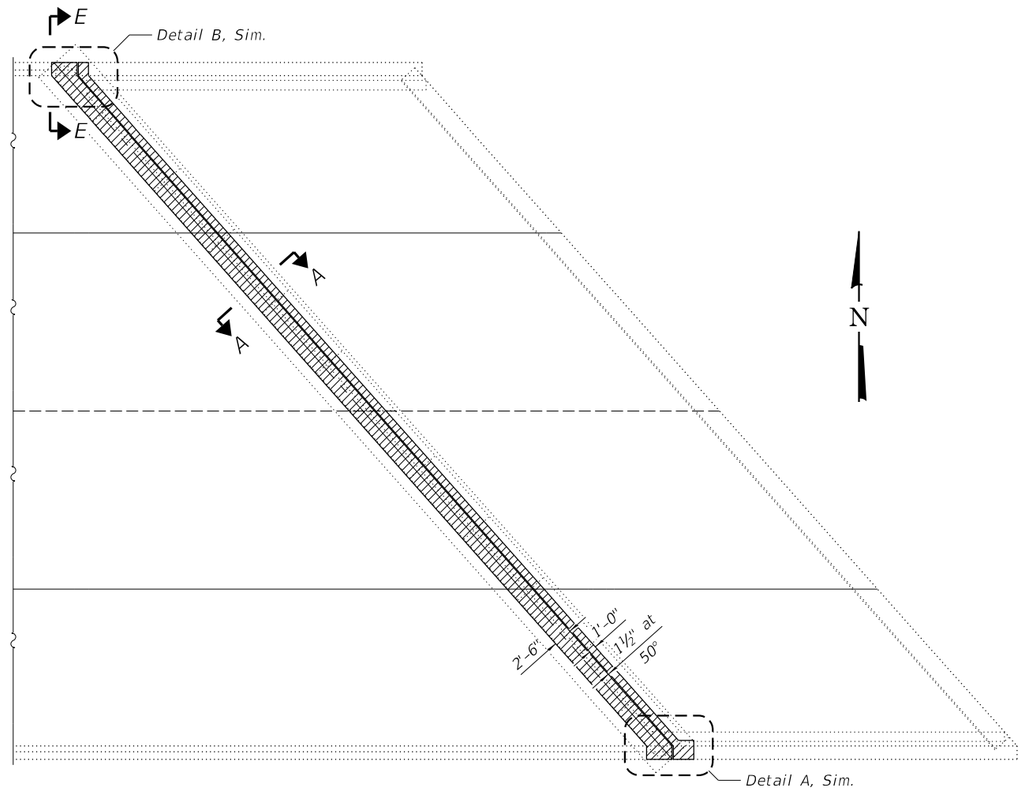

EXISTING PARTIAL PLAN VIEW

LEGEND

- Concrete removal
- Concrete removal at Vault Curtain Wall only
- Bridge Deck Scarification 2½"

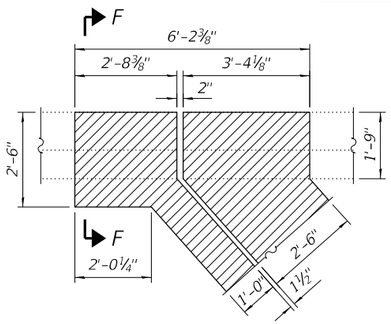

DETAIL A

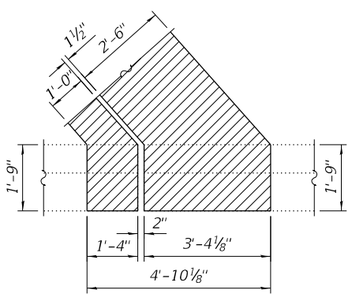

DETAIL B

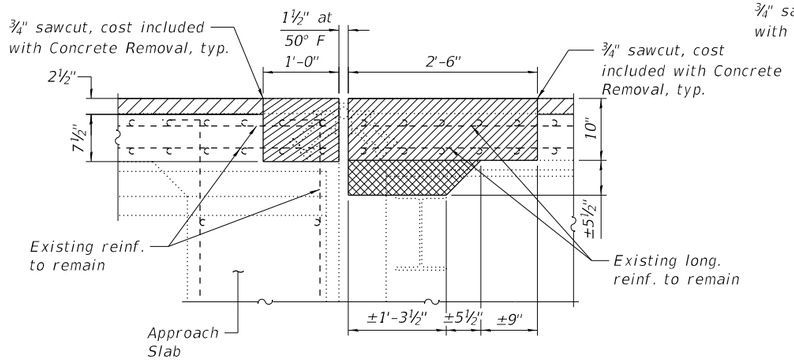

SECTION A-A
(Removal)

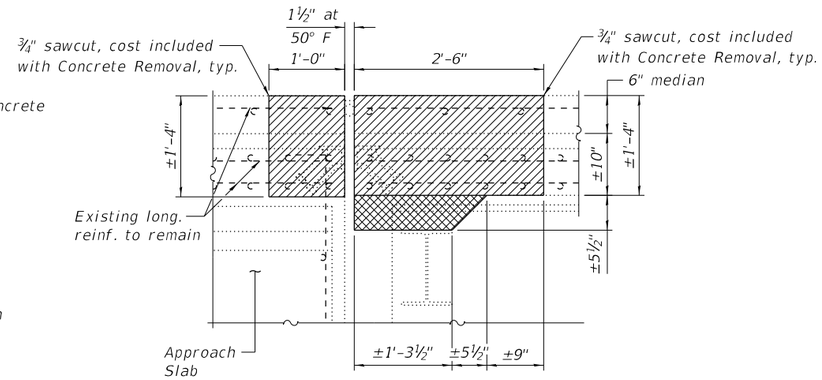

SECTION B-B
(Removal)

MODEL: Floor Drains
FILE NAME: S:\PROJECTS\2020\1155D20_IDOT\08\DESIGN\CAD_SHEETS\WO 11\08201779\08201779-D876R99-007-IRepairDtl.dgn
11/13/2024 1:38:08 PM

WILLETT HOFMANN & ASSOCIATES INC
ENGINEERING ARCHITECTURE LAND SURVEYING
809 EAST 2ND STREET, DIXON, IL 61021-0367
T: 815-284-3381 DESIGN FIRM: #184-000918

USER NAME =		DESIGNED -	SM	REVISED -	
		CHECKED -	DCB	REVISED -	
PLOT SCALE =		DRAWN -	FDL	REVISED -	
PLOT DATE =		CHECKED -	DCB	REVISED -	

STATE OF ILLINOIS
DEPARTMENT OF TRANSPORTATION

JOINT REPLACEMENT DETAILS
STRUCTURE NO. 082-0179
STRUCTURAL SHEET 7 OF 12 SHEETS

F.A.I. RTE.	SECTION	COUNTY	TOTAL SHEETS	SHEET NO.
64	82-(4,5,6,7)-1RS-2	ST. CLAIR	388	379
WHA# 1155D20		CONTRACT NO. 76R99		
ILLINOIS	FED. AID PROJECT			

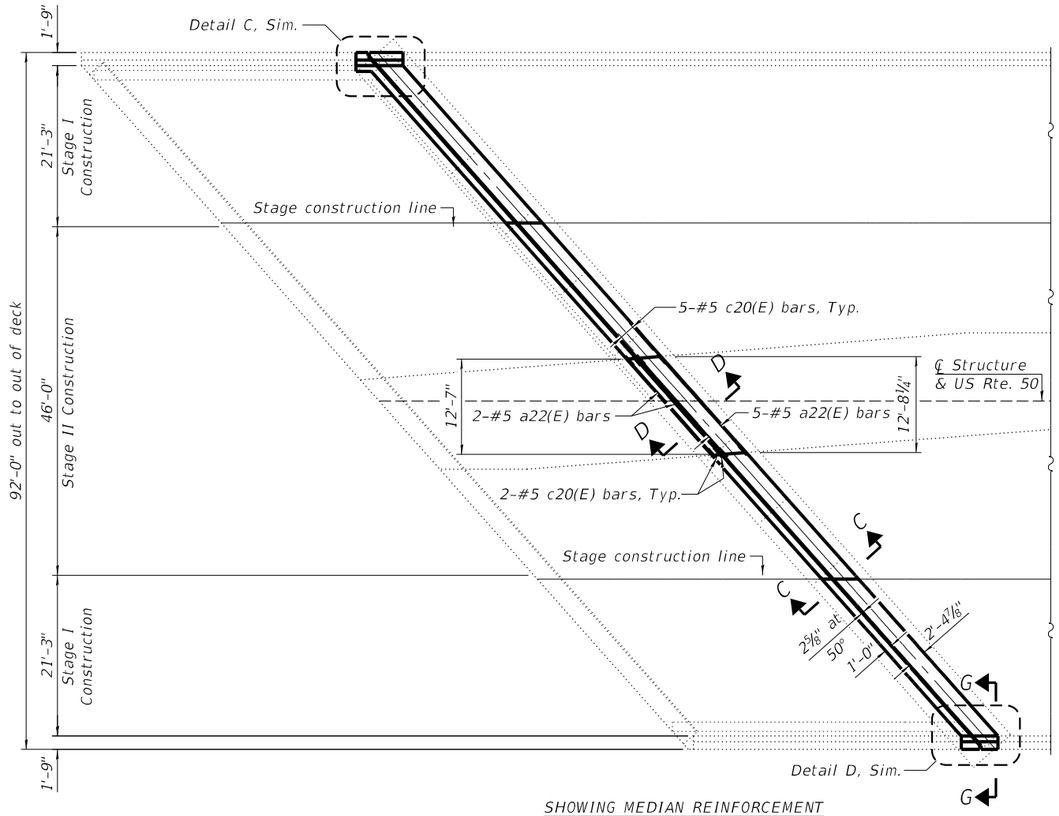

SHOWING MEDIAN REINFORCEMENT

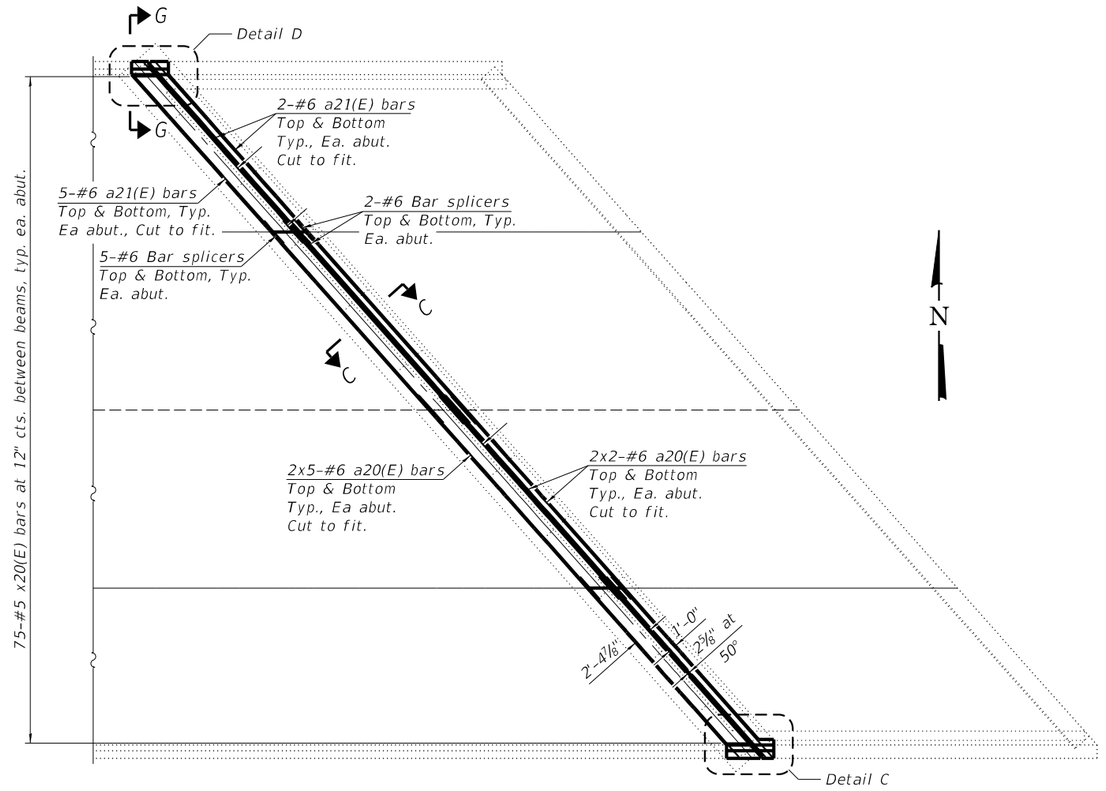

SHOWING DECK REINFORCEMENT

REPLACEMENT PARTIAL PLAN VIEW

(Replacement)
(Parapet reinforcement not shown for clarity)

MINIMUM BAR LAP

#5 bar = 3'-6"
#6 bar = 4'-10"

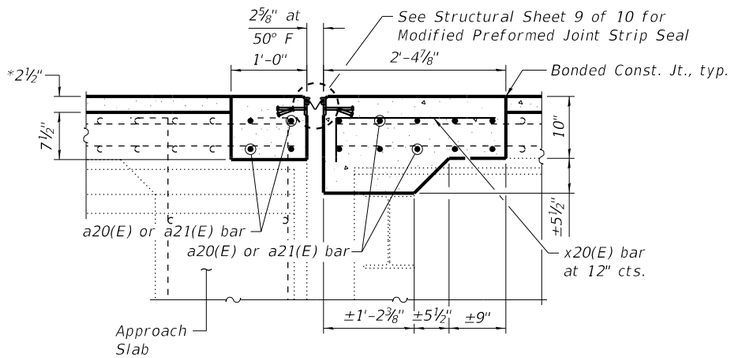

SECTION C-C

(Replacement)

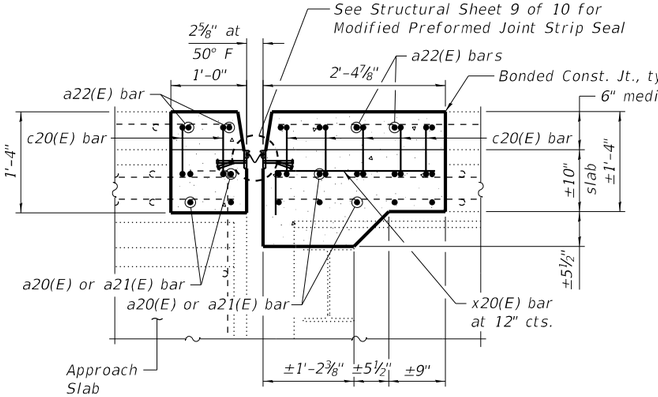

SECTION D-D

(Replacement)

NOTE:

See structural sheet 8 of 10 for Details C and D.
*After ¼" Diamond Griding (Bridge Section)

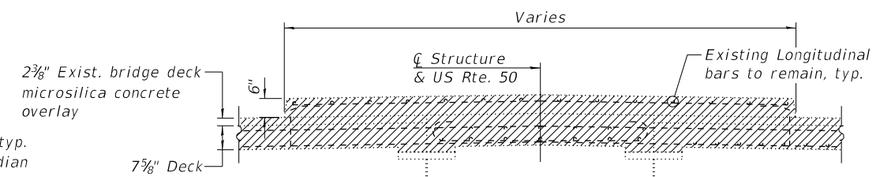

SECTION THRU MEDIAN AT JOINT

(Showing Removal - Looking East)
(Showing Median at Deck only, Approach similar)

LEGEND:

Concrete Removal

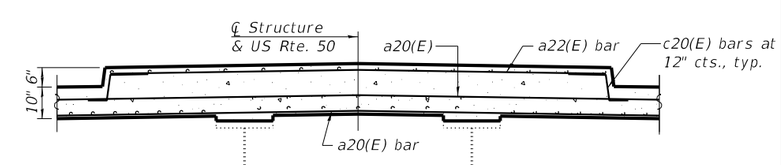

SECTION THRU MEDIAN AT JOINT

(Showing Proposed - Looking East)
(Showing Median at Deck only, Approach similar)

(Sheet 2 of 3)

MODEL: Floor Drains
FILE NAME: S:\PROJECTS\2020\1155D20_IDOTD8\DESIGN\CAD_SHEETS\WO 11\0820179\0820179-D876R99-008-JtRepairDtl.dgn

WILLETT HOFMANN & ASSOCIATES INC ENGINEERING ARCHITECTURE LAND SURVEYING 809 EAST 2ND STREET, DIXON, IL 61021-0367 T: 815-284-3381 DESIGN FIRM: #184-000918	USER NAME =	DESIGNED - SM	REVISED -	STATE OF ILLINOIS DEPARTMENT OF TRANSPORTATION	JOINT REPLACEMENT DETAILS STRUCTURE NO. 082-0179
		CHECKED - DCB	REVISED -		
	PLOT SCALE =	DRAWN - FDL	REVISED -		
	PLOT DATE =	CHECKED - DCB	REVISED -		STRUCTURAL SHEET 8 OF 12 SHEETS

F.A.I. RTE.	SECTION	COUNTY	TOTAL SHEETS	SHEET NO.
64	82-(4,5,6,7)-1RS-2	ST. CLAIR	388	380
	WHA# 1155D20	CONTRACT NO. 76R99		
		ILLINOIS	FED. AID PROJECT	

11/13/2024 1:38:09 PM

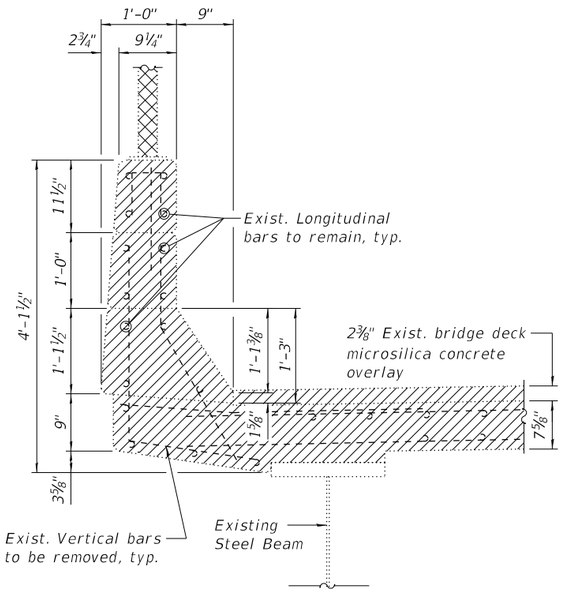

SECTION E-E
(Removal)

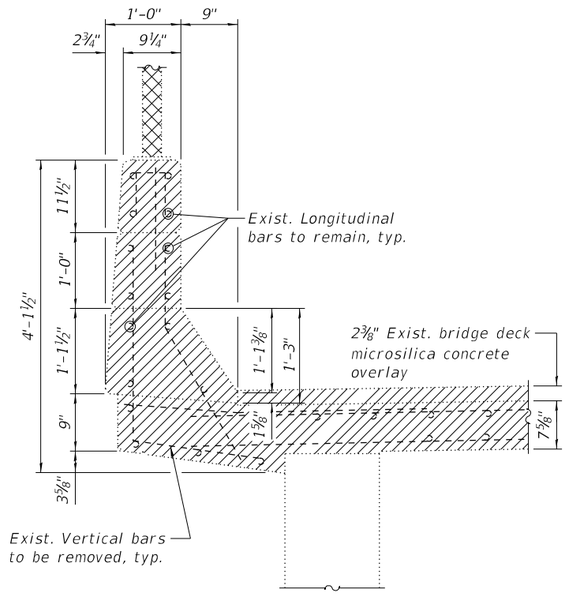

SECTION F-F
(Removal)

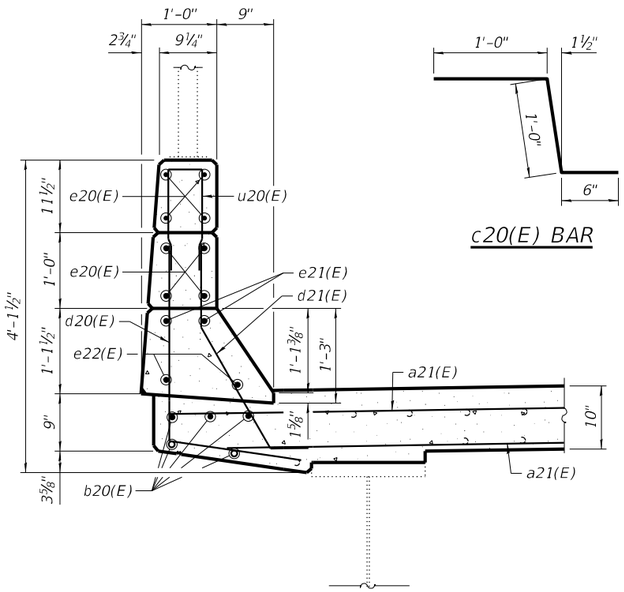

SECTION G-G
(Replacement)

c20(E) BAR

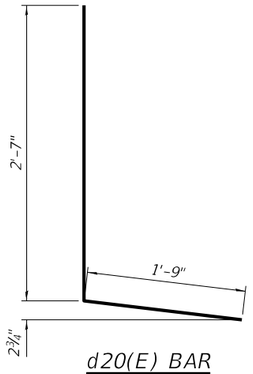

d20(E) BAR

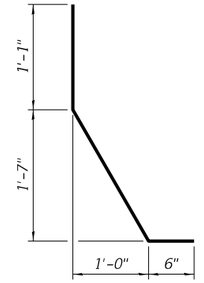

d21(E) BAR

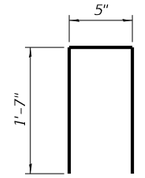

BAR u20(E)

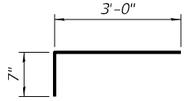

x20(E) BAR

LEGEND

Railing removal at joints only. Paid for as Removing and Re-Erecting Existing Railing.

Concrete Removal

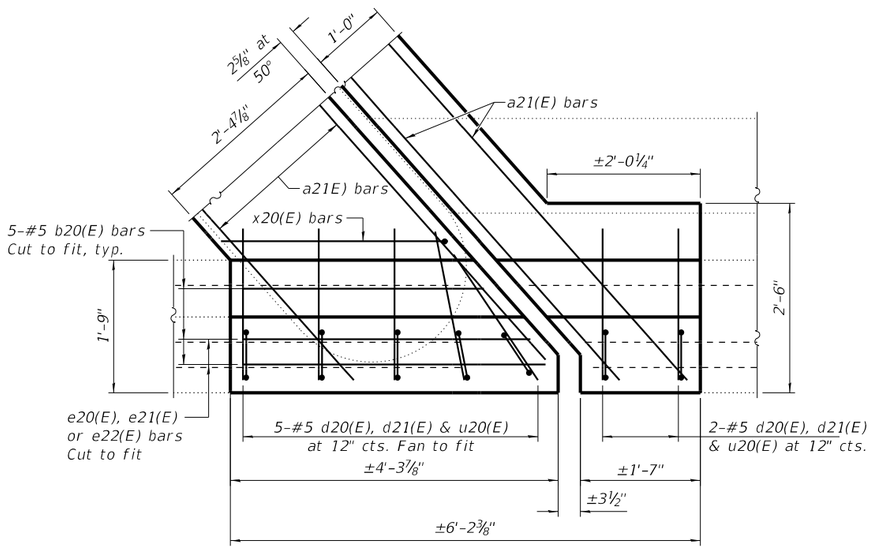

DETAIL C

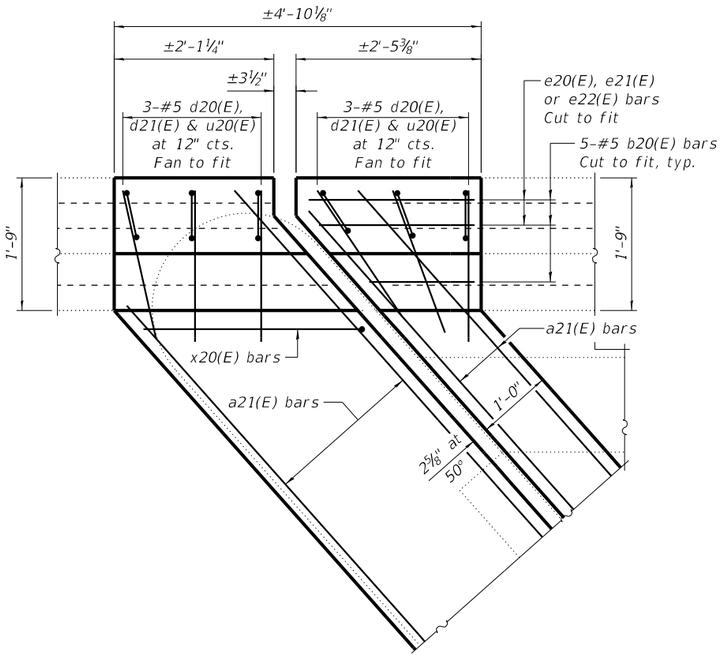

DETAIL D

BILL OF MATERIAL

Bar	No.	Size	Length	Shape
a20(E)	56	#6	33'-8"	
a21(E)	56	#6	29'-4"	
a22(E)	7	#6	16'-4"	
b20(E)	20	#5	4'-0"	
c20(E)	14	#5	2'-6"	
d20(E)	26	#5	4'-4"	
d21(E)	26	#5	3'-6"	
e20(E)	32	#4	4'-0"	
e21(E)	8	#8	4'-0"	
e22(E)	8	#5	4'-0"	
u20(E)	26	#5	3'-7"	
x20(E)	150	#5	3'-7"	
Concrete Removal			Cu. Yd.	36.2
Concrete Superstructure			Cu. Yd.	35.1
Reinforcement Bars, Epoxy Coated			Pound	6,670
Bar Splicers			Each	56
Removing And Re-Erecting Existing Railing			Foot	80

NOTES:

All exposed concrete edges to have ¾" chamfers.

Dimensions are based on a Rolled Rail Strip Seal Joint. If the Contractor elects to use the Welded Rail Strip Seal Joint, deck dimensions may require adjustments to satisfy the details on Modified Preformed Joint Strip Seal Sheet.

See Sheet 53 of 53 for Bar Splicer Details

WILLETT HOFMANN & ASSOCIATES INC
ENGINEERING ARCHITECTURE LAND SURVEYING
809 EAST 2ND STREET, DIXON, IL 61021-0367
T: 815-284-3381 DESIGN FIRM: #184-000918

USER NAME =	DESIGNED - SM	REVISED -	
	CHECKED - DCB	REVISED -	
PLOT SCALE =	DRAWN - FDL	REVISED -	
PLOT DATE =	CHECKED - DCB	REVISED -	

STATE OF ILLINOIS
DEPARTMENT OF TRANSPORTATION

JOINT REPLACEMENT DETAILS
STRUCTURE NO. 082-0179
STRUCTURAL SHEET 9 OF 12 SHEETS

F.A.I. RTE.	SECTION	COUNTY	TOTAL SHEETS	SHEET NO.
64	82-(4,5,6,7)-1RS-2	ST. CLAIR	388	381
	WHA# 1155D20	CONTRACT NO. 76R99		
	ILLINOIS FED. AID PROJECT			

MODEL: Floor Drains
FILE NAME: S:\PROJECTS\2020\1155D20_IDOT\D8\DESIGN\CAD_SHEETS\WO 11\08201179\08201179-D876R99-009-IRepairDtl.dgn
11/13/2024 1:38:09 PM

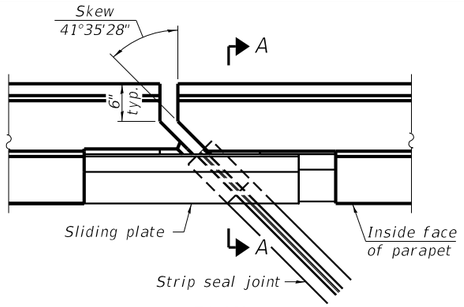

PLAN

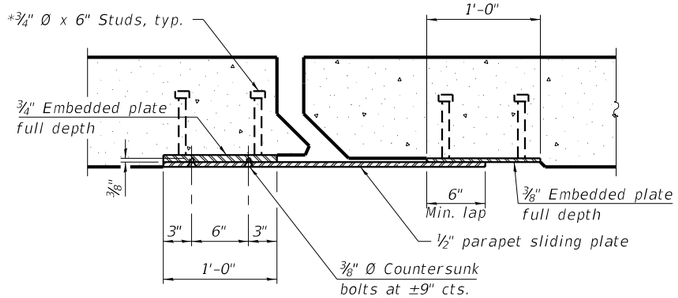

SECTION B-B

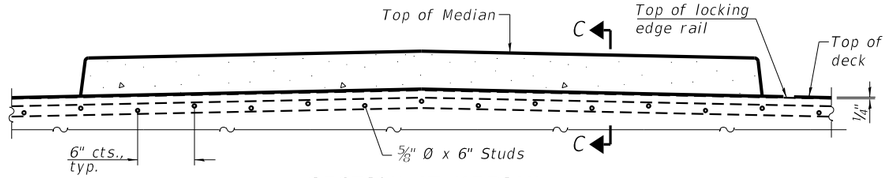

SECTION AT MEDIAN

Chamfer acute corners 2"

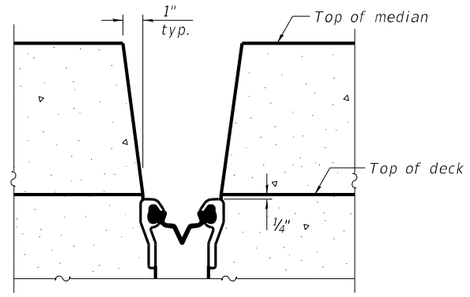

SECTION C-C

(at Rt. ℄'s)

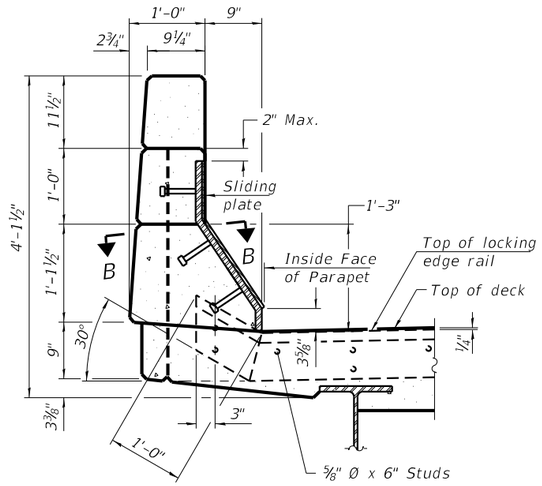

SECTION A-A

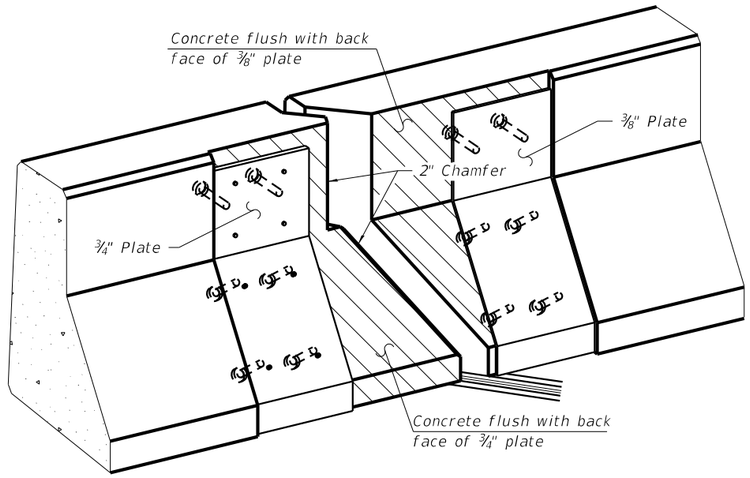

TRIMETRIC VIEW

(Showing back plates only)

(Extra parapet portion not shown for clarity)

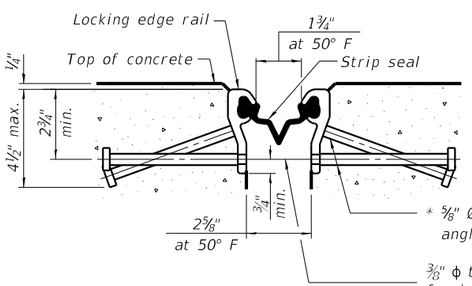

SHOWING ROLLED RAIL JOINT

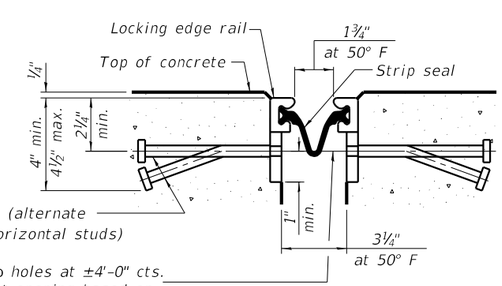

SHOWING WELDED RAIL JOINT

* ⅝" Ø x 6" studs @ 6" cts. (alternate angled/bent studs with horizontal studs)

⅜" ϕ threaded rods in 7/16" ϕ holes at ±4'-0" cts. for holding the proper joint opening based on the temperature during the deck pour. Place to miss studs. All rods shall be burned, or sawed off flush with the plates after concrete is set.

SECTION A-A

* Granular or solid flux filled headed studs conforming to Article 1006.32 of the Std. Specs., automatically end welded.

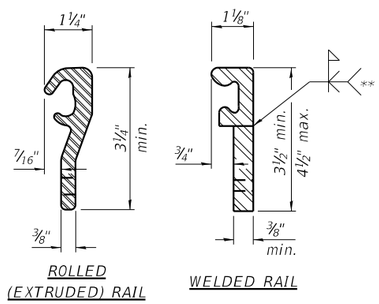

ROLLED (EXTRUDED) RAIL

WELDED RAIL

LOCKING EDGE RAILS

** Back gouge not required if complete joint penetration is verified by mock-up.

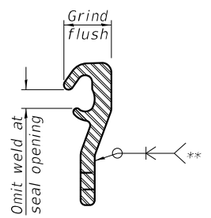

LOCKING EDGE RAIL SPLICE

The inside of the locking edge rail groove shall be free of weld residue. Rolled rail shown, welded rail similar.

Notes:

The strip seal shall be made continuous and shall have a minimum thickness of ¼". The configuration of the strip seal shall match the configuration of the locking edge rails. Open or "webbed" strip seal gland configurations are not permitted. The gland shall be sized for a maximum rated movement of 4 inches.

The locking edge rails depicted are configured for typical applications and are conceptual only. The actual configuration of the locking edge rails and matching strip seal may vary from manufacturer to manufacturer provided they fit the application and meet the minimum anchorage shown. Flanged edge rails, however, will not be allowed. Locking edge rails may exceed the 4½" maximum depth provided the anchorage system is revised according to the manufacturer's recommendation.

The manufacturer's recommended installation methods shall be followed.

All steel components shall be galvanized after fabrication according to Article 520.03 of the Standard Specifications.

The Maximum space between locking edge rail segments shall be 3/16" and sealed with a suitable sealant; however, any rail joint within 10' measured perpendicular to the face of the curb or parapet shall be welded as shown in the locking edge rail splice detail.

Cost of parapet sliding plates, embedded plates, and anchorage studs included with Preformed Joint Strip Seal.

The concrete opening below the strip seal will vary based on the locking edge rail chosen by the Contractor. Deck and parapet lengths shown elsewhere in the plans are dimensioned to the concrete opening, not the joint opening, and are based on the rolled locking edge rail. If the Contractor elects to use a different locking edge rail, dimensional adjustments may be required. One exception to this would be the strip seal joint at the end of the precast bridge approach slab. For these cases the pavement connector length shall be adjusted, not the length of the bridge approach slab.

BILL OF MATERIAL

Item	Unit	Total
Preformed Joint Strip Seal	Foot	241

MODEL: Floor Drains
FILE NAME: S:\PROJECTS\2020\1155D20_IDOT\D\DESIGN\CAD_SHEETS\WO 11\08201790820179-D876R99-010-ModifiSeal.dgn

11/13/2024 1:38:10 PM

WILLETT HOFMANN & ASSOCIATES, INC.
ENGINEERING ARCHITECTURE LAND SURVEYING
809 EAST 2ND STREET, DIXON, IL 61021-0367
T: 815-284-3381 DESIGN FIRM: #184-000918

USER NAME =	DESIGNED - SM	REVISED -	
	CHECKED - DCB	REVISED -	
PLOT SCALE =	DRAWN - FDL	REVISED -	
PLOT DATE =	CHECKED - DCB	REVISED -	

STATE OF ILLINOIS
DEPARTMENT OF TRANSPORTATION

MODIFIED PREFORMED JOINT STRIP SEAL
STRUCTURE NO. 082-0179
STRUCTURAL SHEET 10 OF 12 SHEETS

F.A.I. RTE.	SECTION	COUNTY	TOTAL SHEETS	SHEET NO.
64	82-(4,5,6,7)-1RS-2	ST. CLAIR	388	382
	WHA# 1155D20	CONTRACT NO. 76R99		
	ILLINOIS FED. AID PROJECT			

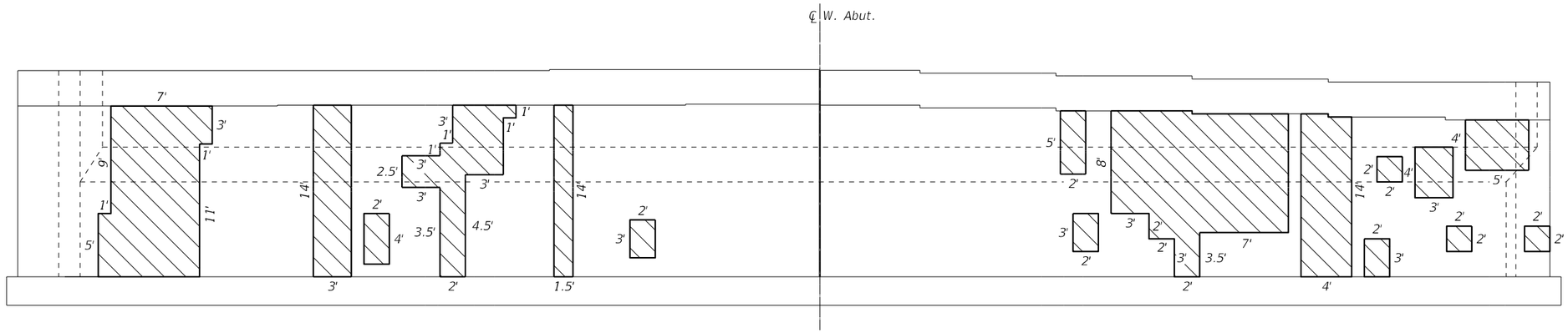

WEST ABUTMENT

(Looking West)

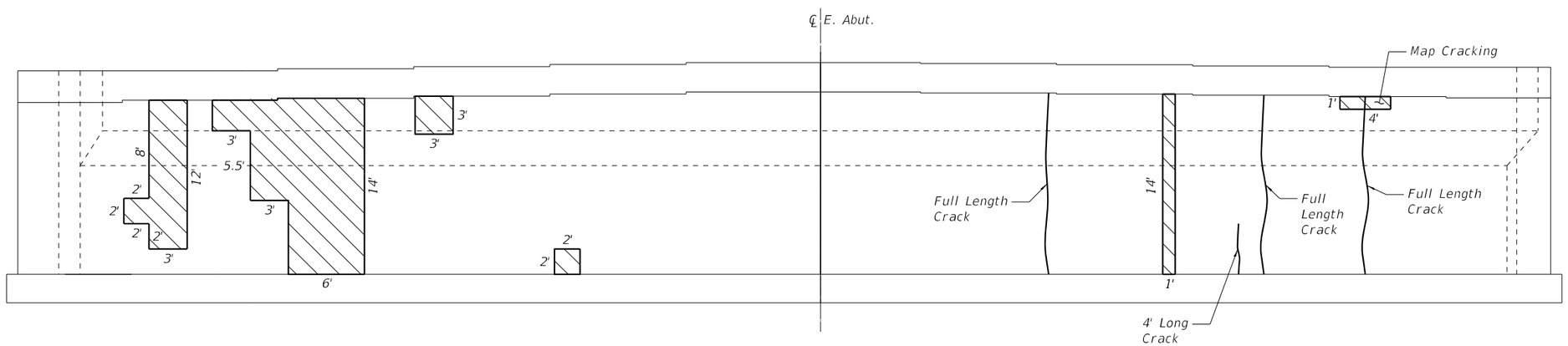

EAST ABUTMENT

(Looking East)

LEGEND

Structural Repair of Concrete (Depth Equal to or less than 5 Inches)

Structural Repair of Concrete (Depth Greater than 5 Inches)

NOTES:

The Engineer shall show actual patch locations on as-built plans.

Deck Survey 10-10-23.

The areas and locations of Structural Repair of Concrete (Depth Equal to or Less than 5") are estimated. The quantity in the Bill of Materials has been increased by 20%.

No areas of Structural Repair of Concrete (Depth Greater than 5") were noted during the abutment inspection. This pay item is a contingency based on 20% of the plan quantity area of Structural Repair of Concrete (Depth Equal to or Less than 5"). If required, the Engineer shall determine the limits of these pay items in the field.

All Concrete Removal Regions shall have a 3/4" sawcut around perimeter prior to Concrete Removal operations. Cost included in Structural Repair of Concrete (Depth Equal to or Less than 5") or in Structural Repair of Concrete (Depth Greater than 5").

BILL OF MATERIAL

ITEM	UNIT	TOTAL
Structural Repair of Concrete (Depth Equal to or Less than 5 inches)	Sq. Ft.	800
Structural Repair of Concrete (Depth Greater than 5 inches)	Sq. Ft.	160

MODEL: Abutment Repairs
FILE NAME: S:\PROJECTS\2020\1155D20_IDOTD8\DESIGN\CAD_SHEETS\WO 11\0820179\0820179-D876R99-011-AbutRepairs.dgn

WILLETT HOFMANN & ASSOCIATES INC
ENGINEERING ARCHITECTURE LAND SURVEYING
809 EAST 2ND STREET, DIXON, IL 61021-0367
T: 815-284-3381 DESIGN FIRM: #184-000918

USER NAME =	DESIGNED - RB	REVISED -	
	CHECKED - SAB	REVISED -	
PLOT SCALE =	DRAWN - RDA	REVISED -	
PLOT DATE =	CHECKED - SAB	REVISED -	

STATE OF ILLINOIS
DEPARTMENT OF TRANSPORTATION

ABUTMENT REPAIRS
STRUCTURE NO. 082-0179

STRUCTURAL SHEET 11 OF 12 SHEETS

F.A.I. RTE.	SECTION	COUNTY	TOTAL SHEETS	SHEET NO.
64	82-(4,5,6,7)-1RS-2	ST. CLAIR	388	383
	WHA# 1155D20	CONTRACT NO. 76R99		
		ILLINOIS	FED. AID PROJECT	

11/13/2024 1:38:10 PM

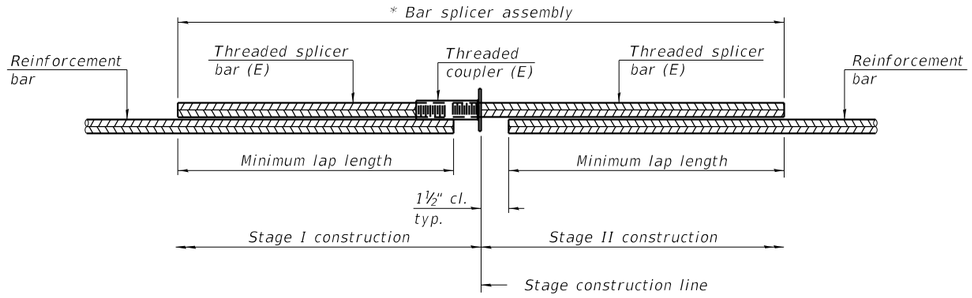

STANDARD BAR SPLICER ASSEMBLY PLAN

Only bar splicer assemblies as presented on the approved QPL list may be used.

Threaded splicer bar length = min. lap length + 1½" + thread length

** Epoxy not required on Bar Splicer Assembly components used in conjunction with black bars.*

Location	Bar size	No. assemblies required	Minimum lap length
Ex. Jt. Replace	#5	56	4'-10"

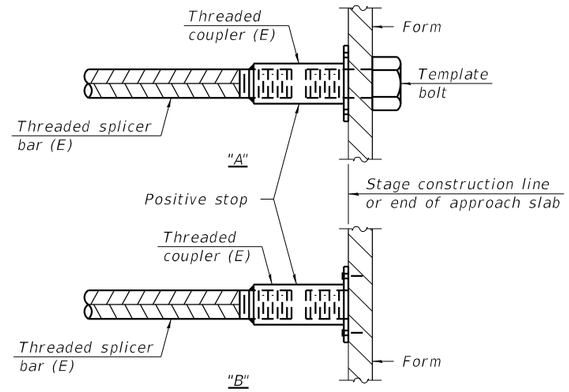

INSTALLATION AND SETTING METHODS

"A" : Set bar splicer assembly by means of a template bolt.
"B" : Set bar splicer assembly by nailing to wood forms or cementing to steel forms.
(E) : Indicates epoxy coating.

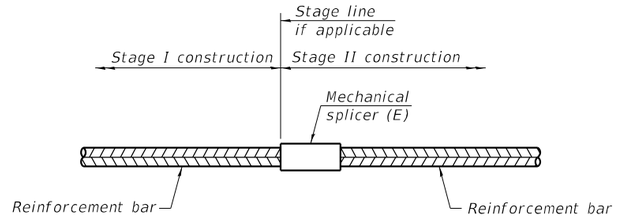

STANDARD MECHANICAL SPLICER

Location	Bar size	No. assemblies required

NOTES:

Splicer bars shall be deformed with threaded ends and have a minimum 60 ksi yield strength.

All reinforcement shall be lapped and tied to the splicer bars.

Bar splicer assemblies shall be epoxy coated according to the requirements for reinforcement bars. See Section 508 of the Standard Specifications.

See approved list of bar splicer assemblies and mechanical splicers for alternatives.

BSD-1 5-15-2023

WILLETT HOFMANN & ASSOCIATES INC
ENGINEERING ARCHITECTURE LAND SURVEYING
809 EAST 2ND STREET, DIXON, IL 61021-0367
T: 815-284-3381 DESIGN FIRM: #184-000918

USER NAME =	DESIGNED - SM	REVISED -	
	CHECKED - DCB	REVISED -	
PLOT SCALE =	DRAWN - FDL	REVISED -	
PLOT DATE =	CHECKED - DCB	REVISED -	

STATE OF ILLINOIS
DEPARTMENT OF TRANSPORTATION

BAR SPLICER ASSEMBLY AND MECHANICAL SPLICER DETAILS
STRUCTURE NO. 082-0179
STRUCTURAL SHEET 12 OF 12 SHEETS

F.A.I. RTE.	SECTION	COUNTY	TOTAL SHEETS	SHEET NO.
64	82-(4,5,6,7)-1RS-2	ST. CLAIR	388	384
	WHA# 1155D20	CONTRACT NO. 76R99		
	ILLINOIS FED. AID PROJECT			

MODEL: Bar Splicer Assembly and Mechanical Splicer Details
FILE NAME: S:\PROJECTS\2020\1155D20_IDOT\D8\DESIGN\CAD_SHEETS\WO 11\08201179\08201179-D876R99-012-Bar Splicer Assembly and Mechanical Splicer Details.dgn
11/13/2024 1:38:11 PM

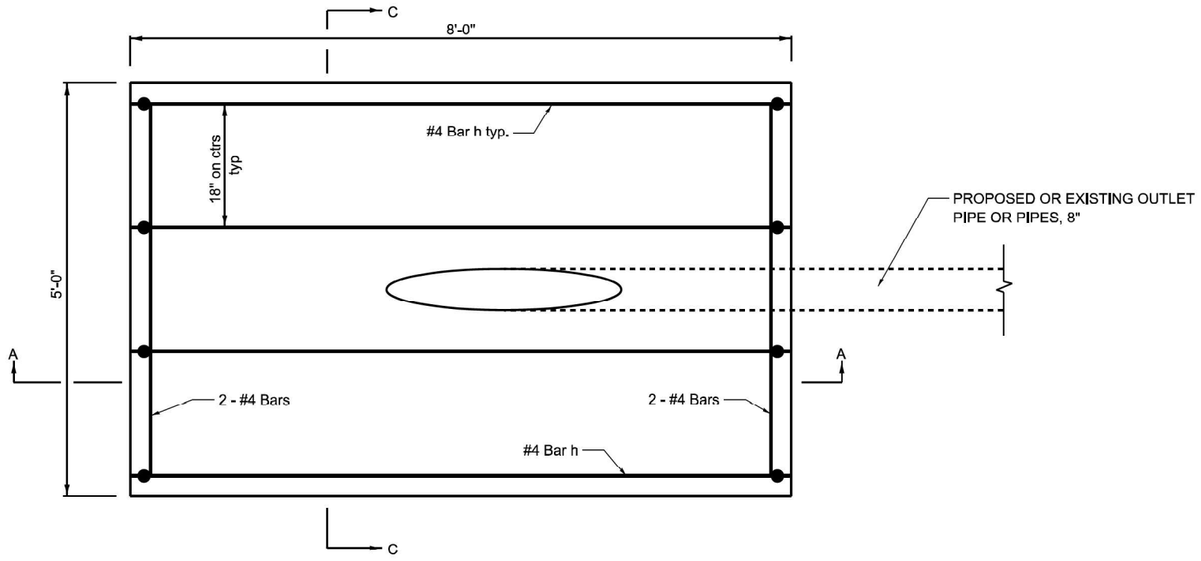

PLAN VIEW

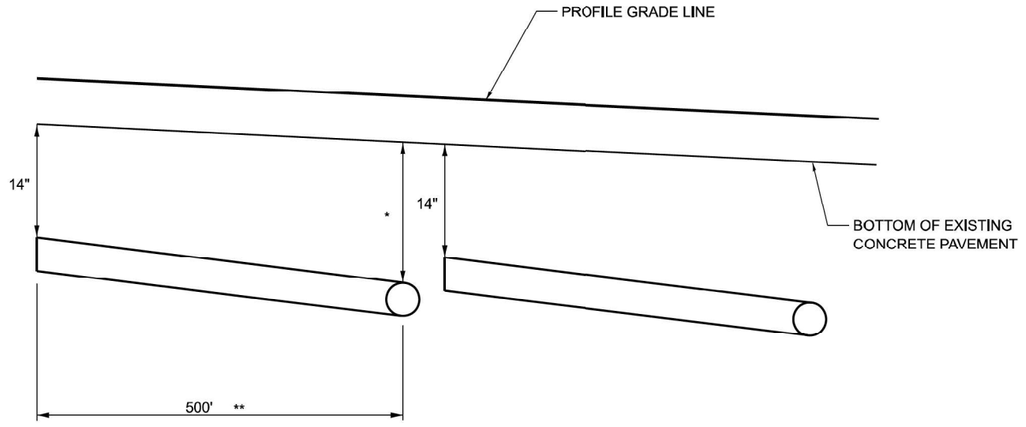

* DEPTH OF OUTLET DETERMINED BY SLOPE
** UNLESS OTHERWISE NOTED IN THE PLANS

PIPE UNDERDRAIN DETAIL
(USE WHEN PGL IS LESS THAN 0.4%)

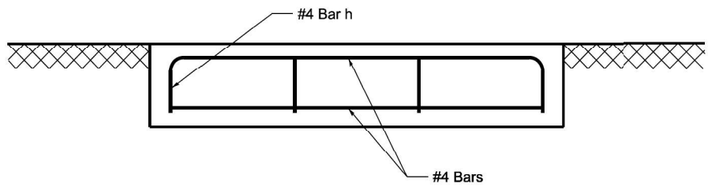

SECTION C-C

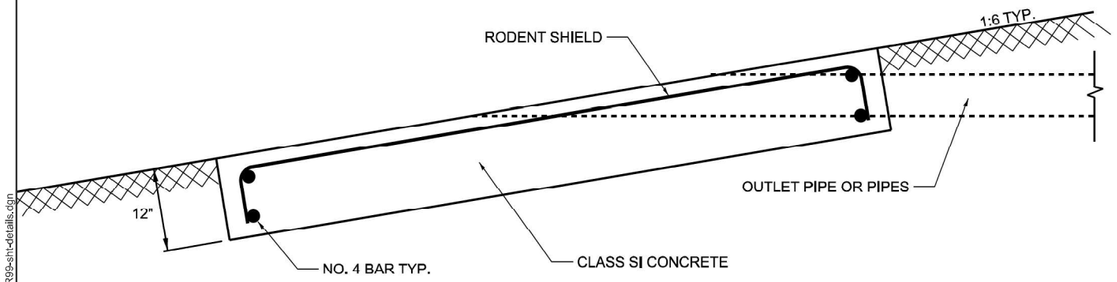

SECTION A-A

APPROXIMATE OUTLET PROTECTOR QUANTITIES FOR EACH OUTLET PROTECTOR	
CONCRETE, CLASS SI	1.5 CU YD
REINFORCING STEEL	35.6 LB

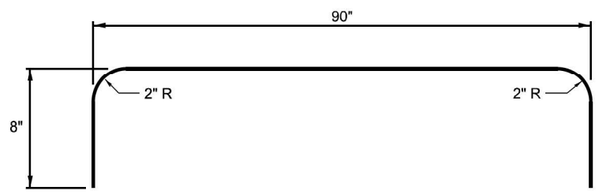

#4 h Bar

NOTES

SEE STANDARD 601101 FOR DETAILS OF RODENT SHEILDS.

THE OUTLET PIPE OR PIPES SHALL BE LOCATED AS CLOSE AS POSSIBLE TO THE CENTER OF THE OUTLET PROTECTOR.

THE LAST 10 FEET OF OUTLET PIPE SHALL BE SCHEDULE 40 PVC.

REINFORCEMENT BARS MAY BE CUT OR RELOCATED TO ACCOMODATE PIPE.

CUT OUTLET PIPE ON A BEVE TO MATCH FINISHED SURFACE OF SURROUNDING PCC.

SEEDING CLASS 2 SHALL BE CONSIDERED INCLUDED IN THE COST OF THE PAY ITEMS.

MODEL: Concrete Pipeunderdrain Headwall [Sheet]
FILE NAME: S:\PROJECTS\2021\1061D21_IDOTD8\DESIGN\CAD_SHEETS\WO 5\D876R99-sht-details.dgn

WILLETT HOFMANN & ASSOCIATES INC
ENGINEERING · ARCHITECTURE · LAND SURVEYING
809 EAST 2ND ST. SUITE 1, DIXON, IL 61021-0367
(815) 284-3387 · FAX (815) 284-3399 · FIRM: 4184-000518

USER NAME = greg	DESIGNED -	REVISED -	
	DRAWN -	REVISED -	
	CHECKED -	REVISED -	
PLOT DATE = 11/21/2024	DATE -	REVISED -	

STATE OF ILLINOIS
DEPARTMENT OF TRANSPORTATION

DISTRICT DETAILS
CONCRETE HEADWALL FOR PIPE UNDERDRAINS

SCALE: | SHEET 1 OF 1 SHEETS | STA. | TO STA.

F.A.I RTE.	SECTION	COUNTY	TOTAL SHEETS	SHEET NO.
64	82-(4,5,6,7)-1RS-2	ST. CLAIR	388	385
		CONTRACT NO. 76R99		
		ILLINOIS	FED. AID PROJECT	

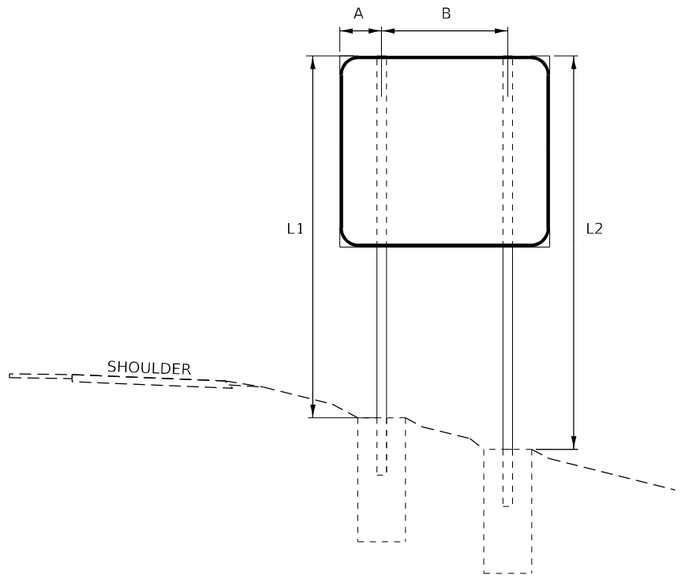

2–SUPPORT STRUCTURE

MODEL: Sheet-1
FILE NAME: pw://cdmsmith-eu02-pw.bentley.com:pw_01/Documents/338073/292457/10 Transportation/02 Engineering Services/01 Roadway/10 BIM_CADD/01 Working/Sheets/76R99-sht-details_mounting.dgn

CDM Smith

USER NAME = PELLOTCA	DESIGNED - CAP	REVISED -	STATE OF ILLINOIS DEPARTMENT OF TRANSPORTATION	MOUNTING HEIGHT DETAILS	
	DRAWN - CAP	REVISED -			
PLOT SCALE = 0.16666633 ' / in.	CHECKED - AAC	REVISED -			
PLOT DATE = 11/13/2024	DATE - 09/09/2024	REVISED -		SCALE: NONE | SHEET 386 OF 388 SHEETS | STA. TO STA.	

F.A.I. RTE.	SECTION	COUNTY	TOTAL SHEETS	SHEET NO.
64	82-(4,5,6,7)-1RS-2	ST. CLAIR	388	386
		CONTRACT NO. 76R99		
	ILLINOIS FED. AID PROJECT			

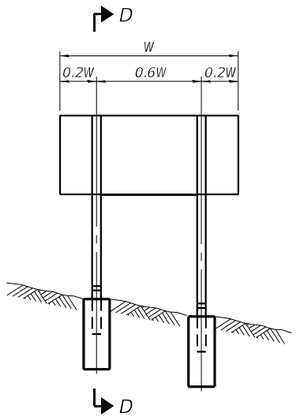

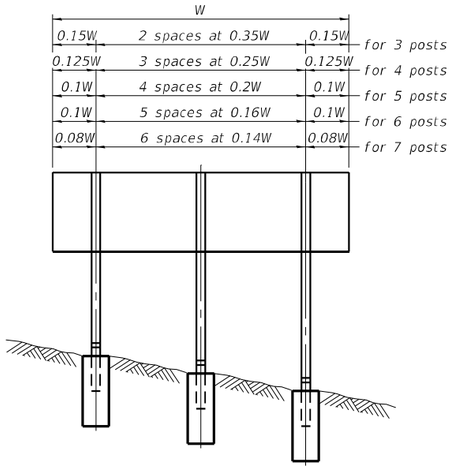

ELEVATION

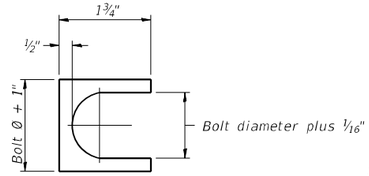

SHIM DETAIL

Furnish two 0.01" thick and two 0.03" thick stainless steel or brass (ASTM B36) shims per post.

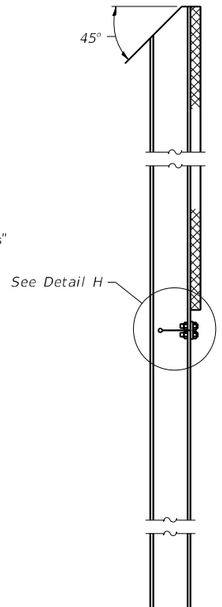

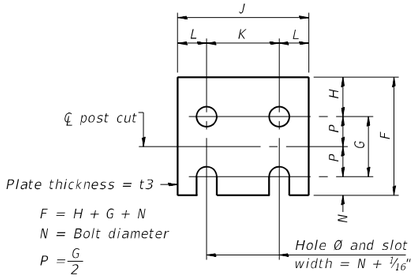

FUSE PLATE DATA		
N = Bolt Diameter	G	H
½"	2"	1⅛"
⅝"	2¼"	1¼"
¾"	2½"	1⅜"
⅞"	2¾"	1½"
1"	3"	1⅝"
1⅛"	3¼"	1¾"
1¼"	3½"	1⅞"

FUSE PLATE DETAIL

(Install with notches down.)

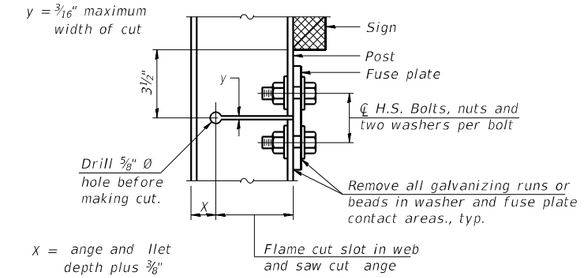

DETAIL H

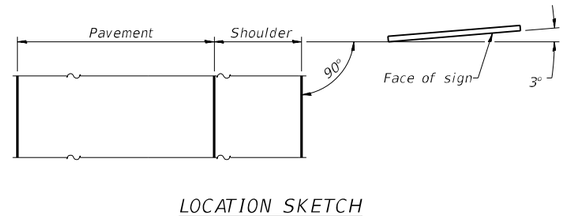

LOCATION SKETCH

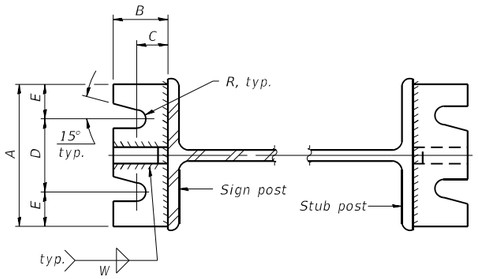

SECTION A-A

SECTION B-B

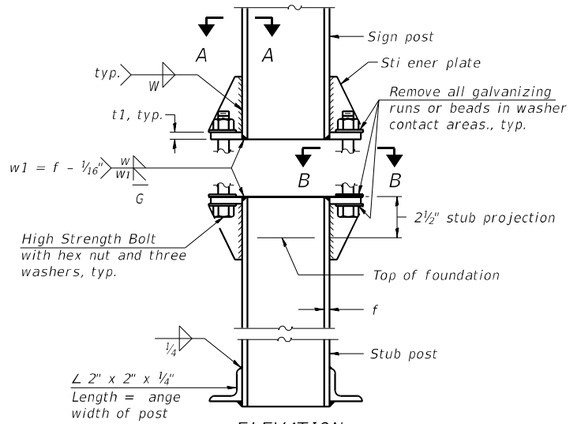

ELEVATION
SIGN POST & STUB POST

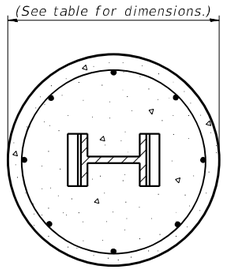

SECTION C-C

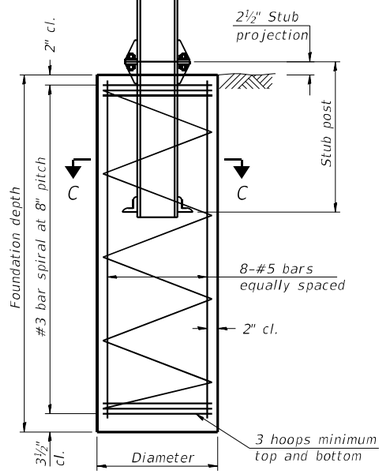

SECTION D-D

STIFFENER PLATE DETAIL

Diameter

GENERAL NOTES

Posts shall be plumbed by using shims with post-to-stub post connection bolts snug tight only. Final tightening of all High Strength Bolts shall be in accordance with Article 727.05 and threads at the junction of the bolt and nut shall be burred or center punched to prevent the nut from loosening.

LOADING: 80 m.p.h. wind with 30% gust factor, normal to sign.

DESIGN STRESSES:
Structural steel - 20,000 p.s.i.
Reinforcing steel - 20,000 p.s.i.
Concrete - 1,400 p.s.i.
Footing soil pressure - 2,000 p.s.f.

After fabrication, the post, fuse plate and upper 6", min. of the stub post shall be hot-dip galvanized in accordance with AASHTO M111. All bolts, nuts and washers shall be hot-dip galvanized in accordance with AASHTO M232.

Work this sheet with Base Sheet BAW-A-2.

BAW-A-1 2-17-2017

MODEL: BAW_1
FILE NAME: pw://cdmsmith-eu02-pw.bentley.com:pw_d11/Documents/338073/2924577/10 Transportation/02 Engineering Services/01 Roadway/10 BIM_CADD/01 Working/Sheets/76R99-bm-details_mounting.dgn

CDM Smith

USER NAME = PELLOTCA	DESIGNED - CAP	REVISED -	
	DRAWN - CAP	REVISED -	
PLOT SCALE = 0.16666633 ' / in.	CHECKED - AAC	REVISED -	
PLOT DATE = 11/13/2024	DATE - 09/09/2024	REVISED -	

STATE OF ILLINOIS
DEPARTMENT OF TRANSPORTATION

BREAK-AWAY WIDE FLANGE STEEL SIGN POST DETAILS

SCALE: NONE | SHEET n/a OF 388 SHEETS | STA. | TO STA.

F.A.I. RTE.	SECTION	COUNTY	TOTAL SHEETS	SHEET NO.
64	82-(4,5,6,7)-1RS-2	ST. CLAIR	388	n/a
		CONTRACT NO. 76R99		
	ILLINOIS FED. AID PROJECT			

POST	CONCRETE FOUNDATION TABLE							POST TO STUB POST CONNECTION DATA									FUSE PLATE DATA			
	Foundation			Reinforcement																
	Diameter	*Minimum Depth	Concrete (1) cu. yds.)	Vertical Bars Length	Bar Spirals Diameter	Bar Spirals Length	lbs. (2)	Stub Post Length	Bolt Size	A	B	C	D	E	t1	t2	R	W	J	K	L	t3
W6x9	2'-0"	6'-0"	0.70	5'-9"	1'-8½"	79'-0"	78	2'-3"	⅝" x 3¼"	6"	2¼"	1¼"	3½"	1¼"	¾"	½"	11/32"	¼"	4"	2¼"	⅞"	¼"
W6x15	2'-0"	6'-0"	0.70	5'-9"	1'-8½"	79'-0"	78	2'-6"	⅝" x 3¼"	6"	2¼"	1¼"	3½"	1¼"	¾"	½"	11/32"	¼"	6"	3½"	1¼"	⅜"
W8x18	2'-0"	6'-0"	0.70	5'-9"	1'-8½"	79'-0"	78	2'-6"	¾" x 3¾"	6"	2½"	1⅜"	3¼"	1⅜"	1"	½"	13/32"	5/16"	5¼"	2¾"	1¼"	⅜"
W10x22	2'-6"	6'-6"	1.18	6'-3"	2'-2½"	105'-0"	92	3'-0"	¾" x 3¾"	6"	2½"	1⅜"	3¼"	1⅜"	1"	½"	13/32"	5/16"	5¾"	2¾"	1½"	½"
W10x26	2'-6"	7'-0"	1.27	6'-9"	2'-2½"	112'-0"	98	3'-0"	⅞" x 4"	7"	2¾"	1½"	4"	1½"	1"	¾"	15/32"	⅜"	5¾"	2¾"	1½"	⅝"
W12x26	2'-6"	7'-9"	1.41	7'-6"	2'-2½"	119'-0"	107	3'-0"	⅞" x 4"	7"	2¾"	1½"	4"	1½"	1"	¾"	15/32"	⅜"	6½"	3½"	1½"	⅝"
W14x30	3'-0"	7'-3"	1.90	7'-0"	2'-8½"	145'-0"	113	3'-0"	⅞" x 4"	7"	2¾"	1½"	4"	1½"	1"	¾"	15/32"	⅜"	6¾"	3½"	1⅝"	½"
W14x38	3'-0"	8'-0"	2.09	7'-9"	2'-8½"	153'-0"	122	3'-6"	1" x 4½"	7½"	3"	1¾"	4"	1¾"	1¼"	¾"	17/32"	⅜"	6¾"	3½"	1⅝"	½"
W16x45	3'-0"	8'-6"	2.23	8'-3"	2'-8½"	162'-0"	130	3'-6"	1" x 4½"	7½"	3"	1¾"	4"	1¾"	1¼"	¾"	17/32"	⅜"	7"	3½"	1¾"	½"

*Dimensional changes required for varying site conditions shall be approved by the Engineer.

POST	FUSE PLATE BOLT SIZE — Sign Height																			
	4'-0"	5'-0"	6'-0"	7'-0"	8'-0"	9'-0"	10'-0"	11'-0"	12'-0"	13'-0"	14'-0"	15'-0"	16'-0"	17'-0"	18'-0"	19'-0"	20'-0"	21'-0"	22'-0"	23'-0"	24'-0"
W6x9	½" x 1½"	½" x 1½"	½" x 1½"	½" x 1½"	——	——	——	——	——	——	——	——	——	——	——	——	——	——	——	——	——
W6x15	½" x 1¾"	½" x 1¾"	½" x 1¾"	⅝" x 2"	⅝" x 2"	¾" x 2"	¾" x 2"	¾" x 2"	¾" x 2"	——	——	——	——	——	——	——	——	——	——	——	——
W8x18	½" x 1¾"	½" x 1¾"	½" x 1¾"	½" x 1¾"	⅝" x 2"	⅝" x 2"	¾" x 2"	¾" x 2"	¾" x 2"	¾" x 2"	——	——	——	——	——	——	——	——	——	——	——
W10x22	½" x 2"	½" x 2"	½" x 2"	½" x 2"	½" x 2"	⅝" x 2"	⅝" x 2"	¾" x 2¼"	¾" x 2¼"	¾" x 2¼"	¾" x 2¼"	¾" x 2¼"	¾" x 2¼"	——	——	——	——	——	——	——	——
W10x26	½" x 2"	½" x 2"	½" x 2"	½" x 2"	½" x 2"	⅝" x 2¼"	⅝" x 2¼"	¾" x 2½"	¾" x 2½"	¾" x 2½"	¾" x 2½"	¾" x 2½"	¾" x 2½"	¾" x 2½"	——	——	——	——	——	——	——
W12x26	½" x 2"	½" x 2"	½" x 2"	½" x 2"	½" x 2"	⅝" x 2¼"	⅜" x 2½"	¾" x 2½"	¾" x 2½"	¾" x 2½"	¾" x 2½"	¾" x 2½"	¾" x 2½"	¾" x 2½"	¾" x 2½"	——	——	——	——	——	——
W14x30	½" x 2"	½" x 2"	½" x 2"	½" x 2"	½" x 2"	⅝" x 2"	⅝" x 2"	¾" x 2¼"	¾" x 2¼"	¾" x 2¼"	¾" x 2¼"	¾" x 2¼"	¾" x 2¼"	¾" x 2¼"	¾" x 2¼"	¾" x 2¼"	¾" x 2¼"	——	——	——	——
W14x38	½" x 2"	½" x 2"	½" x 2"	½" x 2"	½" x 2"	⅝" x 2¼"	⅝" x 2¼"	¾" x 2½"	¾" x 2½"	¾" x 2½"	¾" x 2½"	¾" x 2½"	⅞" x 2½"	⅞" x 2½"	1" x 2¾"	1" x 2¾"	1" x 2¾"	1" x 2¾"	1" x 2¾"	1" x 2¾"	1" x 2¾"
W16x45	——	½" x 2"	½" x 2"	½" x 2"	½" x 2"	½" x 2"	½" x 2"	⅝" x 2¼"	⅝" x 2¼"	⅝" x 2¼"	¾" x 2½"	¾" x 2½"	⅞" x 2½"	⅞" x 2½"	1" x 2¾"	1" x 2¾"	1" x 2¾"	1" x 2¾"	1" x 2¾"	1" x 2¾"	1" x 2¾"

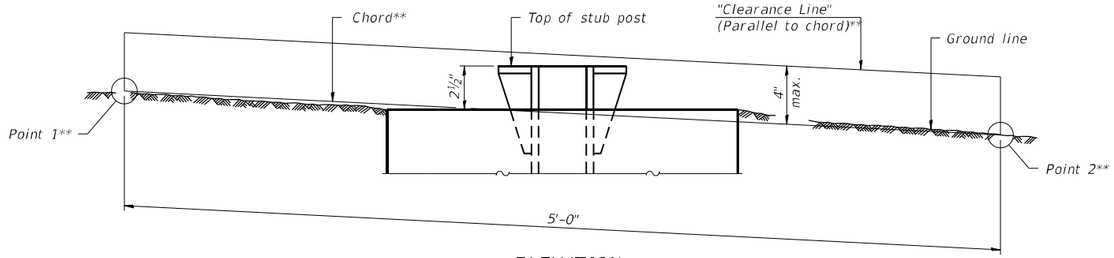

ELEVATION
GROUND LINE & STUB POST

** For all "Point 1" and "Point 2" locations, "Clearance Line" must be at or above top of stub post.

(1) Quantity includes all concrete necessary for one foundation.

(2) Includes reinforcement bars and spiral hooping for one foundation.

BAW-A-2 2-17-2017

MODEL: BAW_2
FILE NAME: pw://cdmsmith-as02-ew.bentley.com:pw_p11/Documents/338073/2/92457/10 Transportation/02 Engineering Services/01 Roadway/10 BIM_CADD/01 Working/Sheets/76R99-sht-details_mounting.dgn

CDM Smith

USER NAME = PELLOTCA	DESIGNED - CAP	REVISED -	STATE OF ILLINOIS DEPARTMENT OF TRANSPORTATION	BREAK-AWAY WIDE FLANGE STEEL SIGN POST TABLES
	DRAWN - CAP	REVISED -		
PLOT SCALE = 0.16666633 ' / in.	CHECKED - AAC	REVISED -		
PLOT DATE = 11/13/2024	DATE - 09/09/2024	REVISED -		SCALE: NONE SHEET n/a OF 388 SHEETS STA. TO STA.

F.A.I. RTE.	SECTION	COUNTY	TOTAL SHEETS	SHEET NO.
64	82-(4,5,6,7)-1RS-2	ST. CLAIR	388	n/a
		CONTRACT NO. 76R99		
	ILLINOIS FED. AID PROJECT			