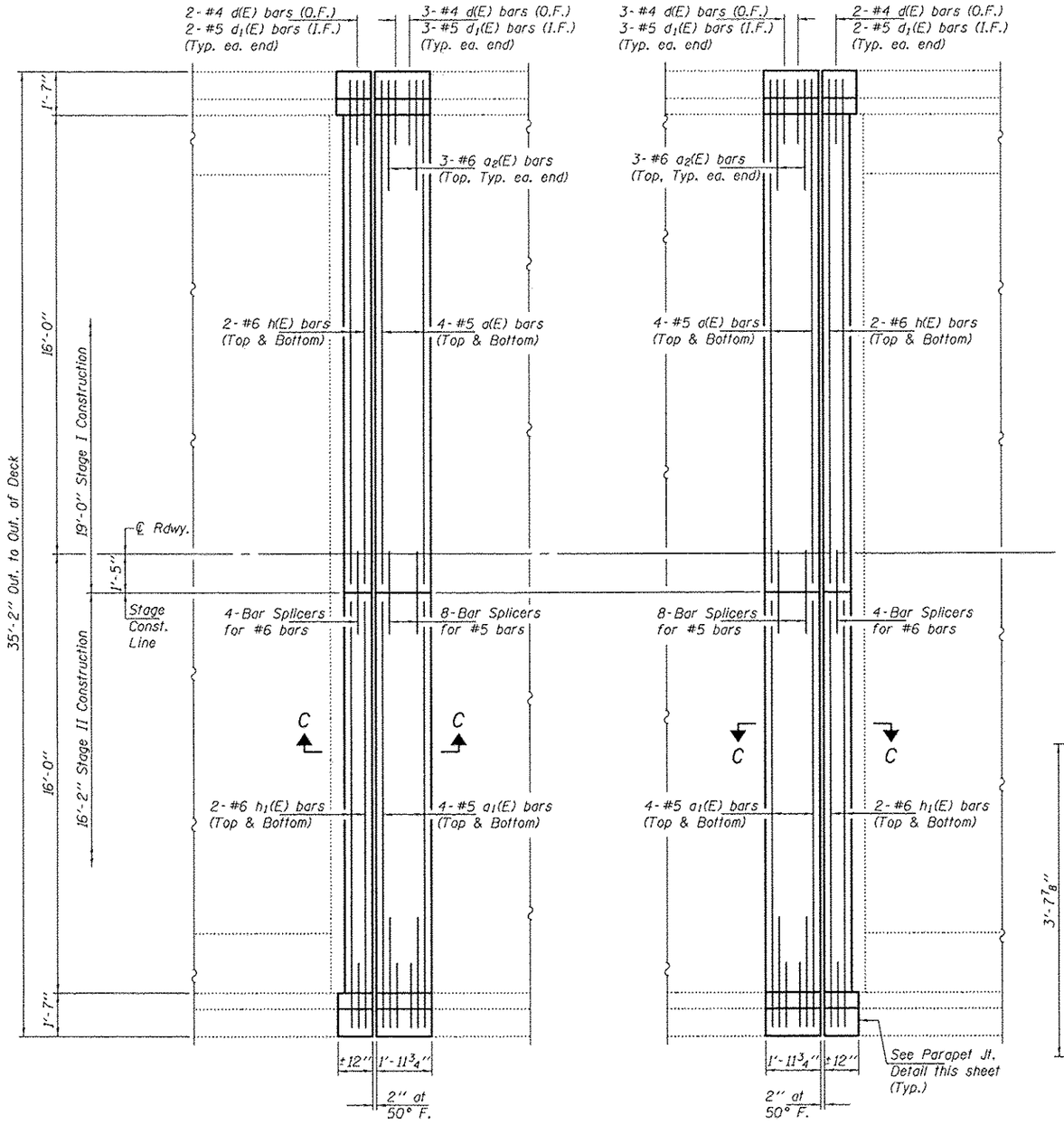

CONCRETE PLAN

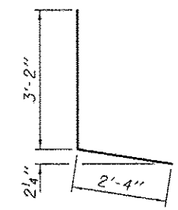

BAR d(E)

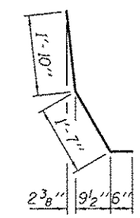

BAR d1(E)

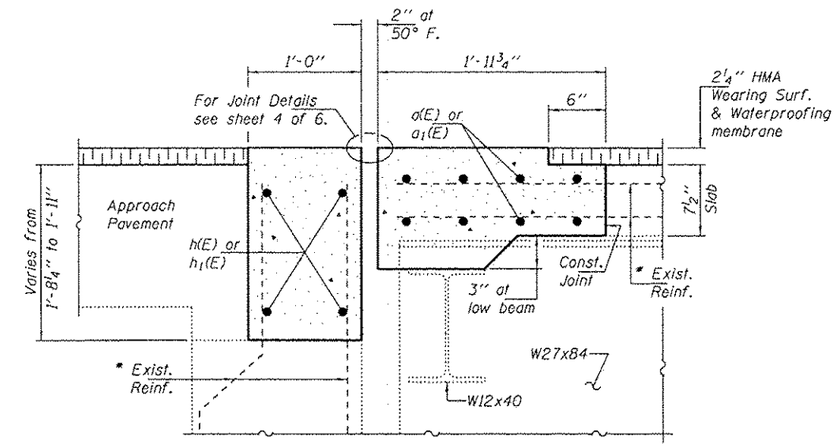

SECTION C-C

* Existing reinforcement bars extending into the removal area shall be cleaned, straightened and incorporated into the new construction. Any reinforcement bars that are damaged during concrete removal shall be replaced with an approved bar splicer or anchorage system. Cost included with Concrete Removal.

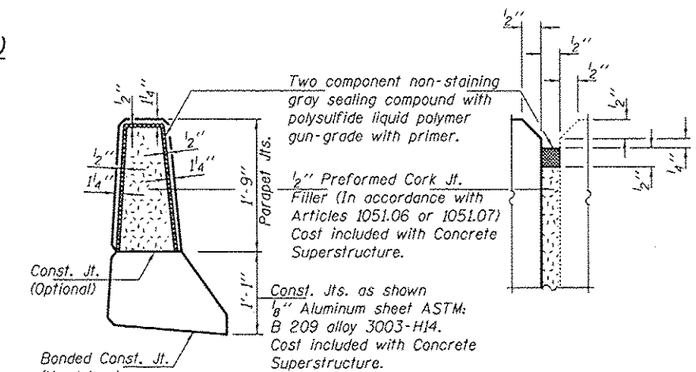

PARAPET JOINT DETAILS

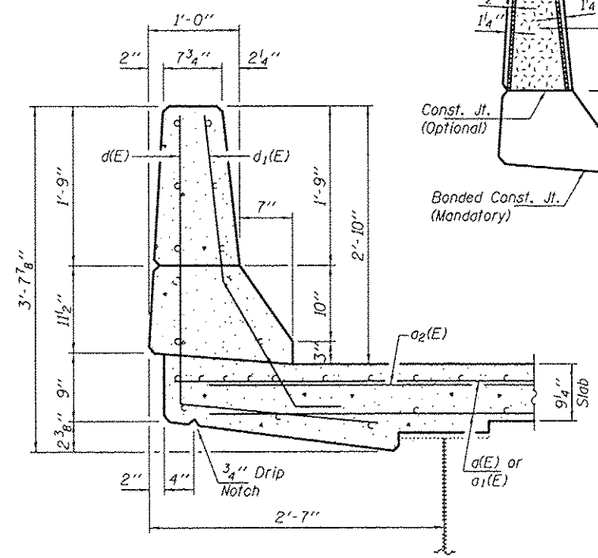

SECTION THRU PARAPET

BILL OF MATERIAL

Bar	No.	Size	Length	Shape
a(E)	16	#5	18'-3"	
a1(E)	16	#5	15'-10"	
a2(E)	12	#6	4'-0"	
d(E)	20	#4	5'-6"	L
d1(E)	20	#5	3'-11"	
h(E)	8	#6	18'-3"	
h1(E)	8	#6	15'-10"	
Concrete Removal			Cu. Yd.	9.7
Concrete Superstructure			Cu. Yd.	10.6
Reinforcement Bars, Epoxy Coated			Pound	1210

DESIGNED - ARS	EXAMINED	DATE - JANUARY 28, 2013	STATE OF ILLINOIS DEPARTMENT OF TRANSPORTATION
CHECKED - VP	ACTING ENGINEER OF STRUCTURAL SERVICES		
DRAWN - Kyle M. Steffen	PASSED		
CHECKED - ARS VP	ACTING ENGINEER OF BRIDGES AND STRUCTURES		

JOINT REPLACEMENT DETAILS
SN 052-0035
SHEET NO. 3 OF 6 SHEETS

F.A. RTE.	SECTION	COUNTY	TOTAL SHEETS	SHEET NO.
573	D2 DECK REPAIR 2013-2	LEE	22	19
		CONTRACT NO. 64H74		
		ILLINOIS FED. AID PROJECT		