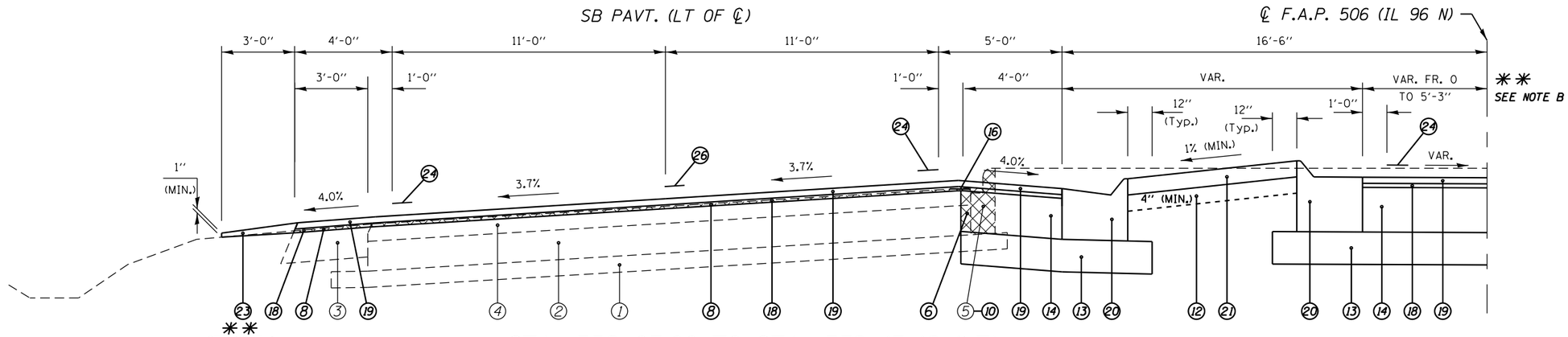

(11) STA. 338+07.00 TO STA. 339+17.49 (LT) [110.49']

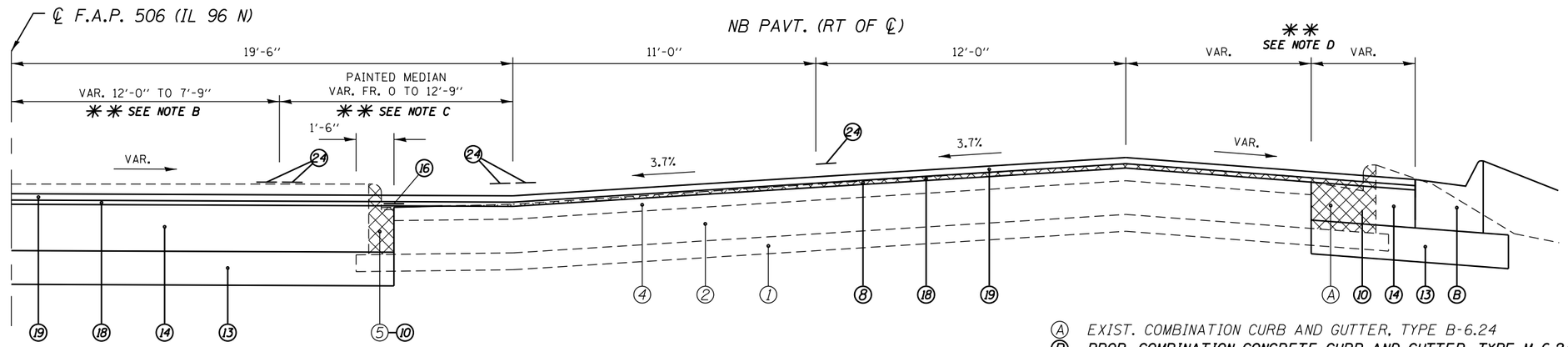

(11) STA. 338+07.00 TO STA. 339+17.49 (RT) [110.49']

Ⓐ EXIST. COMBINATION CURB AND GUTTER, TYPE B-6.24
Ⓑ PROP. COMBINATION CONCRETE CURB AND GUTTER, TYPE M-6.24

LEGEND

1. EXIST. 4" SUB-BASE GRANULAR MATERIAL
2. EXIST. 8" P.C.C. PAVEMENT
3. EXIST. 8" H.M.A. SHOULDER
4. EXIST. 4" OVERLAY
5. EXIST. COMBINATION CURB AND GUTTER, TYPE B-6.06
6. PROP. PAVEMENT REMOVAL
7. PROP. PAVED SHOULDER REMOVAL
8. PROP. HOT-MIX ASPHALT SURFACE REMOVAL (VARIABLE DEPTH) ✱
9. PROP. HOT-MIX ASPHALT SURFACE REMOVAL, 1 1/2"
10. PROP. COMBINATION CURB AND GUTTER REMOVAL
11. PROP. CONCRETE MEDIAN SURFACE REMOVAL
12. PROP. SUBBASE GRANULAR MATERIAL, TYPE B 4"
13. PROP. SUBBASE GRANULAR MATERIAL, TYPE A 8"
14. PROP. HMA BASE COURSE 11" ✱✱✱
15. PROP. PCC BASE COURSE WIDENING 9"
16. PROP. STRIP REFLECTIVE CRACK CONTROL TREATMENT
17. PROP. HOT-MIX ASPHALT SHOULDERS 6 1/2"
18. PROP. LEVELING BINDER (MACHINE METHOD), N70 1"
19. PROP. HOT-MIX ASPHALT SURFACE COURSE, MIX "D", N70 1 1/2"
20. PROP. COMBINATION CONCRETE CURB AND GUTTER, TYPE M-4.24
21. PROP. CONCRETE MEDIAN SURFACE, 4"
22. PROP. CONCRETE MEDIAN, TYPE SM-4.24
23. PROP. AGGREGATE WEDGE SHOULDER, TYPE B
24. PROP. MODIFIED URETHANE PAVEMENT MARKING - LINE 5"
25. PROP. MODIFIED URETHANE PAVEMENT MARKING - LINE 8"
26. PROP. PREFORMED PLASTIC PAVEMENT MARKING, TYPE B TYPE B - LINE 5"
27. PROP. PREFORMED PLASTIC PAVEMENT MARKING, TYPE B TYPE B - LINE 6"

✱ NOMINAL MILLING DEPTH 1/2" @ ℄ OR pgl
✱✱✱ WHERE WIDENING IS GREATER THAN 6' OR UNDER NEW TURN LANE

✱✱ NOTES:

(A) PROP. HMA SHOULDERS 6 1/2" IS LOCATED STA 338+26.79 TO 338+47.21 LT AND AGG. SHLDR. BEGINS AT STA. 338+47.21 LT.

(B) STRIPED SLT TURN LANE WIDTH VAR. FR. 0' TO 4'-3" FR. STA. 338+53.08 TO 339+17.49 LT AND VAR. FR. 12'-0" TO 7'-9" FR. STA. 338+53.08 TO 339+17.49 RT.

(C) PAINTED MEDIAN VAR. FR. 0' TO 12'-9" FR. STA. 338+59.48 TO 339+17.49 RT.

(D) REFER TO ELEVATION DETAIL SHEETS FOR WIDTHS OF EX. & PROP. PAV'TS.

• FAP 63 (US 24); FAP 63 (US 24/IL 96); FAP 506 (IL 96)

FILE NAME = c:\pw_work\pwidot\sparksgw\d0259630\D672E31-sht-typical.dgn	USER NAME = sparksgw	DESIGNED -	REVISED -
		DRAWN -	REVISED -
	PLOT SCALE = 100.0000 ' / in.	CHECKED -	REVISED -
	PLOT DATE = Dec-14-2012 03:45:12PM	DATE -	REVISED -

STATE OF ILLINOIS
DEPARTMENT OF TRANSPORTATION

TYPICAL SECTIONS

SCALE: NTS | SHEET NO. 10 OF 15 SHEETS | STA. 338+07.00 TO STA. 339+34.82

F.A.P. RTE.	SECTION	COUNTY	TOTAL SHEETS	SHEET NO.
•	(1)N,TS-2RS-5&(78)RS-3	ADAMS	194	48

CONTRACT NO. 72E31

ILLINOIS FED. AID PROJECT