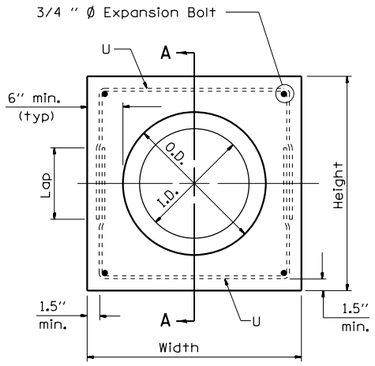

PIPE CULVERT EXTENSION COLLAR

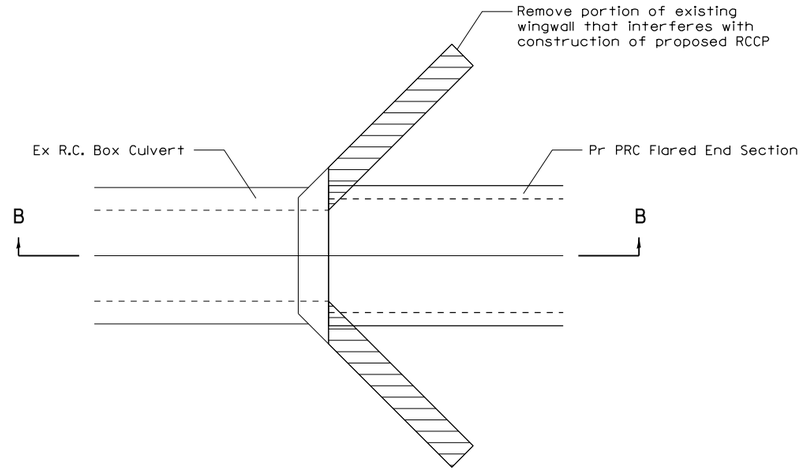

CONCRETE REMOVAL PLAN

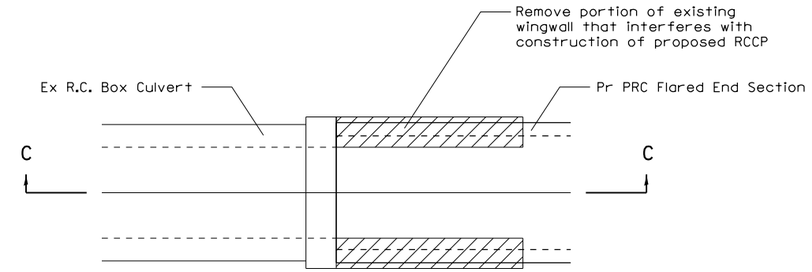

CONCRETE REMOVAL PLAN

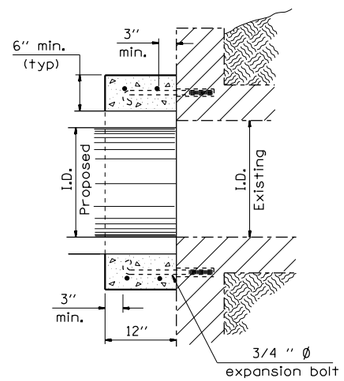

Section A - A

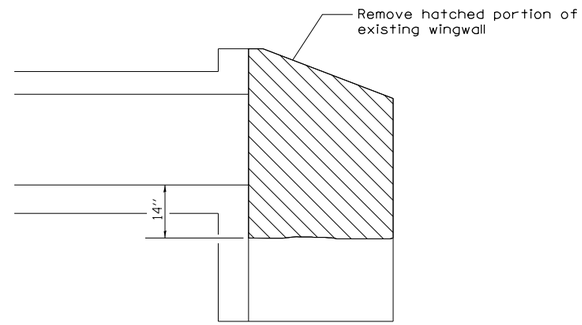

SECTON B-B

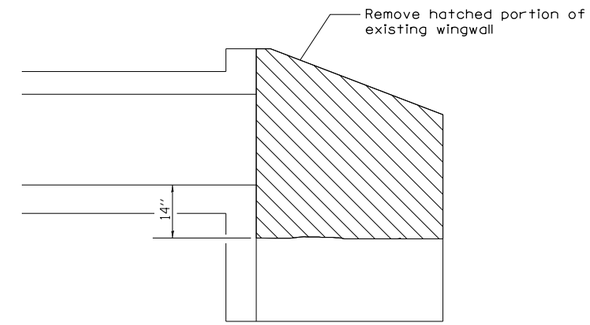

SECTON C-C

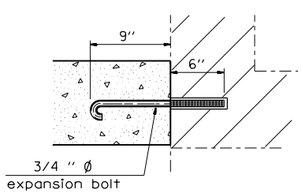

Expansion Bolt Detail

Notes:

1. Expansion bolts shall consist of self drilling expansion shields and ¾" Ø hooked bolts. Hooked bolts shall extend a minimum of 9" into new concrete. Minimum Certified Proof Load - 4,080 lbs.

2. Use minimum of 1 (one) expansion bolt at each corner.

EXPANSION BOLTS REQUIRED
FOR CULVERT EXTENSIONS

H or S	No. Expansion Bolts Req'd. Per Side			
	Extension ≦ 15ft		Extension > 15ft	
	No.	Spacing	No.	Spacing
24"	*	*	*	*
30"	2	18"	2	18"
36"	2	24"	2	24"
48"	3	18"	3	18"
60"	4	16"	3	24"
72"	5	15"	4	20"
84"	5	18"	4	24"
96"	6	17"	5	21"
108"	6	19"	5	24"
120"	7	18"	6	21"
132"	8	17"	6	24"
144"	8	19"	7	22"

Note: Number of expansion bolts in table based on non-skewed culverts.

* Use minimum 1 (one) expansion bolt in each corner.

Station	Skew	Existing Culvert	Proposed Culvert		Collar		Reinforcement Bars							Expansion Bolts 3/4 "	Concrete Removal	Class SI Concrete Collar
							U bar									
		Size	I.D.	O.D.	Height	Width	No.	Size	A	B	Lap	Length	lb	Each	cu yd	cu yd
297+14.76, 24.43' LT	NONE	2' x 2'	30"	37"	4'-1"	4'-1"	4	•4	3'-10"	2'-9"	1'-8"	9'-4"	30	8	0.68	0.34
349+00.00, 12.76 LT	NONE	2' x 2'	24"	30"	3'-6"	3'-6"	4	•4	3'-3"	2'-6"	1'-8"	8'-3"	22	8	0.68	0.27
										Total			52	16	1.36	0.61

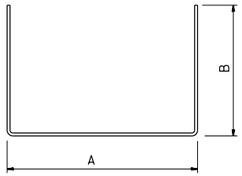

#4 U - bar

• FAP 63 (US 24); FAP 63 (US 24/IL 96); FAP 506 (IL 96)

FILE NAME =	USER NAME = sparksgw	DESIGNED -	REVISED -
c:\pw_work\pwidot\sparksgw\d0259630\D672E31-sht-collar.dgn		DRAWN -	REVISED -
	PLOT SCALE = 40.0000 ' / in.	CHECKED -	REVISED -
Default	PLOT DATE = Dec-14-2012 03:46:02PM	DATE -	REVISED -

STATE OF ILLINOIS
DEPARTMENT OF TRANSPORTATION

CONCRETE COLLAR AND
CULVERT EXTENSION DETAILS

SCALE: | SHEET OF SHEETS | STA. TO STA.

F.A.P. RTE.	SECTION	COUNTY	TOTAL SHEETS	SHEET NO.
•	(1)N,TS-2RS-5&(78)RS-3	ADAMS	194	141

CONTRACT NO. 72E31

ILLINOIS FED. AID PROJECT