Notes:

See sheet 11 of 23 for Detail A and View B-B.
Approach slab and parapet concrete shall be paid for as Concrete Superstructure.
Approach footing concrete shall be paid for as Concrete Structures.
Reinforcement shall be paid for as Reinforcement Bars, Epoxy Coated.
For $v_1(E)$ bar details, see sheet 13 of 23.
The approach footing maximum applied service bearing pressure (Qmax) = 2.0 ksf.
For bar splicer details, see sheet 21 of 23.
Cost of excavation for approach footing included with Concrete Structures.
For Granular Backfill for Structures and drainage treatment details, see sheet 2 of 23.
For additional parapet details, see sheet 9 of 23.

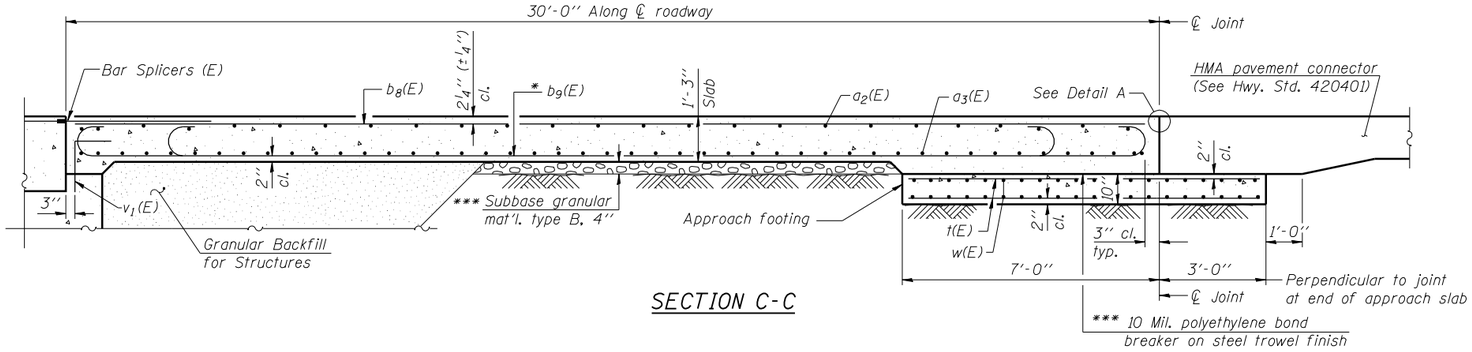

SECTION C-C

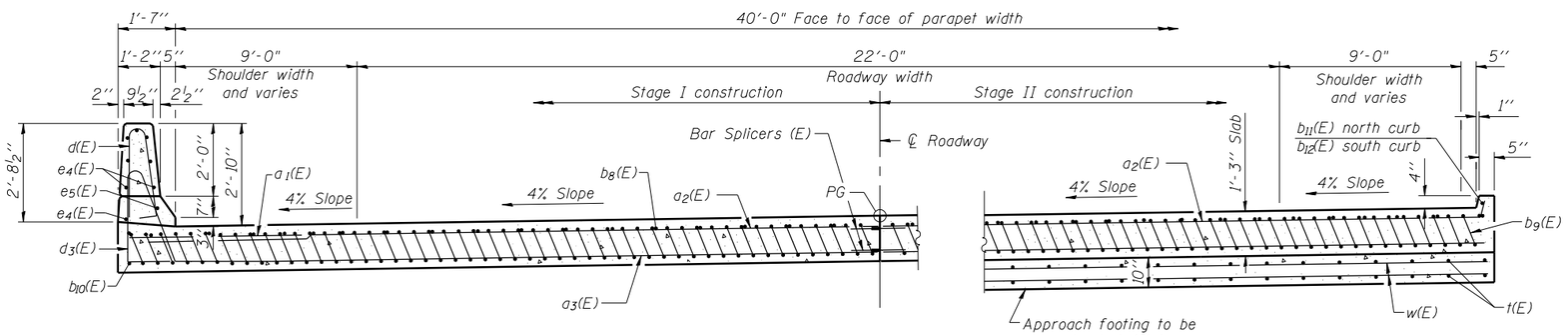

NEAR ABUTMENT

SECTION D-D

(See Plan for dimensions not shown)

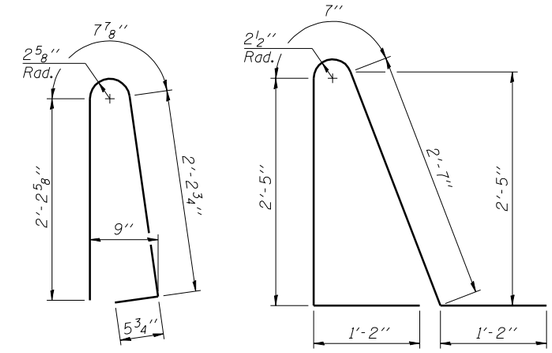

BAR d(E)

BAR $d_3(E)$

* Tilt #9 $b_9(E)$ bars as required to maintain clearance.

*** Cost included with Concrete Superstructure.

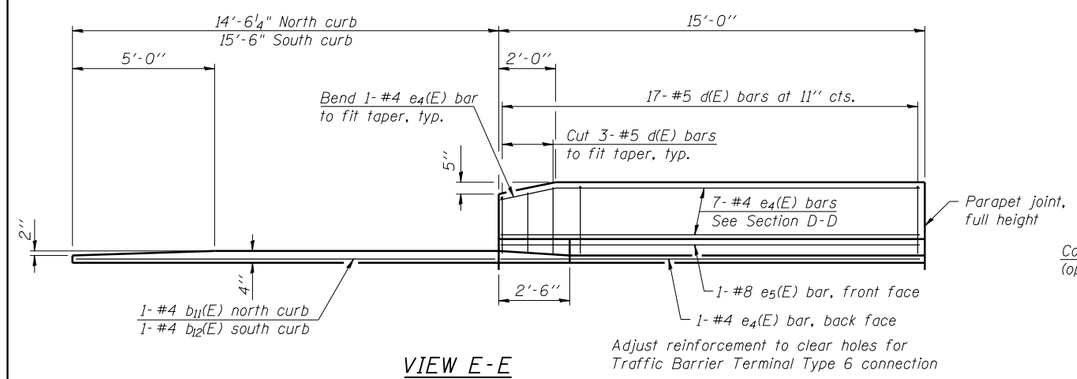

VIEW E-E

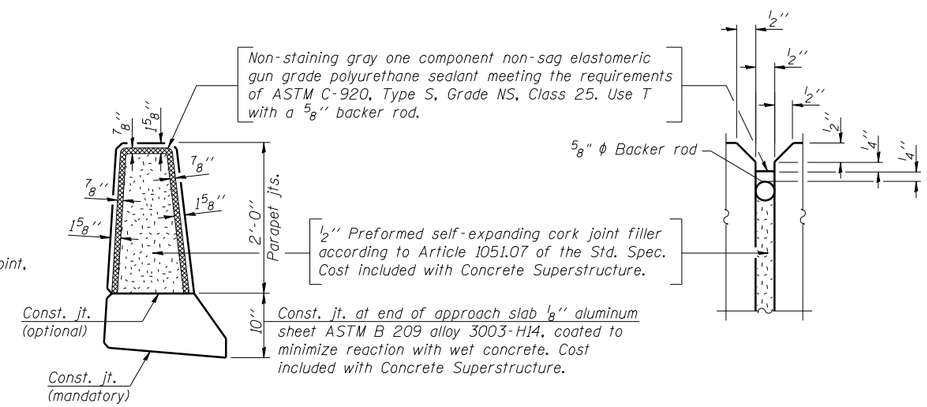

PARAPET JOINT DETAILS

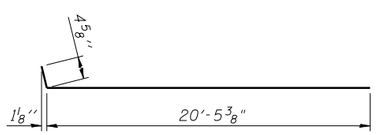

BAR $a_2(E)$

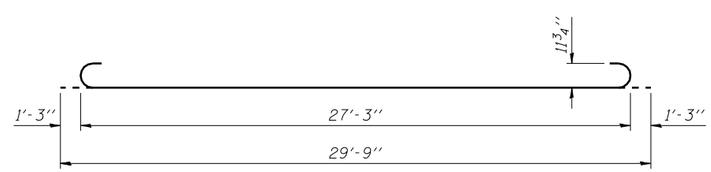

BAR $b_9(E)$

TWO APPROACHES BILL OF MATERIAL

Bar	No.	Size	Length	Shape
$a_1(E)$	48	#6	6'-6"	
$a_2(E)$	100	#4	20'-10"	
$a_3(E)$	184	#5	20'-7"	
$b_8(E)$	68	#4	29'-3"	
$b_9(E)$	200	#9	29'-9"	
$b_{10}(E)$	4	#4	14'-8"	
$b_{11}(E)$	2	#4	14'-2"	
$b_{12}(E)$	2	#4	15'-2"	
d(E)	68	#5	5'-7"	
$d_3(E)$	68	#5	7'-11"	
$e_4(E)$	32	#4	14'-8"	
$e_5(E)$	4	#8	14'-8"	
t(E)	168	#4	9'-8"	
w(E)	160	#5	20'-7"	
Concrete Superstructure			Cu. Yd.	132.8
Concrete Structures			Cu. Yd.	25.9
Reinforcement Bars, Epoxy Coated			Pound	33400
Bar Splicers			Each	222

(Sheet 2 of 2)

PRINT DRIVER = I.DOT.E.B.dwl3
PEN TABLE = IDOT.VERDOT.TBL
HOST NAME = IDOT-VERDOT
FILE NAME = 6978878-78154-12-Ap-Dt1.dgn

ESCA CONSULTANTS, INC. ROAD & STRUCTURAL DESIGNERS

USER NAME = has	DESIGNED - ELH/SHL 07/12	REVISED -	
ESCA PROJECT NO. 988.11	CHECKED - RDP 10/12	REVISED -	
PLOT SCALE = 0:2 ':' / IN.	DRAWN - HAS 07/12	REVISED -	
PLOT DATE = 10/31/2012 7:15:27 AM	CHECKED - ELH 10/12	REVISED -	

STATE OF ILLINOIS
DEPARTMENT OF TRANSPORTATION

BRIDGE APPROACH SLAB DETAILS
STRUCTURE NO. 097-0078

SHEET NO. 12 OF 23 SHEETS

F.A.P. RTE.	SECTION	COUNTY	TOTAL SHEETS	SHEET NO.
332	4B-1	WHITE	70	33
		CONTRACT NO. 78154		
		ILLINOIS FED. AID PROJECT AID		