CONTRACT NO. 72A04

F.A.P. RTE.	SECTION	COUNTY	TOTAL SHEETS	SHEET NO.
717	101B-1	LOGAN	49	5
STA.		TO STA.		
FED. ROAD DIST. NO.	ILLINOIS	FED. AID PROJECT		

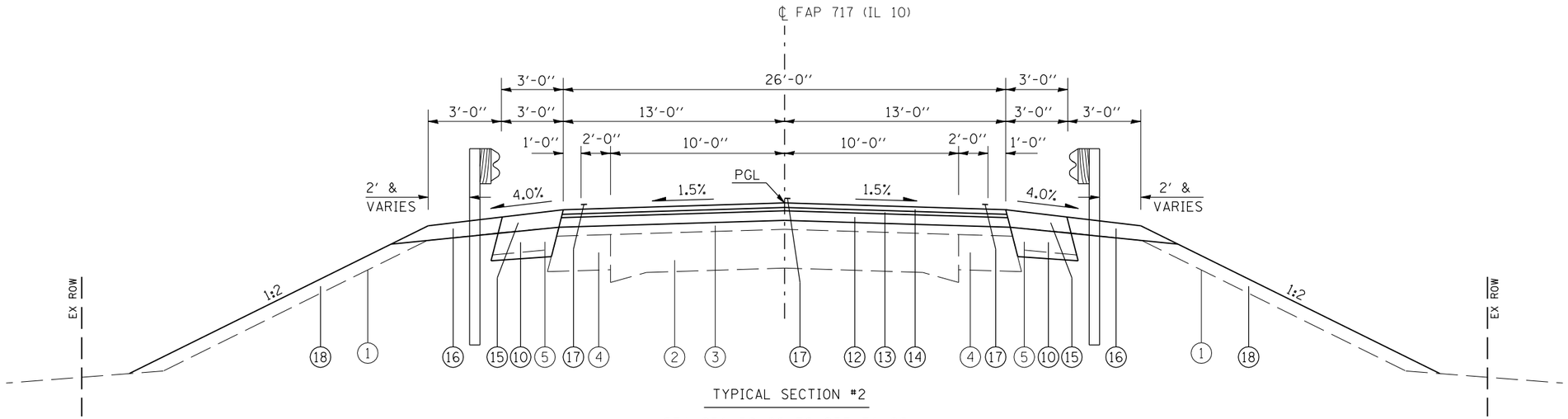

TYPICAL SECTION #2

STA 251+50.66 TO 257+71.62

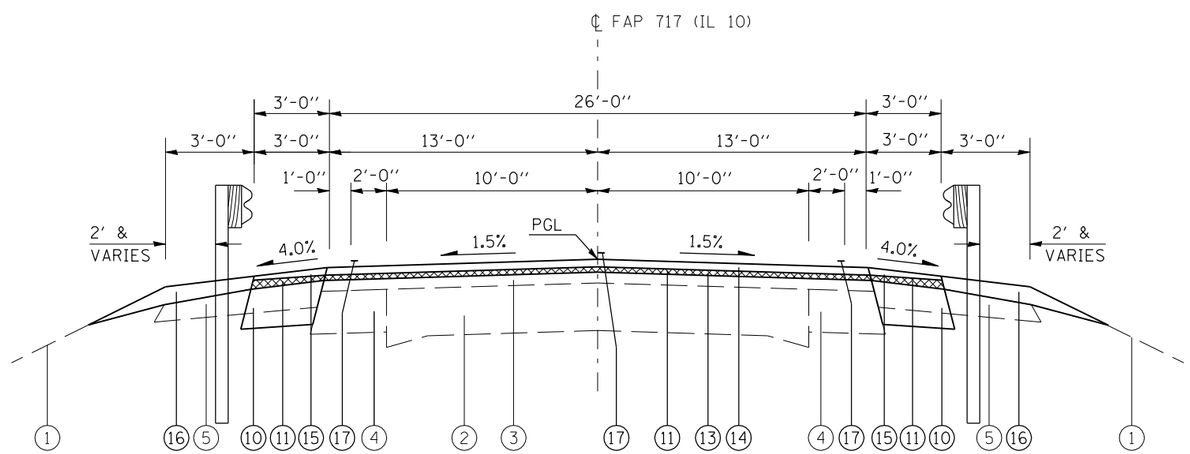

TYPICAL SECTION #1

STA 250+86.19 TO 251+50.66
STA 257+71.62 TO 258+49.59

EXISTING LEGEND

1. EXISTING GROUND
2. 9-6-9 PAVEMENT
3. BITUMINOUS OVERLAY (7")
4. BIT BASE COURSE WIDENING (9")
5. AGGREGATE SHOULDERS

PROPOSED LEGEND

10. HOT-MIX ASPHALT BASE COURSE WIDENING, 10"
11. HOT-MIX ASPHALT SURFACE REMOVAL - BUTT JOINT
12. HOT-MIX ASPHALT BINDER COURSE, IL-19.0, N50 (THICK VAR)
13. LEVELING BINDER (MACHINE METHOD), N50 (3/4 ")
14. HOT-MIX ASPHALT SURFACE COURSE, MIX "C", N50 1 1/2 "
15. HOT-MIX ASPHALT SHOULDERS (THICKNESS VARIES)
16. AGGREGATE SHOULDERS, TYPE B (6")
17. PAINT PAVEMENT MARKING - 5"
18. EMBANKMENT

BRIDGE AND APPROACH PAVEMENT OMISSION
STA 253+16.16 TO STA 256+35.66

REVISIONS	
NAME	DATE

ILLINOIS DEPARTMENT OF TRANSPORTATION

TYPICAL SECTIONS

FAP 717 (IL 10)
Section: 101B-1
Logan County

SCALE: NOT DRAWN TO SCALE — DRAWN BY TEC
DATE: — CHECKED BY

PROJECT: d653405 FILE: Shttypical.dgn