85399

ROUTE NO.	SECTION	COUNTY	TOTAL SHEETS	SHEET NO.
FAP 0525	*	WINNEBAGO	157	69
FED. ROAD DIST. NO. 7		ILLINOIS	FED. AID PROJECT	

* 02-00518-00-BR

SHEET NO. 12
50 SHEETS

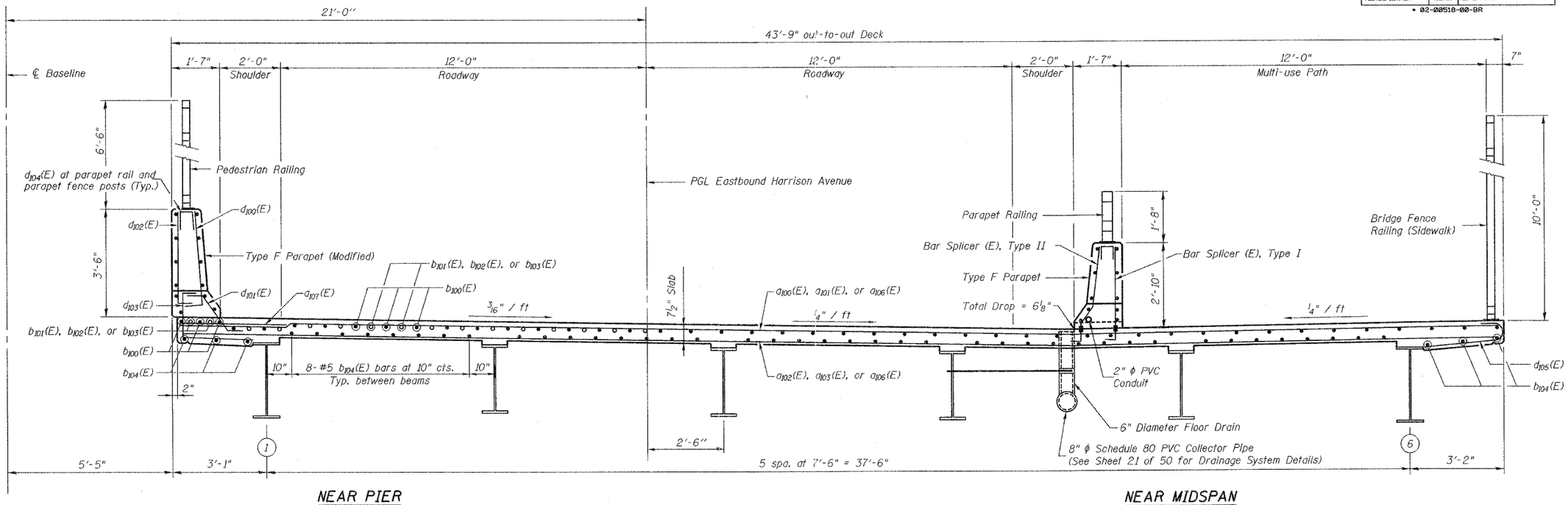

NEAR PIER

NEAR MIDSPAN

EASTBOUND CROSS SECTION

Looking East

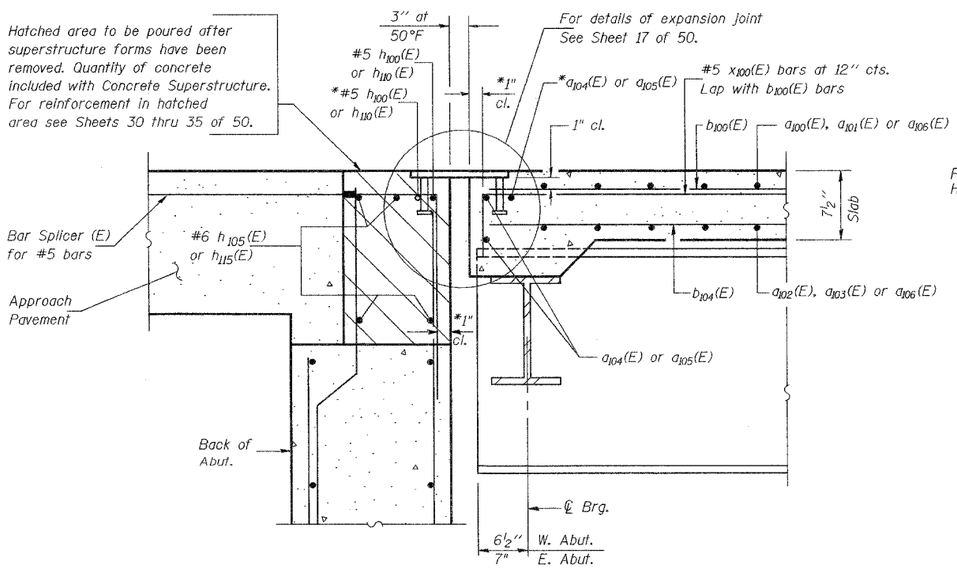

SECTION A-A

* Place a_{104}(E) or a_{105}(E) and h_{100}(E) or h_{110}(E) bars in back of anchor bolts as shown if required to maintain 1" cl. (±⅛"). Anchor bolts should be tied to a_{104}(E) or a_{105}(E) and h_{100}(E) or h_{110}(E) bars.

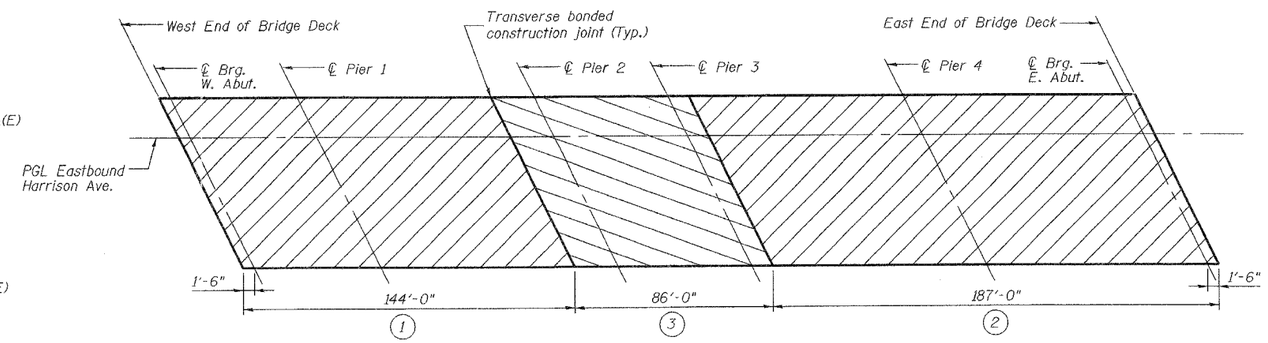

DECK POURING SEQUENCE

NOTES

The concrete deck slab segments shall be poured in numerical order as shown above.

When the deck pour is stopped for the day at one or more of the Transverse Bonded Construction Joints in the deck pouring sequence as shown, the next pour shall not be made until both of the following requirements are met:

1. At least 72 hours shall have elapsed from the end of the previous pour.
2. The concrete strength shall have attained a minimum modulus of rupture of 650 psi or a minimum compressive strength of 3500 psi.

Reinforcement bars designed (E) shall be epoxy coated.

See Sheets 13 and 14 of 50 for parapet reinforcement.

Work this Sheet with Sheets 10, 11 and 13 thru 16 of 50.

For Superstructure Bill of Material, see Sheet 16 of 50.

The sidewalk and the path surfaces of the bridge shall be finished according to Article 503.16(b)(1) of the Standard Specifications. Cost included in Concrete Superstructure.

Corporate License Number 184-001-084

SUPERSTRUCTURE DETAILS

EASTBOUND HARRISON AVENUE
OVER UP & CC&P RAILROAD
F.A.P. ROUTE 0525
SECTION 02-00518-00-BR
ROCKFORD, ILLINOIS
STATION 95+72.00
STRUCTURE NO. 101-6111

© Copyright Hanson Professional Services Inc. 2006

HANSON

JOB NO. 03R1751

DATE 12/14/06

LAYOUT	JKR	02/01/06
DRAWN	MGM/JKR	07/20/06
REVIEWED	FLN	08/04/06

10:59:46 AM
12/14/2006 10:59 AM
N:\03Jobs\03R175\Struct\Sheet\East Bound\S-012-EB-SuperDetail.dgn