ROUTE NO.	SECTION	COUNTY	TOTAL SHEETS	SHEET NO.
FAP 0525	*	WINNEBAGO	157	78
FED. ROAD DIST. NO. 7	ILLINOIS	FED. AID PROJECT		

* 02-00518-00-BR

SHEET NO. 21
50 SHEETS

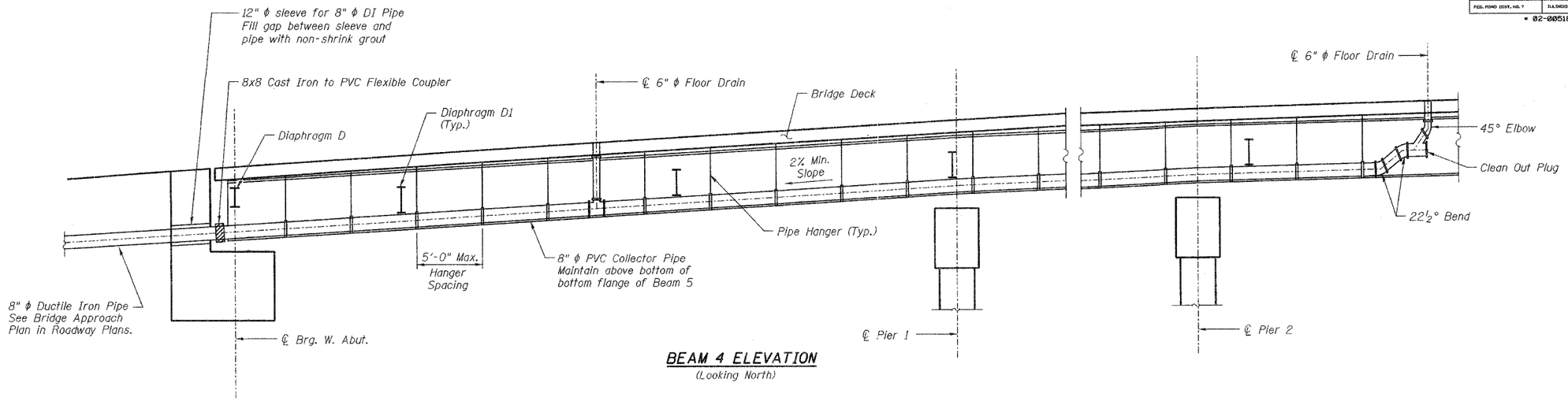

BEAM 4 ELEVATION
(Looking North)

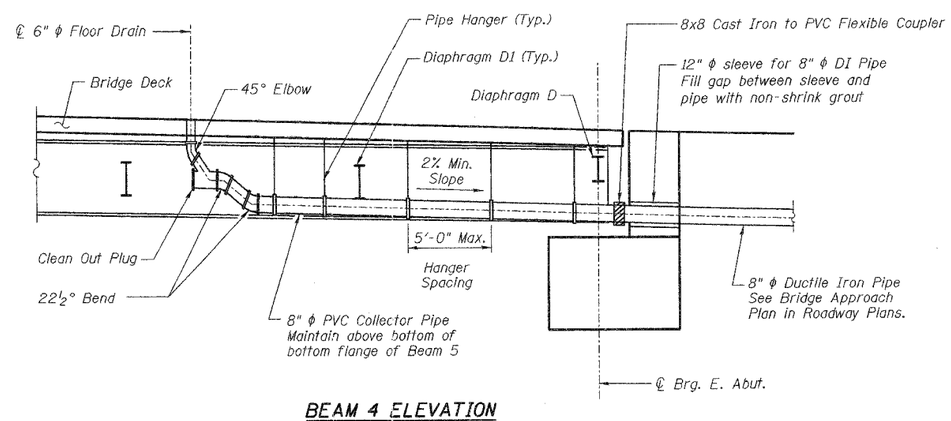

BEAM 4 ELEVATION
(Looking North)

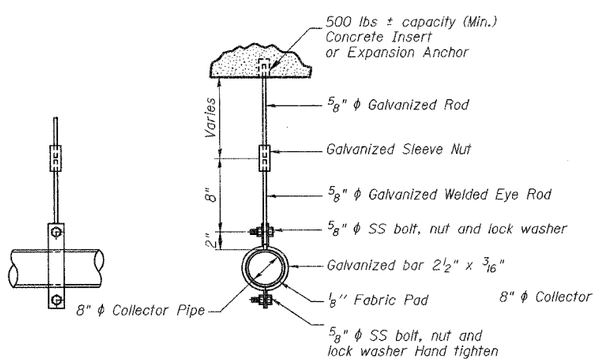

ELEVATION **TYPICAL SECTION**

ALTERNATE PIPE HANGER DETAIL

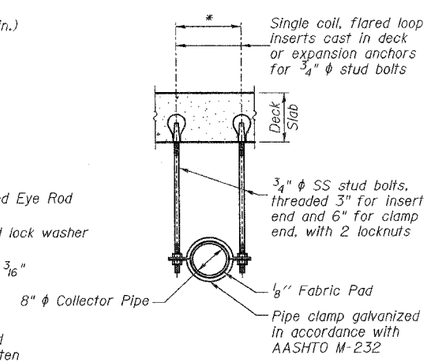

*Dimension as required by Pipe Clamp

PIPE HANGER DETAILS

NOTES

Collector Pipes, Drain Pipes, and fittings shall be 6" ϕ or 8"ϕ Schedule 80, PVC conforming to ASTM Standards D1785, D2464, or D2467.

Cost of Collector Pipes, Drain Pipes, fittings, pipe hangers, and couplers included in lump sum payment for Drainage System.

PVC Type material shall be gray in color or painted gray in accordance with PVC manufacturer's recommendations.

Corporate License Number 184-001-084

DRAINAGE SYSTEM DETAILS

EASTBOUND HARRISON AVENUE
OVER UP & CC&P RAILROAD
F.A.P. ROUTE 0525
SECTION 02-00518-00-BR
ROCKFORD, ILLINOIS
STATION 95+72.00
STRUCTURE NO. 101-6111

© Copyright Hanson Professional Services Inc. 2006

HANSON

JOB NO. 03R1751

DATE 12/14/06

9:46:57 AM
12-13-2006,0946 AM
I:\03Jobs\03R175\Struct\Sheet\East Bound\S-02I-EB-Collector-Pipe.dgn

LAYOUT	JKR	03/01/06
DRAWN	MGM/JKR	01/24/06
REVIEWED	FLN	08/04/06