ROUTE NO.	SECTION	COUNTY	TOTAL SHEETS	SHEET NO.
FAP 0525	*	WINNEBAGO	157	126
FED. ROAD DIST. NO. 7	ILLINOIS	FED. AID PROJECT		

SHEET NO. 19
50 SHEETS

* 02-00518-00-BR

85399

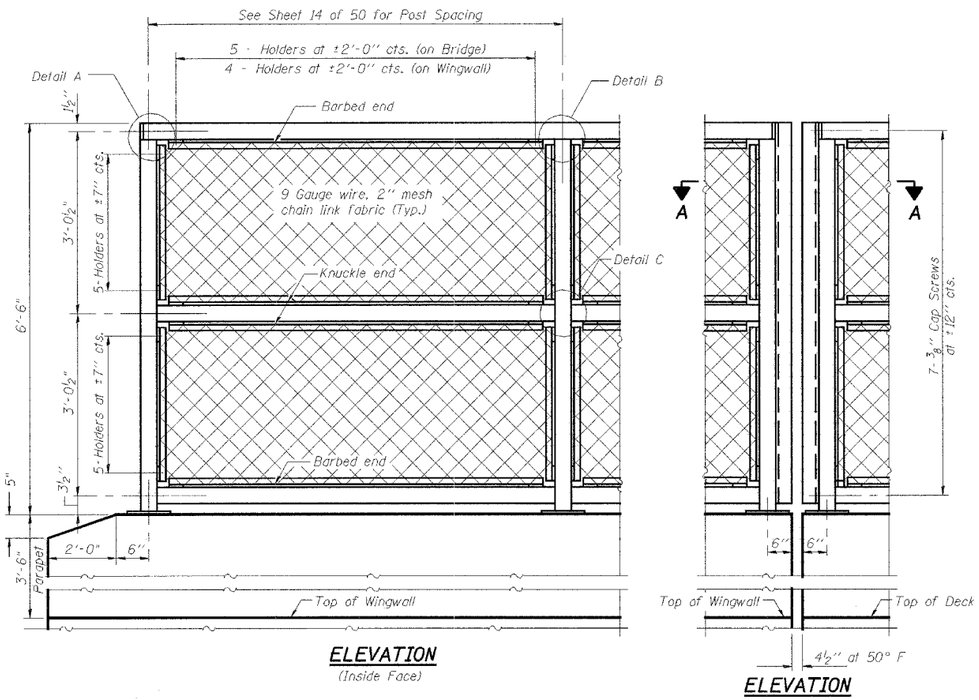

ELEVATION
(Inside Face)

ELEVATION
(At Expansion Joint)

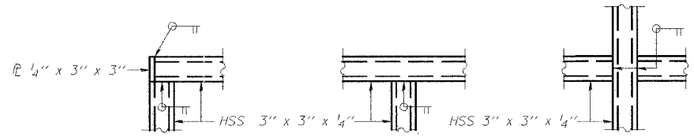

DETAIL A DETAIL B DETAIL C

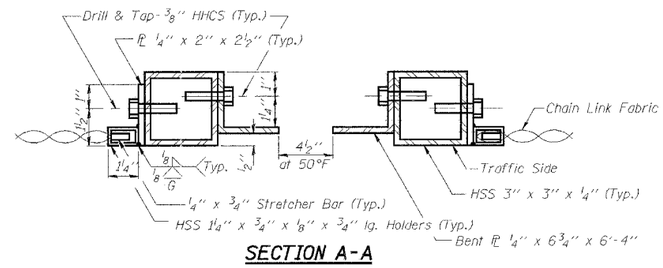

SECTION A-A

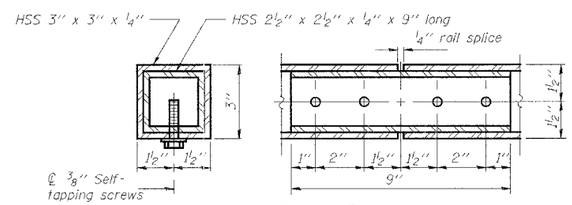

RAIL SPLICE

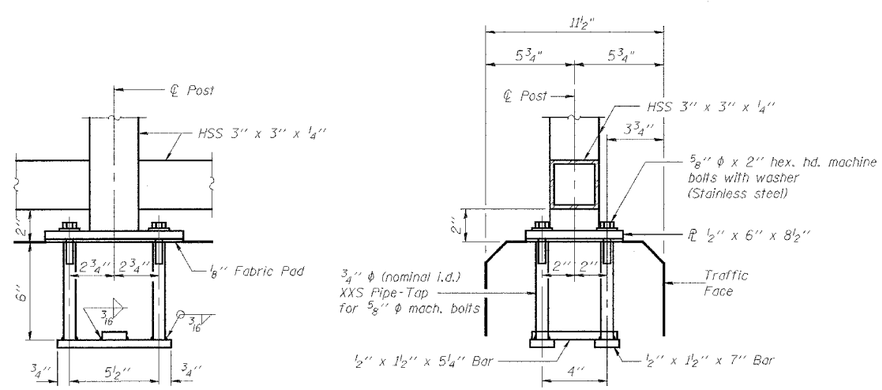

ANCHOR BOLT DETAILS

In lieu of the cast-in-place anchor device shown, the Contractor has the option of drilling and epoxy grouting ⅝" ϕ anchor rods. Embedment shall be according to the manufacturer's specifications.

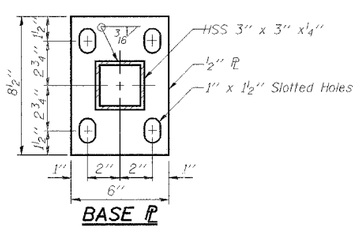

BASE PL

NOTES

Railing shall be according to Section 509 of the Standard Specifications, except as noted, and will be paid for at the Contract Unit Price per foot for Pedestrian Railing.

The 9 gauge fabric ties shall be according to Article 1006.27(d) of the Standard Specifications.

Installation of the chain link fabric shall be according to Section 664 of the Standard Specifications.

Hollow structural sections shall conform to the requirements of ASTM designation A 500, Grade B, structural steel tubing.

All other steel shapes and plates shall conform to the requirements of AASHTO M 270 Grade 36.

The chain link fabric shall be placed along Traffic Side as shown on Section A-A.

Stretcher bars shall be used at all four sides of each panel.

If the option of drilling and epoxy grouting the anchor rods is chosen, the Contractor shall use the capsule or the adhesive cartridge type anchor rods that have been previously tested and given a prior approval by the Department. The Contractor shall install these anchor rods in pre-drilled holes according to the manufacturer's recommendations and procedures. The capsule or the adhesive cartridge shall be sealed with pre-measured amounts of the adhesive chemical.

Space reinforcement to miss anchor rods.

All posts, railing, slices, anchor devices, and bent plates shall be galvanized after shop fabrication according to AASHTO M 111 and ASTM A 385. All bolts, nuts, washers, and anchor rods shall be galvanized according to AASHTO M 232 except stainless steel bolts as noted.

Vent holes for galvanizing shall be placed in the posts and rails at locations that will not allow the accumulation of moisture in the members.

The chain link fabric shall conform to the requirements of Article 1006.27(a)(1)a, b, or c of the Standard Specifications.

BILL OF MATERIAL

Item	Unit	Quantity
Pedestrian Railing	Foot	439

Corporate License Number 184-001-084

PEDESTRIAN RAILING

WESTBOUND HARRISON AVENUE
OVER UP & CC&P RAILROAD
F.A.P. ROUTE 0525
SECTION 02-00518-00-BR
ROCKFORD, ILLINOIS
STATION 95+25.35
STRUCTURE NO. 101-6109

© Copyright Hanson Professional Services Inc. 2006

HANSON

JOB NO. 03R1751

DATE 12/14/06

9:24:37 AM
DGN: 03R1751-00-04
MOD: Jun 01, 2006 Struct-Steel West Bound S-05HWB parapet fence.dgn

LAYOUT	MDM	09/07/06
DRAWN	MDM/JRB	07/13/06
REVIEWED	F.L.N.	08/02/06