CONTRACT NO. 98950

F.A. RTE.	SECTION	COUNTY	TOTAL SHEETS	SHEET NO.
*	**	WILLIAMSON	917	750
STA.		TO STA.		
FED. ROAD DIST. NO.	ILLINOIS	FED. AID PROJECT		

* I-57, & OLD IL 13 (FAU 9629)
** (X1-6-2)VB-2,(X1-6)MBK-2

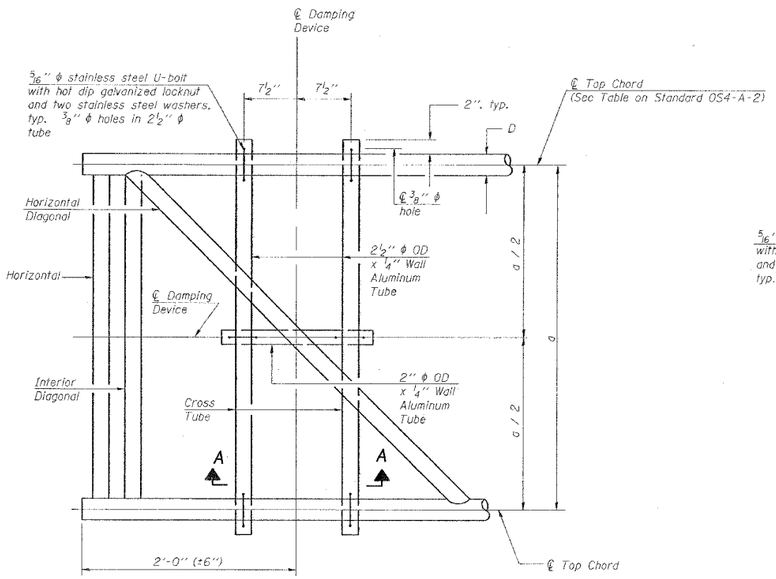

PLAN DETAIL

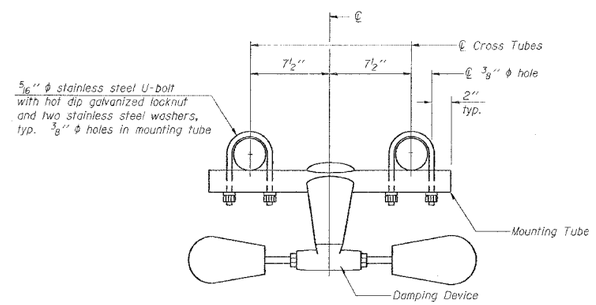

TRUSS DAMPING DEVICE CONNECTION DETAIL

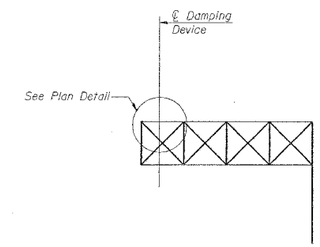

ELEVATION
Aluminum Cantilever Sign Structure

GENERAL NOTES

Damper: One damper per truss. (31 lbs. Stockbridge-Type Aluminum)

Materials: Aluminum tubes shall be ASTM B221 alloy 6061 temper T6

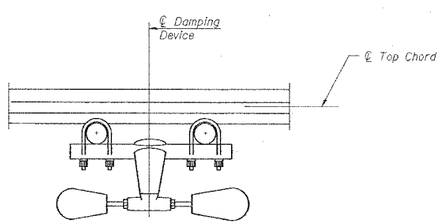

SECTION A-A

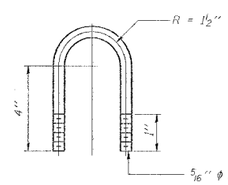

DAMPING DEVICE MOUNTING TUBE U-BOLT DETAIL
(Typical)

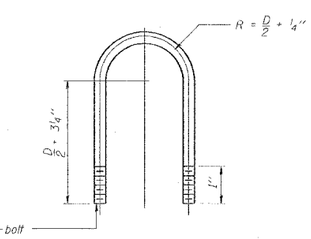

TOP CHORD TO CROSS TUBE U-BOLT DETAIL
(Typical)

REVISIONS	
NAME	DATE

ILLINOIS DEPARTMENT OF TRANSPORTATION

CANTILEVER SIGN STRUCTURE DAMPING DEVICE

SCALE: VERT. NONE HORIZ.
DATE
DRAWN BY CNH
CHECKED BY

OSC-A-D 1-7-05

PLOT DATE = 10/12/2006
FILE NAME = c:\pw_work\pw02502\oldi3\oldi3o5d.dgn
PLOT SCALE = 50.0000 ' / IN.
USER NAME = hasdon