CONTRACT NO. 98950

F.A. RTE.	SECTION	COUNTY	TOTAL SHEETS	SHEET NO.
*	**	WILLIAMSON	917	812
STA.		TO STA.		
FED. ROAD DIST. NO.	ILLINOIS	FED. AID PROJECT		

* I-57, & OLD IL 13 (FAU 9629)
** (X1-6-2)VB-2,(X1-6)HBK-2

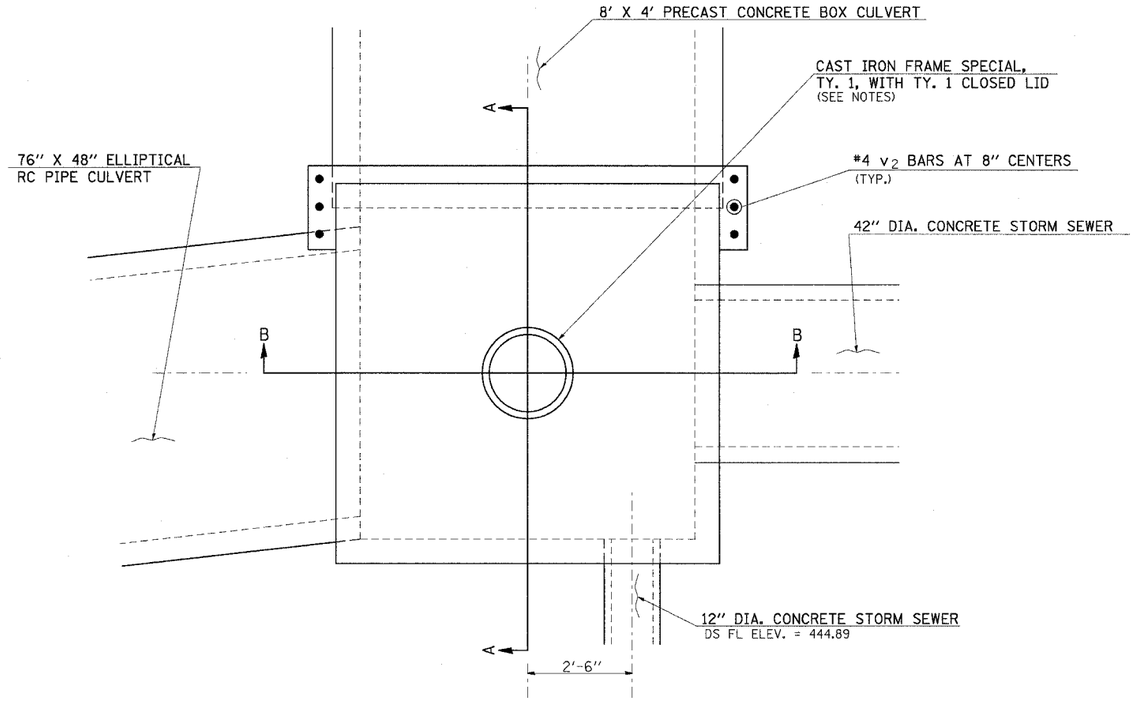

PLAN VIEW

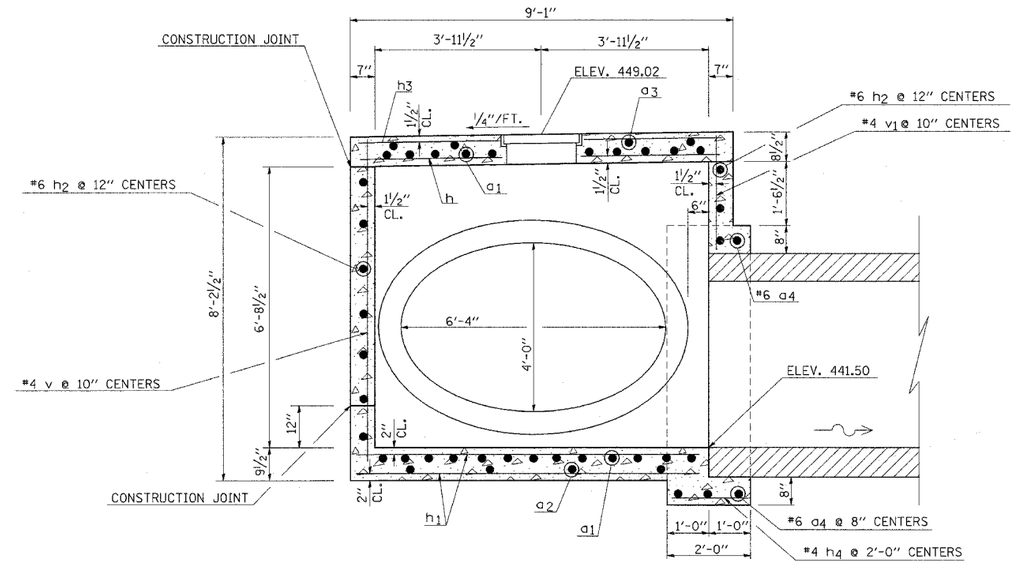

SECTION A-A

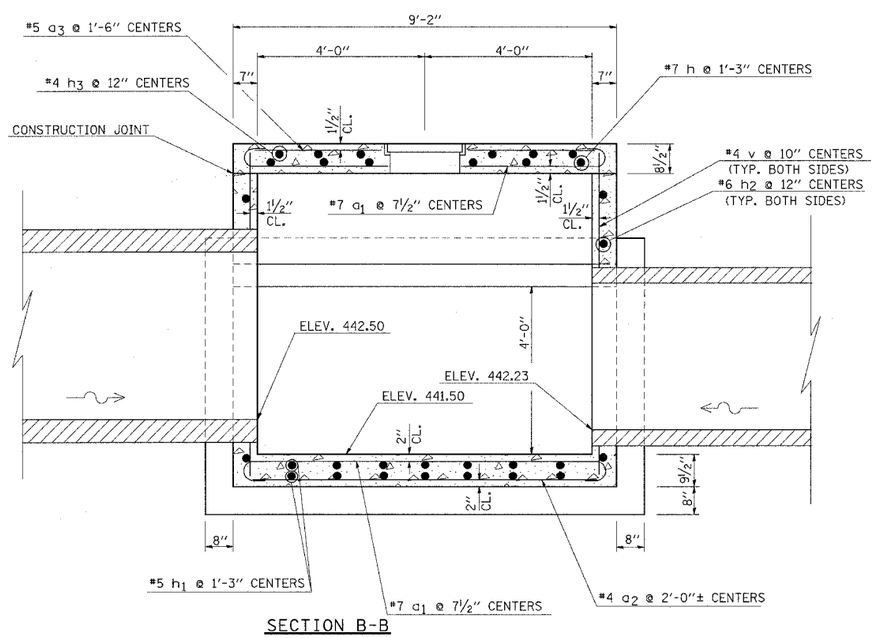

SECTION B-B

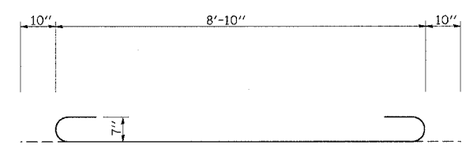

a1 BAR

NOTES

1. BECAUSE OF THE CAST IRON FRAME AND CONCRETE PIPES CONNECTING TO THE PROPOSED JUNCTION BOX, IT WILL BE NECESSARY FOR THE CONTRACTOR TO CUT SOME OF THE a_1, a_3, h, h_2, h_3, and v BARS IN THE FIELD TO FIT. PIECES CUT FROM THESE BARS SHALL BE USED TO COMPLETE THE LINES OF REINFORCEMENT BARS AS SHOWN ON THESE DETAILS AND AS DIRECTED BY THE ENGINEER.
2. ALL REINFORCEMENT BARS TOTALLY WITHIN THE TOP SLAB SHALL BE EPOXY COATED.
3. THE HOOKS OF THE a_1 BARS MAY BE TILTED IF NECESSARY TO PROVIDE THE SPECIFIED CLEARANCE.
4. THREE V BARS ARE TO BE PLACED VERTICALLY, AS DIRECTED BY THE ENGINEER, IN THE COLLAR AT EACH SIDE OF THE 8' x 4' BOX CULVERT.
5. SEE DISTRICT STANDARD 9-18 (SHEET 815) FOR DETAILS OF THE CAST IRON FRAME, SPECIAL, TYPE 1, WITH TYPE 1 CLOSED LID.

BILL OF MATERIAL

BAR	NUMBER	SIZE	LENGTH
a_1	26 *	#7	10'-6"
a_2	4	#4	8'-3"
a_3	6 **	#5	8'-3"
a_4	4	#6	10'-5"
h	7 **	#7	8'-10"
h_1	14	#5	8'-3"
h_2	22	#6	8'-10"
h_3	7 **	#4	8'-10"
h_4	6	#4	1'-9"
v	30	#4	7'-11"
v_1	11	#4	3'-5"
v_2	6	#4	6'-5"
CLASS SI CONCRETE		CU. YDS.	8.98
REINFORCEMENT BARS		LBS.	990
REINFORCEMENT BARS (EPOXY COATED)		LBS.	500
CAST IRON FRAME, SPECIAL, TY. 1 WITH TY. 1 CLOSED LID		EACH	1

* 13 OF THE a_1 BARS ARE TO BE EPOXY COATED.
** EPOXY COATED

REVISIONS NAME	DATE

ILLINOIS DEPARTMENT OF TRANSPORTATION

DETAILS OF JUNCTION BOX
RIGHT OF STATION 773+75 (OLD ROUTE 13)

SCALE: VERT. NONE HORIZ.
DATE
DRAWN BY CNH
CHECKED BY EES

PLOT DATE = 12/8/2006
FILE NAME = c:\projects\c982802\old13\old13s3.dgn
PLOT SCALE = 50.0000 ' / IN.
USER NAME = hesdon