CONTRACT NO. 98950

F.A. RTE.	SECTION	COUNTY	TOTAL SHEETS	SHEET NO.
*	**	WILLIAMSON	917	820
STA.		TO STA.		
FED. ROAD DIST. NO.	ILLINOIS	FED. AID PROJECT		

* I-57, & OLD IL 13 (FAU 9629)
** (X1-6-2)VB-2,(X1-6)HBK-2

DETAIL OF PCC SIDE ROADS WITH BUTT-JOINT

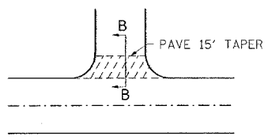

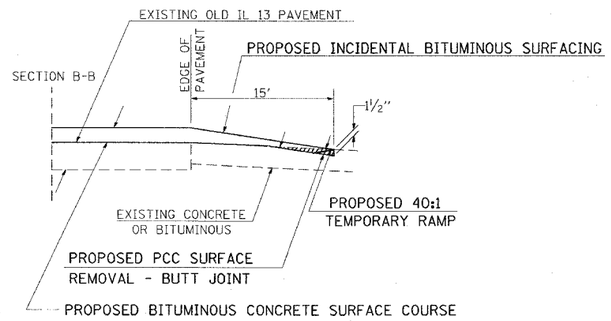

TO BE USED:
℄ OLD IL 13

COMFORT DRIVE STA. 764+65
COMMANDER DRIVE STA. 774+92
7TH STREET STA. 774+96
5TH STREET STA. 784+61

BUTT-JOINT

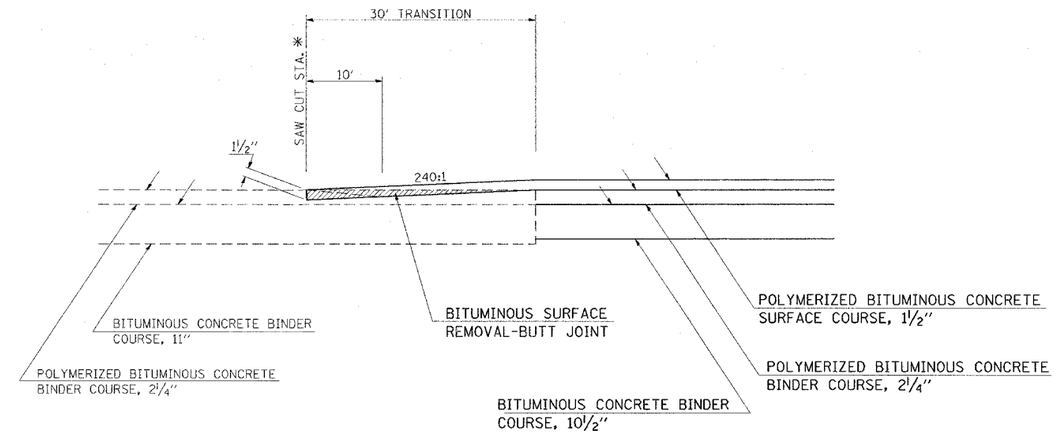

* TO BE USED:
STA. 4+70 RAMP F
STA. 8+67 RAMP EE

DETAIL OF BITUMINOUS, PCC, OR OIL AND CHIP PRIVATE OR COMMERCIAL ENTRANCE

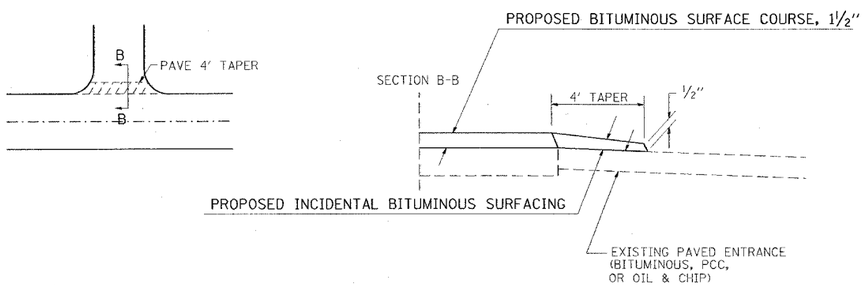

TO BE USED:

PREPARATION OF EXISTING SURFACE AND ANY EXCAVATION FOR ENTRANCES SHALL BE IN ACCORDANCE WITH ARTICLE 406.19 OF THE STANDARD SPECIFICATIONS.

BUTT-JOINT

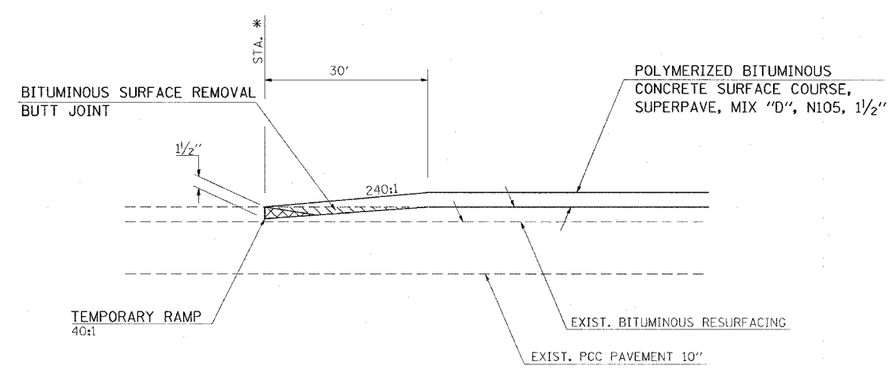

* TO BE USED:
STA. 753+20 (OLD IL 13)

REVISIONS	
NAME	DATE

ILLINOIS DEPARTMENT OF TRANSPORTATION

DETAILS:
BUTT JOINTS

SCALE: VERT. NONE HORIZ.
DATE
DRAWN BY CNH
CHECKED BY

PLOT DATE = 11/21/2006
FILE NAME = c:\pw_work\pw02682\old13\old13p3.dgn
PLOT SCALE = 50.0000 ' / IN.
USER NAME = Heddon