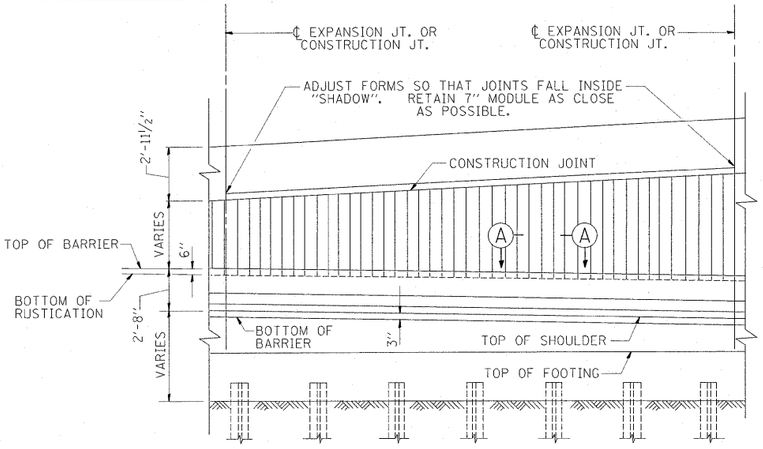

ELEVATION-TYPICAL ARCHITECTURAL FINISH

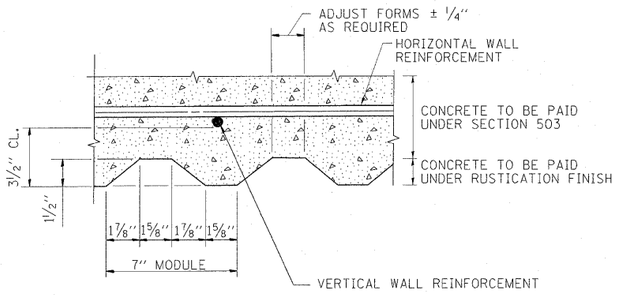

SECTION A-A

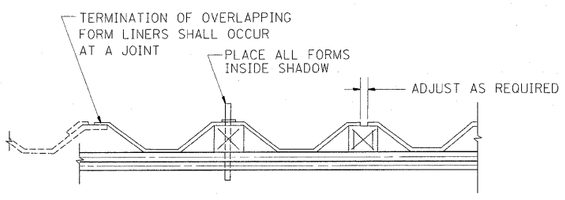

SUGGESTED FORMWORK DETAIL

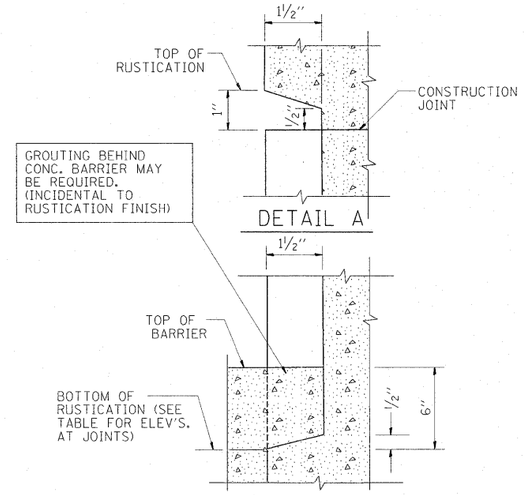

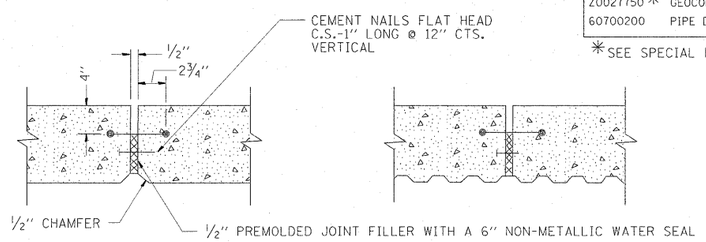

EXPANSION JOINT DETAIL

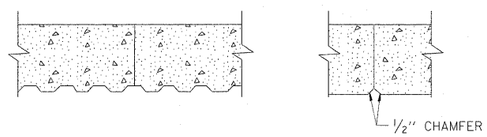

CONSTRUCTION JOINT DETAIL

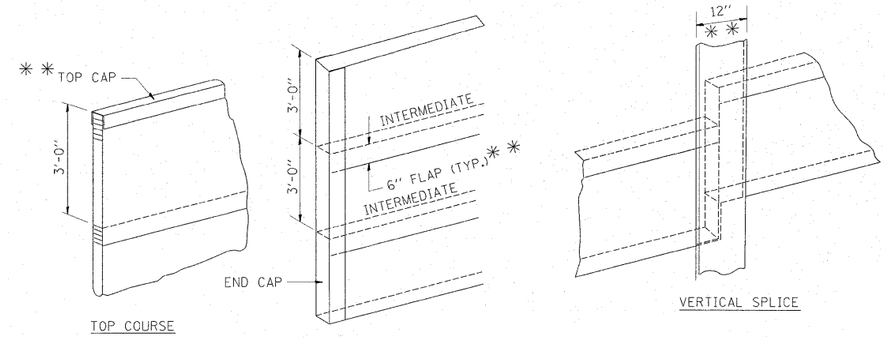

GEOCOMPOSITE WALL DRAIN DETAILS

** SEE RECURRING SPECIAL PROVISION #43 FOR GEOCOMPOSITE WALL DRAIN

PREFERRED PAY ITEMS

50400850 *	CLASS X CONCRETE (RETAINING WALL)	(C.Y.)
50400510 *	RUSTICATION FINISH	(S.F.)
60709582 *	PIPE UNDERDRAINS FOR STRUCTURES 6"	(L.F.)
Z0027750 *	GEOCOMPOSITE WALL DRAIN	(S.Y.)
60700200	PIPE DRAINS 6"	(L.F.)

* SEE SPECIAL PROVISIONS

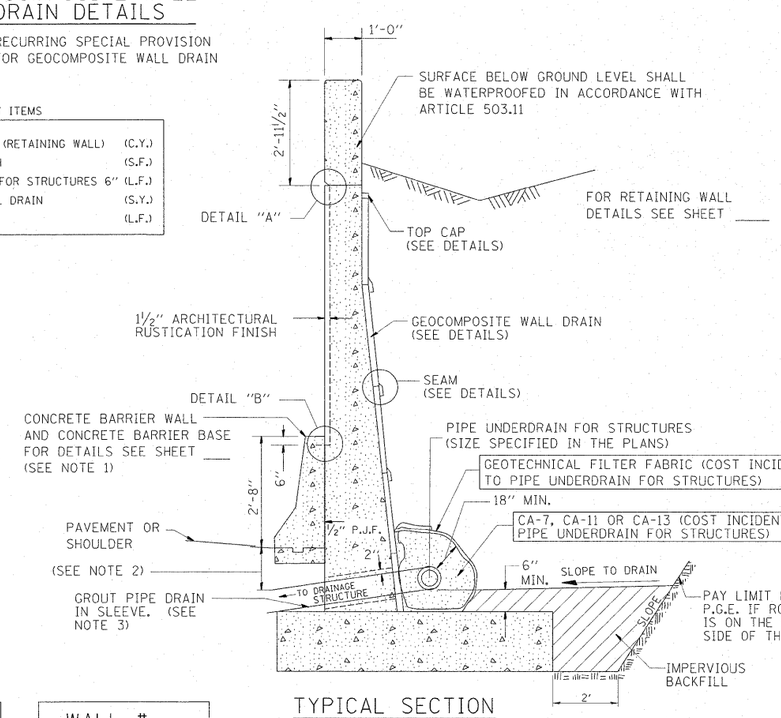

TYPICAL SECTION THRU RETAINING WALL

SLOPE: 1 TO 1 WITHOUT SHEETING
VERTICAL WITH SHEETING

WALL #	
STATION	ELEVATION

WALL #	
STATION	ELEVATION

WALL #	
STATION	ELEVATION

WALL #	
STATION	ELEVATION

WALL #	
STATION	ELEVATION

WALL #	
STATION	ELEVATION

WALL #	
STATION	ELEVATION

WALL #	
STATION	ELEVATION

NOTE 1.

CONCRETE BARRIER CONSTRUCTION:

WHEN THE CONCRETE BARRIER WALL IS TO BE CONSTRUCTED MONOLITHIC WITH THE RETAINING WALL THE DETAILS SHOWN IN THE RETAINING WALL SECTION SHALL GOVERN.

NOTE 2.

PIPE DRAIN SLOPE:

PRIOR TO THE PLACEMENT OF THE PIPE UNDERDRAIN SLEEVE THE ENGINEER SHALL DETERMINE THE SLOPE REQUIRED FOR THE PIPE UNDERDRAIN TO ENTER BELOW THE DRAINAGE STRUCTURE LID AT OR BELOW THE MINIMUM DISTANCE SHOWN ON THE DETAILS FOR THE STRUCTURE.

NOTE 3.

PIPE DRAIN

THE PIPE DRAIN SHALL TERMINATE AT A DRAINAGE STRUCTURE.

THE COST OF THE SLEEVE AND GROUT SHALL BE INCIDENTAL TO PIPE DRAINS.

FILE NAME = c:\pw_work\pwidot\steedpa\d0159915\DistStd.dgn	USER NAME = steedpa	DESIGNED - FORD	REVISED - DE YONG 07-11-90
		DRAWN - CADD	REVISED - DE YONG 08-18-90
	PLOT SCALE = 50.0000 ' / in.	CHECKED -	REVISED - DE YONG 07-09-91
	PLOT DATE = 12/7/2011	DATE - 11-30-88	REVISED - R. WEIDEMAN 02-20-04

STATE OF ILLINOIS
DEPARTMENT OF TRANSPORTATION

RUSTIFICATION FINISH AND GEOCOMPOSITE DRAIN FOR RETAINING WALLS

SCALE: NONE | SHEET NO. 1 OF 1 SHEETS | STA. | TO STA.

F.A.U. RTE.	SECTION	COUNTY	TOTAL SHEETS	SHEET NO.
1566	29 R-N-1	COOK	120	78

BD500-02 (BD-28) CONTRACT NO. 62377

FED. ROAD DIST. NO. 1 | ILLINOIS | FED. AID PROJECT