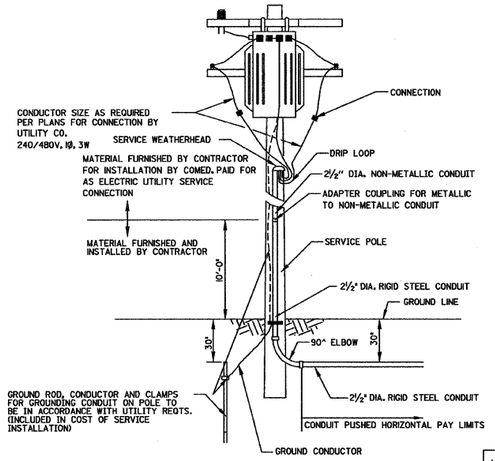

PROPOSED SERVICE INSTALLATION

NOTE:
GROUND ROD, GROUND CLAMPS, & GROUND WIRE TO BE IN ACCORDANCE WITH COMED REQUIREMENTS.

NOTE:
1. THE COST TO FURNISH AND INSTALL CONDUIT ON SERVICE POLE TO A HEIGHT NOT TO EXCEED 10' ABOVE GROUND INCLUDING 90° ELBOW SHALL BE INCLUDED IN THE BID UNIT COST FOR ELECTRIC SERVICE INSTALLATION.

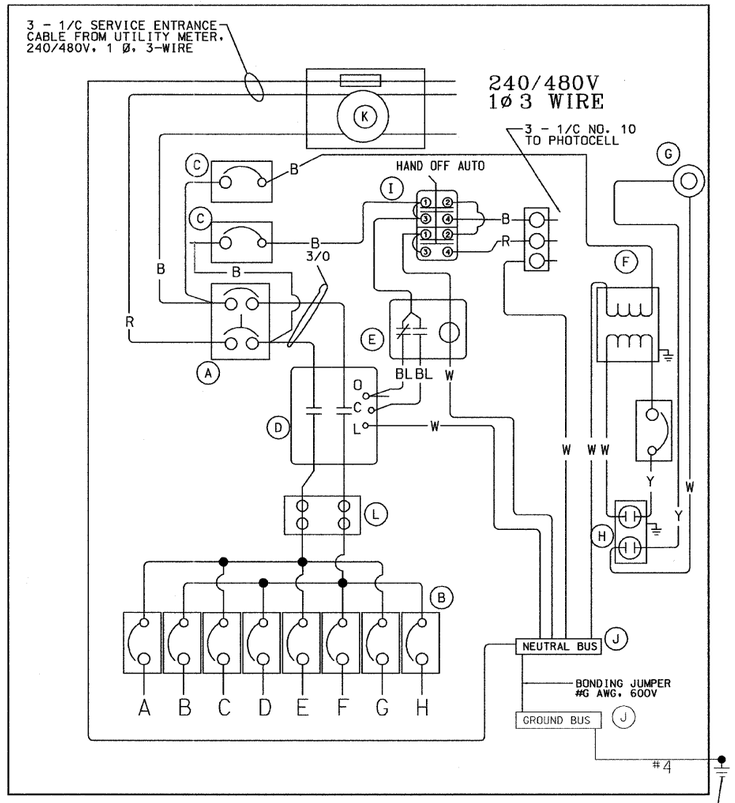

WIRING DIAGRAM

GROUNDING ROD 5/8" DIA. X 10' LONG

PANEL EQUIPEMNT

BILL OF MATERIAL		
ITEM	QUANTITY	DESCRIPTION
A	1	MAIN CIRCUIT BREAKER, 2P, 600V, 200 AMP AT 480V
B	8	CIRCUIT BREAKERS, 1P, 30AMP AT 240V
C	3	CONTROL CIRCUIT - CIRCUIT BREAKER, 1P 15 AMP
D	1	CONTACTOR, MECHANICALLY HELD, 240V COIL, 2P, 200 AMP
E	1	AUXILARY CONTROL RELAY
F	1	1.5 KVA, SINGLE PHASE, ENCAPSULATED TRANSFORMER
G	1	INCANDESCENT LIGHTING FIXTURE W/ PULL CHAIN, 120V, 60 WATT
H	1	20 AMP, 120V, DUPLEX RECEPTACLE, GFCI
I	1	HAND-OFF- AUTO SWITCH
J	2	GROUND AND NEUTRAL BUS, 1/4" X 1" X 12"
K	1	METER AND BASE, 200 AMP
L	1	SPLICE BLOCK

POWER WIRING RHH/RHW
CONTROL WIRING #12 MTW
NEUTRAL BUS COLOR CODED WHITE
GROUND BUS COLOR CODED GREEN
UL LISTED

BL= BLUE
W = WHITE
B = BLACK
R = RED
Y = YELLOW

REMOTE MOUNTED PHOTOCELL
ON NEAREST LIGHT POLE

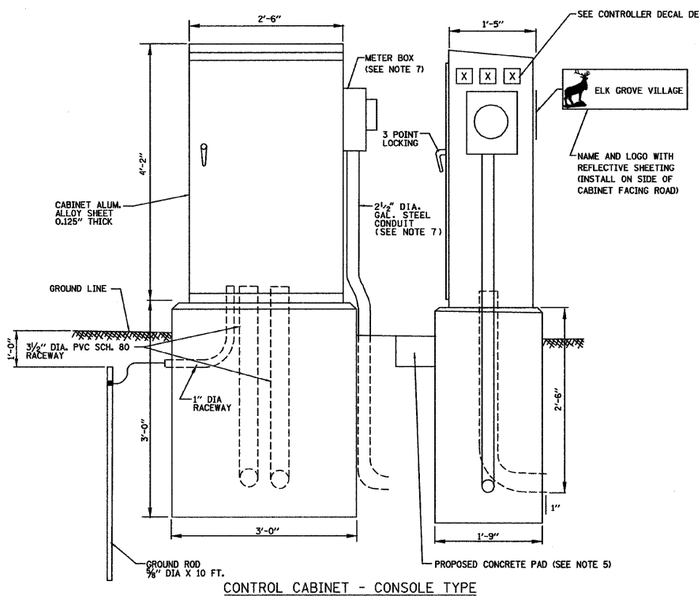

CONTROL CABINET - CONSOLE TYPE

NOTES:
1. CONTROL WIRING TO BE #12 AWG, 600 V, MTW SWITCH BOARD WIRE OF COLOR SPECIFIED IN WIRING DIAGRAM, STANDARD COPPER.
2. METER BOX SHALL BE MOUNTED ON THE SIDE OF CONTROL CABINET, NEAREST THE SERVICE POLE.
3. CONTROL CABINET DOOR SHALL FACE AWAY FROM THE ROADWAY.
4. FOR CABINET PAINTING REQUIREMENTS SEE CONTRACT SPECIFICATIONS.
5. A CONCRETE PAD, 36" X 36" X 3" MINIMUM SIZE. THE COST OF LABOR AND MATERIALS SHALL BE INCLUDED IN THE COST FOR LIGHTING CONTROLLER.
6. NAME AND LOGO SHALL BE ON BRONZE 3M SHEETING WITH WHITE REFLECTIVE LETTERING. SIZE 24" X 10" WITH 2" LETTERING.
7. METER BOX AND GALVANIZED CONDUIT PAINTED DARK BRONZE TO MATCH CONTROLLER.
8. THE PHOTOCELL SHALL BE INSTALLED ON THE POLE CLOSEST TO THE CONTROLLER AS SHOWN ON THE PLANS. THE COST TO FURNISH AND INSTALL THE PHOTOCELL INCLUDING WIRING OF THE SIZE SPECIFIED ON THE PLANS SHALL BE INCLUDED IN THE COST OF THE LIGHTING CONTROLLER.

CONTROLLER DECAL DETAIL

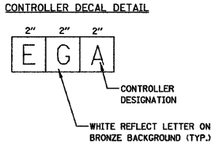

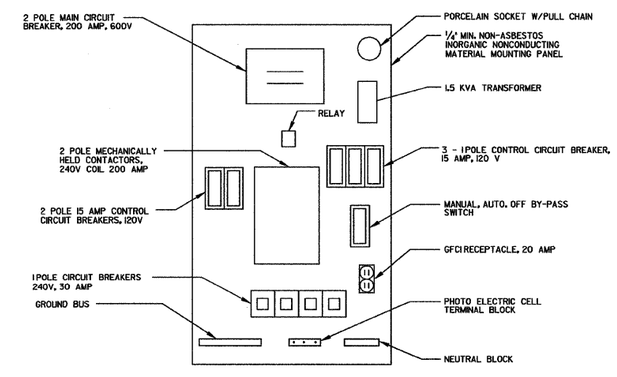

CONTROLLER EQUIPMENT LAYOUT

FILE NAME = g:\ch029\0132\road\Light0etl.dgn	USER NAME = ajpondexter	DESIGNED - KB	REVISED -	STATE OF ILLINOIS DEPARTMENT OF TRANSPORTATION
		DRAWN - AJP	REVISED -	
	PLOT SCALE = $SCALE$	CHECKED - SRF	REVISED -	
	PLOT DATE = 12/22/2011	DATE - 11/04/2011	REVISED -	

HIGHWAY LIGHTING LOAD CENTER INSTALLATION DETAILS

SCALE: NTS | SHEET NO. 19 OF 21 SHEETS | STA. | TO STA.

F.A.U. RTE.	SECTION	COUNTY	TOTAL SHEETS	SHEET NO.
2578	10-00059-00-LT	COOK	21	19
2585	JOB NO. C-91-460-10	CONTRACT NO. 63530		
FED. ROAD DIST. NO.	ILLINOIS	FED. AID PROJECT		