F.A.P RTE.	SECTION	COUNTY	TOTAL SHEETS	SHEET NO.
856	01-00170-26-TL	WILL	171	103
STA.		TO STA.		
FED. ROAD DIST. NO.	ILLINOIS	FED. AID PROJECT		
CONTRACT NO: 63570				

CONTROLLER SEQUENCE

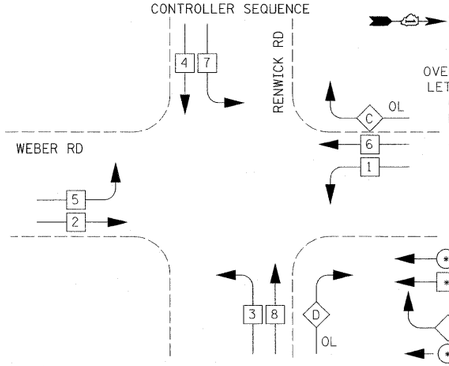

OVERLAP LETTER	PERMISSIVE PHASE	PROTECTED PHASE
C =	6	+ 7
D =	8	+ 1

LEGEND

- DUAL ENTRY PHASE
- SINGLE ENTRY PHASE
- OVERLAP
- PEDESTRIAN PHASE
- • NUMBER REFERS TO ASSOCIATED PHASE

PHASE DESIGNATION DIAGRAM

EMERGENCY VEHICLE PREEMPTION SEQUENCE

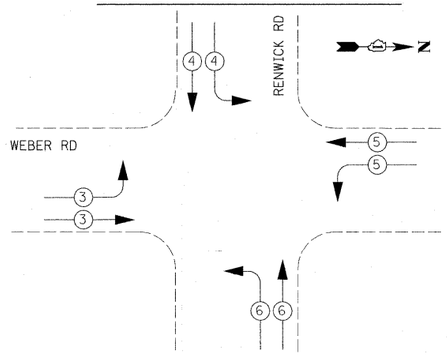

PROPOSED EMERGENCY VEHICLE PREEMPTORS				
EMERGENCY VEHICLE PREEMPTOR	3	4	5	6
MOVEMENT				

NOTE:
EQUIPMENT GROUND CONDUCTOR (GREEN COLOR CODED) SPLICE TO FRAME AND COVER IS REQUIRED FOR ALL HANDHOLES OR DOUBLE HANDHOLES THAT CARRY SIGNAL CABLES AND SERVICE CABLES.

I.D.O.T TRAFFIC SIGNAL INSTALLATION ELECTRICAL SERVICE REQUIREMENTS					TOTAL WATTAGE
TYPE	NO. LAMPS ×	WATTAGE INCAND.	WATTAGE LED	× %OPERATION	
SIGNAL (RED)	16		17	0.50	136.00
(YELLOW)	16		25	0.25	100.00
(GREEN)	16		15	0.25	60.00
ARROW	32		12	0.10	38.40
PED. SIGNAL	0		25	1.00	0.00
CONTROLLER	1		100	1.00	100.00
ILLUM. SIGN	4		25	0.50	50.00
FLASHER	0			0.50	0.00
				TOTAL =	484.40

ENERGY COSTS TO:
CITY OF CREST HILL
1610 PLAINFIELD ROAD
CREST HILL, ILLINOIS 60403

ENERGY SUPPLY CONTACT: JIM GLOVER
PHONE: (815) 724-5054
COMPANY: COMED

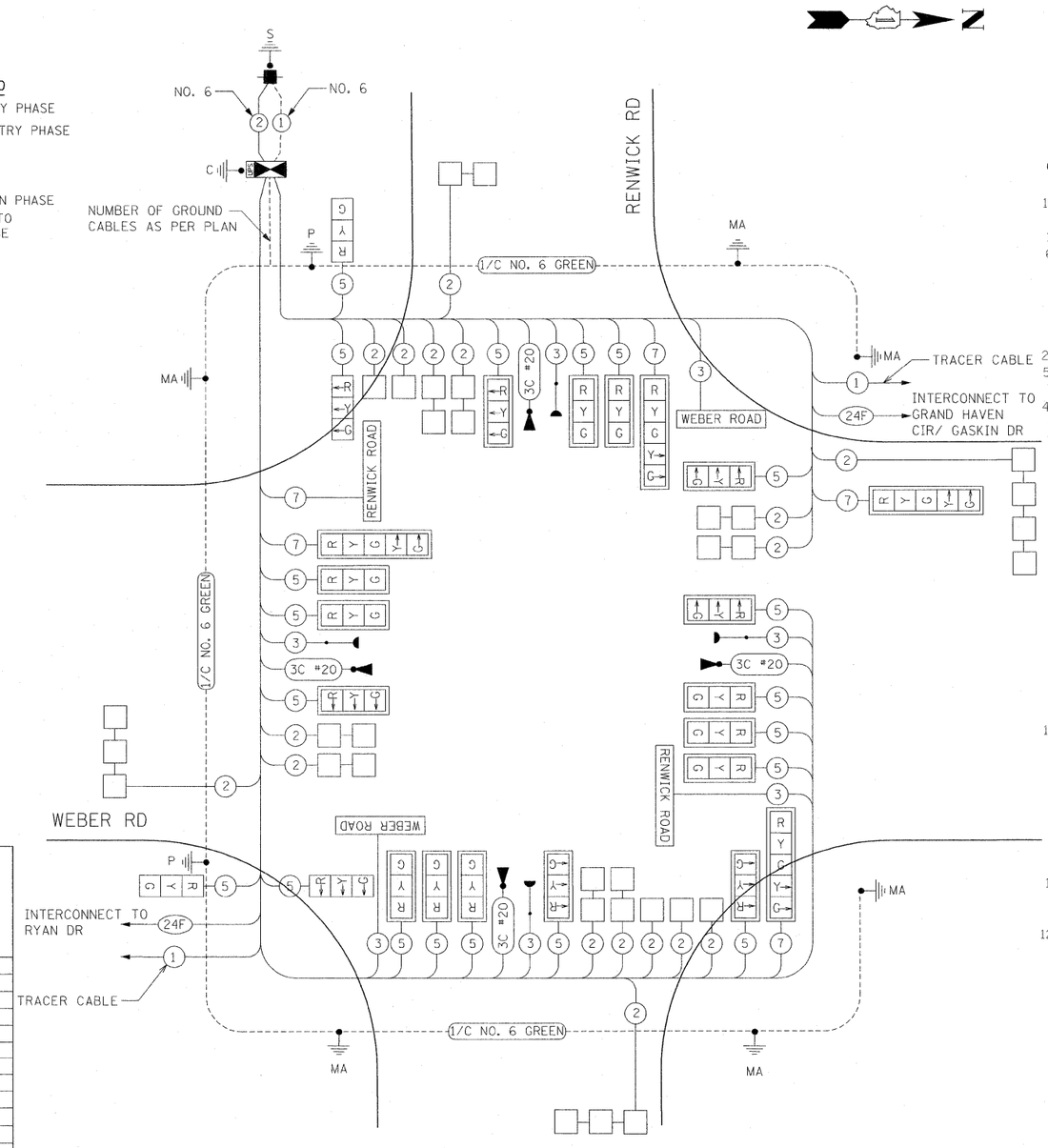

THE END OF TRACER CABLE SHALL BE CONTINUOUS AND EXTEND INTO THE CONTROLLER CABINET

CABLE PLAN
NOT TO SCALE

SCHEDULE OF QUANTITIES

QTY	UNIT	ITEM DESCRIPTION
1	EACH	SERVICE INSTALLATION - GROUND MOUNTED
1448	FOOT	UNDERGROUND CONDUIT, GALVANIZED STEEL, 2" DIA.
52	FOOT	UNDERGROUND CONDUIT, GALVANIZED STEEL, 2 1/2" DIA.
120	FOOT	UNDERGROUND CONDUIT, GALVANIZED STEEL, 3" DIA.
638	FOOT	UNDERGROUND CONDUIT, GALVANIZED STEEL, 4" DIA.
6	EACH	HANDHOLE
4	EACH	HEAVY-DUTY HANDHOLE
2	EACH	DOUBLE HANDHOLE
1	EACH	UNINTERRUPTIBLE POWER SUPPLY, STANDARD
1	EACH	TRANSCEIVER-FIBER OPTIC
2092	FOOT	ELECTRIC CABLE IN CONDUIT, SIGNAL NO. 14 3C
5213	FOOT	ELECTRIC CABLE IN CONDUIT, SIGNAL NO. 14 5C
741	FOOT	ELECTRIC CABLE IN CONDUIT, SIGNAL NO. 14 7C
4489	FOOT	ELECTRIC CABLE IN CONDUIT, LEAD-IN, NO. 14 1 PAIR
60	FOOT	ELECTRIC CABLE IN CONDUIT, SERVICE, NO. 6 2C
771	FOOT	ELECTRIC CABLE IN CONDUIT, EQUIPMENT GROUNDING CONDUCTOR, NO. 6 1C
2	EACH	TRAFFIC SIGNAL POST, GALVANIZED STEEL 14 FT.
1	EACH	STEEL MAST ARM ASSEMBLY AND POLE 30 FT.
1	EACH	STEEL MAST ARM ASSEMBLY AND POLE 32 FT.
1	EACH	STEEL COMBINATION MAST ARM ASSEMBLY AND POLE 48 FT.
1	EACH	STEEL COMBINATION MAST ARM ASSEMBLY AND POLE 50 FT.
1	EACH	STEEL COMBINATION MAST ARM ASSEMBLY AND POLE 52 FT.
1	EACH	STEEL COMBINATION MAST ARM ASSEMBLY AND POLE 54 FT.
8	FOOT	CONCRETE FOUNDATION, TYPE A
4	FOOT	CONCRETE FOUNDATION, TYPE C
27	FOOT	CONCRETE FOUNDATION, TYPE E 30-INCH DIAMETER
58	FOOT	CONCRETE FOUNDATION, TYPE E 36-INCH DIAMETER
16	EACH	SIGNAL HEAD, LED, 1-FACE, 3-SECTION, MAST ARM MOUNTED
4	EACH	SIGNAL HEAD, LED, 1-FACE, 5-SECTION, MAST ARM MOUNTED
2	EACH	SIGNAL HEAD, LED, 2-FACE, 3-SECTION, BRACKET MOUNTED
20	EACH	TRAFFIC SIGNAL BACKPLATE, LOUVERED, ALUMINUM
17	EACH	INDUCTIVE LOOP DETECTOR
1394	FOOT	PREFORMED DETECTOR LOOP
4	EACH	LIGHT DETECTOR
1	EACH	LIGHT DETECTOR AMPLIFIER
1	EACH	TEMPORARY TRAFFIC SIGNAL INSTALLATION
4	EACH	RELOCATE EXISTING ILLUMINATED SIGN
1	EACH	REMOVE EXISTING TRAFFIC SIGNAL EQUIPMENT
8	EACH	REMOVE EXISTING HANDHOLE
9	EACH	REMOVE EXISTING CONCRETE FOUNDATION
1	EACH	FULL-ACTUATED CONTROLLER AND CABINET, TYPE IV, SPECIAL
1116	FOOT	ELECTRIC CABLE IN CONDUIT NO. 20 3C, TWISTED, SHIELDED
1	EACH	RE-OPTIMIZE TRAFFIC SIGNAL SYSTEM LEVEL 2
1	EACH	TEMPORARY TRAFFIC SIGNAL TIMING
12109	FOOT	REMOVE ELECTRIC CABLE FROM CONDUIT

REVISIONS NAME	DATE

ILLINOIS DEPARTMENT OF TRANSPORTATION

RENWICK ROAD & WEBER ROAD
SCHEDULE OF QUANTITIES,
CABLE PLAN

SCALE: 1"=20' DRAWN BY JJS
DATE APRIL, 2011 CHECKED BY MFB

10/20/2011
P:\79766\cadd\drawings\103-Cable_Renwick.dgn