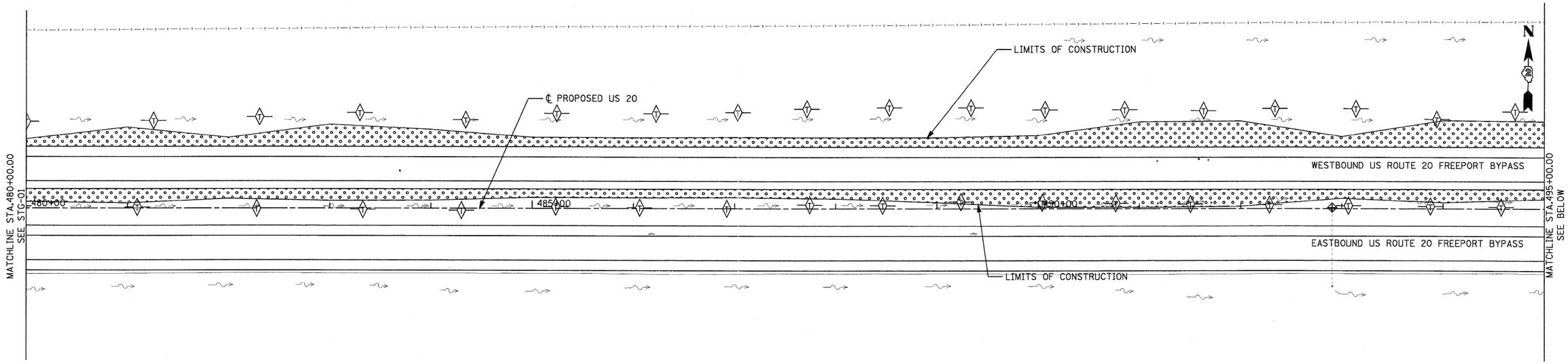

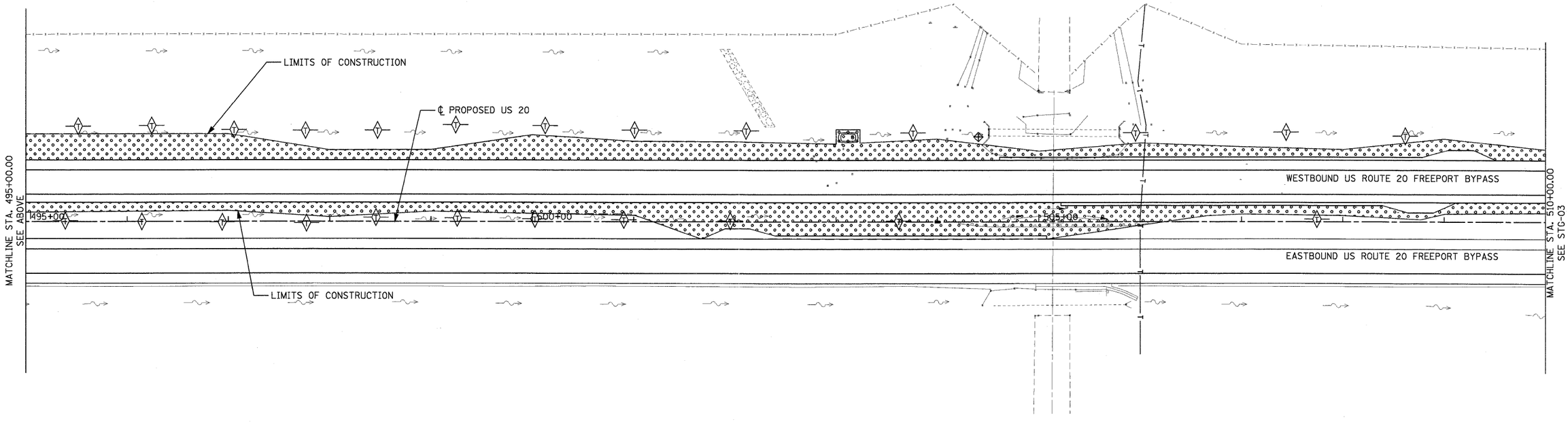

T:\16814A\Civil\PAV_Plans\20PAVec02.dgn

PARSONS BRINCKERHOFF 230 West Monroe St., Suite 900 Chicago, IL 60606, (312) 782-8150	USER NAME = MMS	DESIGNED - MMS	REVISED -	**STATE OF ILLINOIS DEPARTMENT OF TRANSPORTATION**	EROSION AND SEDIMENT CONTROL PLANS U.S. ROUTE 20
		DRAWN - MMS	REVISED -		
	PLOT SCALE = 50.00 ' / IN.	CHECKED - RMH	REVISED -		
	PLOT DATE = 9/28/11	DATE - $CH DATE$	REVISED -		SCALE:1"=50' SHEET NO. 3 OF 8 SHEETS STA. 480+00.00 TO STA. 510+00.00

F.A. RTE.	SECTION	COUNTY	TOTAL SHEETS	SHEET NO.
301	177-2-1	STEPHENSON	211	75
FINAL SUBMITTAL		CONTRACT NO. 64860		
		ILLINOIS FED. AID PROJECT P-92-014-03		