REMOVAL AND DISPOSAL OF UNSUITABLE MATERIAL *		
STATION RANGE	WIDTH	DEPTH BELOW SUB-GRADE
STA. 222+55.00 TO STA. 225+20.00	33.58′ - 45.58′ RT. TO 33.58′ LT.	2.00′
STA. 238+10.00 TO STA. 240+27.00	33.58′ RT. TO 33.58′ LT.	2.00′
STA. 240+27.00 TO STA. 244+20.00	EX. LT. EOP TO 33.58′ LT.	1.00′**
STA. 244+20.00 TO STA. 247+82.00	33.58′ RT. TO 33.58′ LT.	2.00′
STA. 247+82.00 TO STA. 253+72.00	EX. LT. EOP TO 33.58′ LT.	0.67′**
STA. 253+72.00 TO STA. 259+77.00	33.58′ RT. TO 33.58′ LT.	2.00′
STA. 259+77.00 TO STA. 260+95.00	41.17′ RT. TO 41.17′ LT.	2.00′

* ALL EXCAVATED MATERIAL FROM THE NATURAL GROUND SURFACE TO DEPTH BELOW SUBGRADE AS SHOWN IS UNSUITABLE AND IS TO BE WASTED OFF SITE, WITH THE EXCEPTION OF TOPSOIL EXCAVATION.

** UNDERCUT AREA TO BE REPLACED WITH APPROVED EMBANKMENT MATERIAL.

LEGEND

- EXISTING PAVEMENT MARKING
- TEMPORARY PAVEMENT MARKING
- PROPOSED PAVEMENT MARKING
- DRUM, WITH STEADY BURNING LIGHT
- TEMPORARY CONCRETE BARRIER
- CONSTRUCTION THIS STAGE
- VERTICAL PANEL WITH STEADY BURNING LIGHT
- EXISTING TRAFFIC LANE IN USE
- TRAFFIC LANE

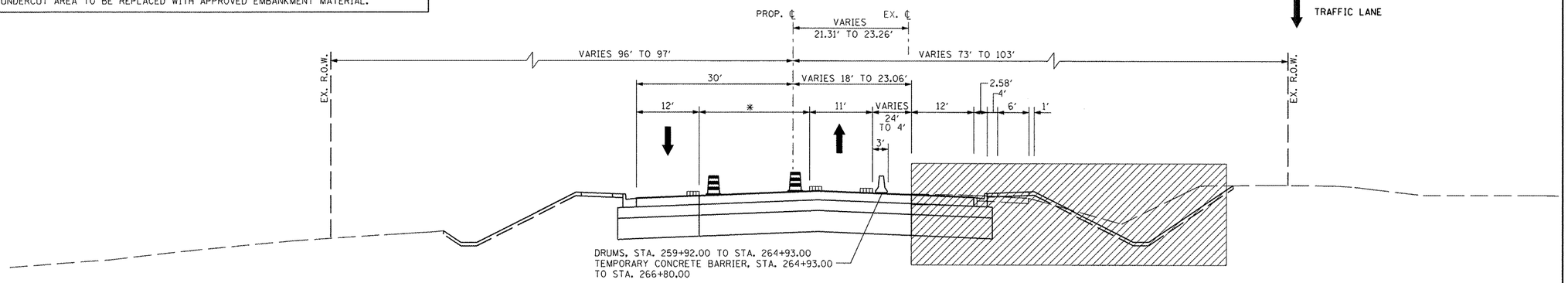

* VARIES FROM 0′ @ STA. 259+77.73 TO 33.12′ @ STA. 266+35.00

MAINTENANCE OF TRAFFIC TYPICAL SECTION

STA. 259+92.13 TO STA. 265+99.88

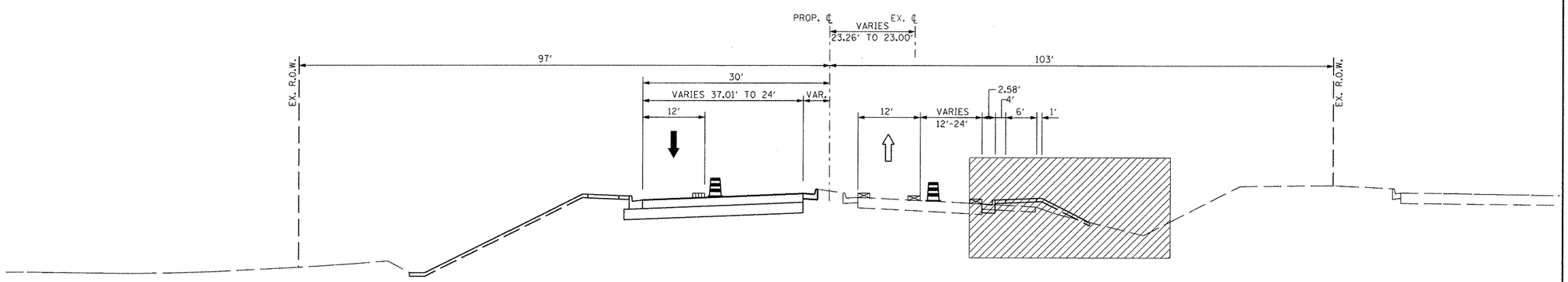

MAINTENANCE OF TRAFFIC TYPICAL SECTION

STA. 265+99.88 TO STA. 270+78.11

FILE NAME = x:\projects\200803566\dgn\D4-Rte8-sht-Staging-Typ-3-2.dgn	USER NAME = IDOT	DESIGNED -	REVISED -	STATE OF ILLINOIS DEPARTMENT OF TRANSPORTATION	FAP 399 (IL. RTE. 8) MAINTENANCE OF TRAFFIC – TYPICAL SECTIONS – STAGE III	F.A.P. RTE.	SECTION	COUNTY	TOTAL SHEETS / SHEET NO.
	PLOT SCALE = 20.624 FT / IN.	DRAWN -	REVISED -			399	36 R-7	TAZEWELL	390 / 87
	PLOT DATE = 10/21/2011	CHECKED -	REVISED -					CONTRACT NO. 68370	
		DATE - 10-21-11	REVISED -		SCALE: AS SHOWN / SHEET NO. OF SHEETS / STA. TO STA.			ILLINOIS FED. AID PROJECT	