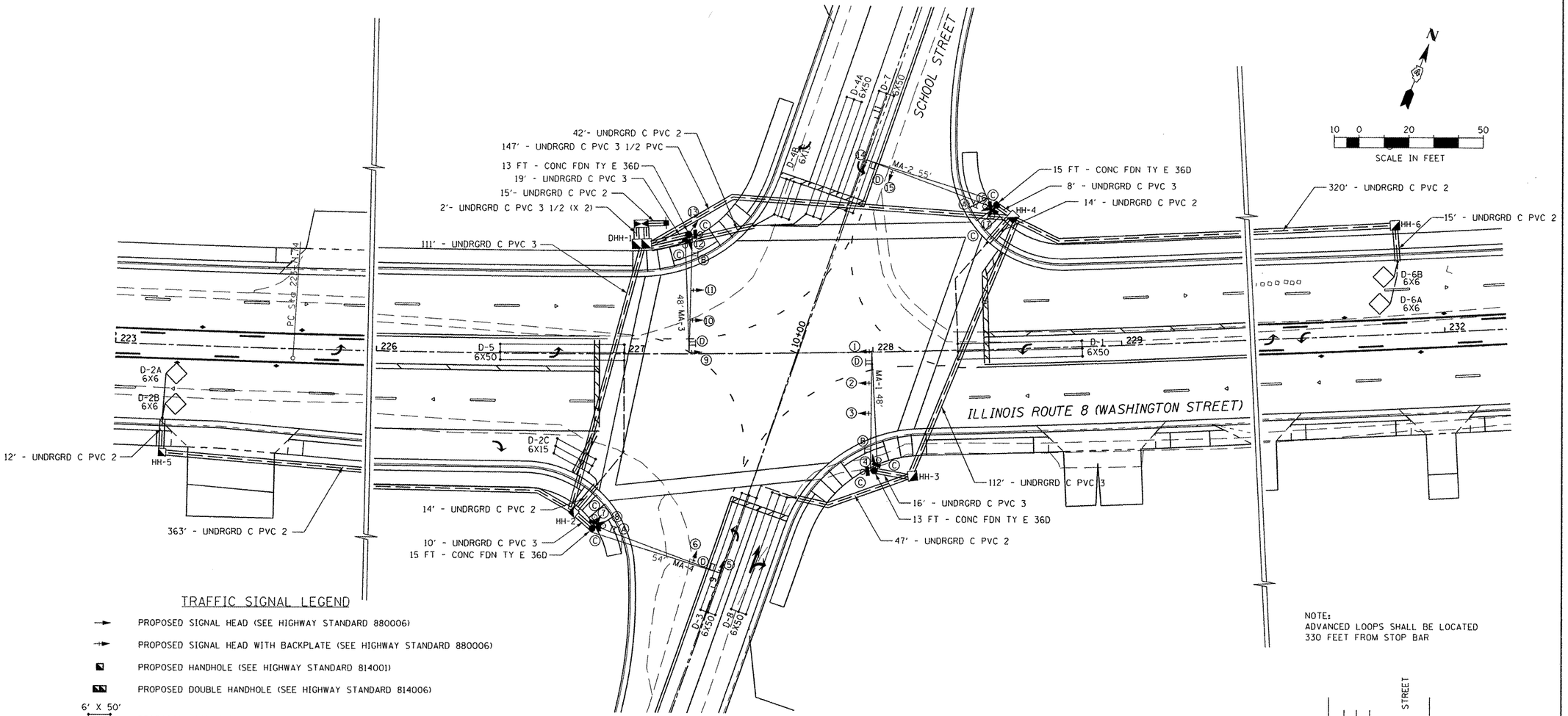

TRAFFIC SIGNAL LEGEND

- PROPOSED SIGNAL HEAD (SEE HIGHWAY STANDARD 880006)
- PROPOSED SIGNAL HEAD WITH BACKPLATE (SEE HIGHWAY STANDARD 880006)
- PROPOSED HANDHOLE (SEE HIGHWAY STANDARD 814001)
- PROPOSED DOUBLE HANDHOLE (SEE HIGHWAY STANDARD 814006)
- 6' X 50' — PROPOSED DETECTOR LOOP (SEE HIGHWAY STANDARDS 886001 & 886006)
- 6' X 6' — PROPOSED DETECTOR LOOP (SEE HIGHWAY STANDARDS 886001 & 886006)
- PROPOSED CONDUIT
- PVC — POLYVINYL CHLORIDE CONDUIT
- PROPOSED MAST ARM (LENGTH SPECIFIED) (SEE HIGHWAY STANDARD 877001 & 878001)
- SERVICE POLE (SEE HIGHWAY STANDARD 805001)
- PROPOSED CONTROLLER WITH CONCRETE FOUNDATION, TYPE D
- PROPOSED PUSH BUTTON & PEDESTRIAN SIGNAL HEAD
- PROPOSED SIGN

NOTE:
ADVANCED LOOPS SHALL BE LOCATED
330 FEET FROM STOP BAR

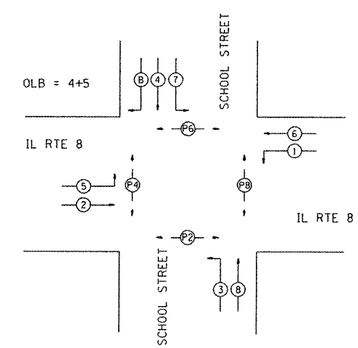

PHASE DESIGNATION DIAGRAM

FILE NAME = P:\IL 8 ITS Fiber Plans (68370)\IL 8 ITS	USER NAME = hawalder	DESIGNED - LDC	REVISED -	STATE OF ILLINOIS DEPARTMENT OF TRANSPORTATION	FAP 399 (IL. RTE. 8) TRAFFIC SIGNAL PLAN – SCHOOL ST.	F.A.P. RTE.	SECTION	COUNTY	TOTAL SHEETS	SHEET NO.
	Plans\D4-Rte8-sht-TS-School 10-21-11.dgn	DRAWN - MBB	REVISED -			399	*SECTION	TAZEWELL	390	259
	PLOT SCALE = 40.000 FT / in.	CHECKED - LDC	REVISED -			CONTRACT NO. 68370				
	PLOT DATE = 10/25/2011	DATE - *DATE	REVISED -		SCALE: 1"=20' SHEET NO. 5 OF 7 SHEETS STA. TO STA.	ILLINOIS FED. AID PROJECT				