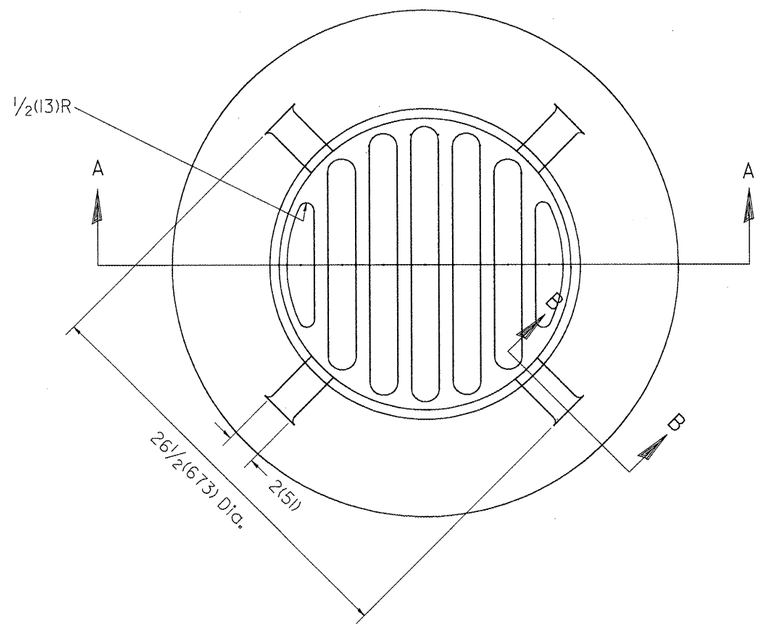

PLAN

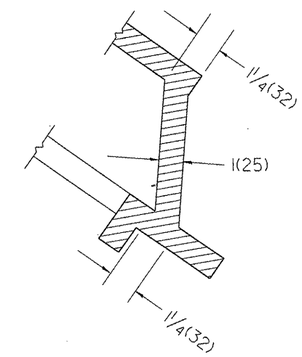

SECTION B - B

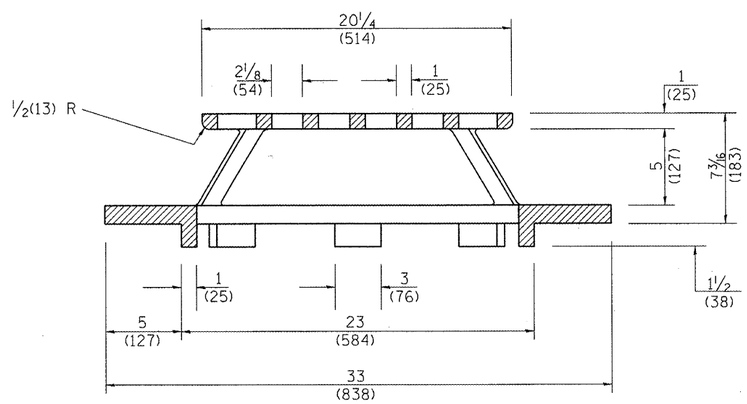

SECTION A - A

GENERAL NOTES

1. MATERIAL - Cast Gray Iron
   Weight 209 lbs (95 kg)

DESIGNER NOTE:
1. INCLUDE DISTRICT SPECIAL PROVISION.

All dimensions are in inches (millimeters) unless otherwise noted.

01-01-97	RENUM. B-10.02, NEW REVISION BOX	T.P.
10-16-06	REVISED TO 2007 SPEC.	M.A.

STATE OF ILLINOIS
DEPARTMENT OF TRANSPORTATION

TYPE 37 GRATE

NOT TO SCALE

CADD STD. 604301-D4

F.A.P. RTE.	SECTION	COUNTY	TOTAL SHEETS	SHEET NO.
399	36 R-7	TAZEWELL	390	298
		CONTRACT NO. 68370		
FED. ROAD DIST. NO.	ILLINOIS	FED. AID PROJECT		