CASE 1
(DITCH)

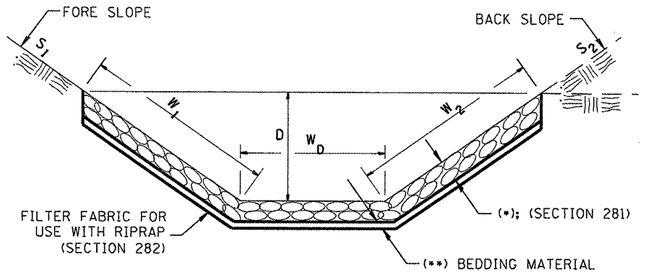

(✳)				
LOCATION	WIDTH (1)	LENGTH	RIPRAP	FABRIC
STA TO STA	lin ft (m)	lin ft (m)	tons (m tons)	sq yds (m^2)
147+18 - 150+21 LT	11.0′	303.0′	246.9	370.3
151+01 - 152+18 LT	11.0′	120.0′	97.8	146.7
152+55 - 155+00 LT	11.0′	245.0′	199.6	299.4
154+02 - 157+50 CL	VARIES	348.0′	114.8	-
152+85 - 153+15 RT	15.0′	30.0′	33.3	50.0
2+15 - 2+65 LT	18.0′	90.0′	120.0	180.0

(1) WIDTH = $W_1 + W_2 + W_D$

CASE 2
(CULVERT & SLOPE)

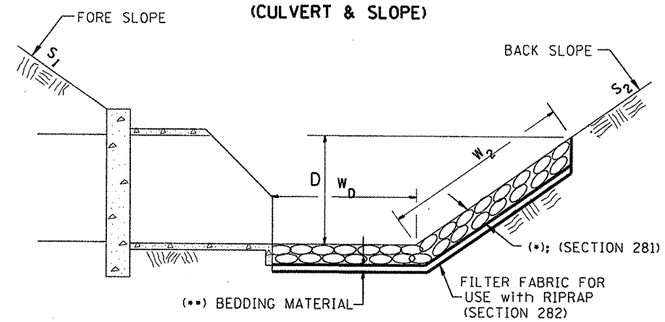

(✳)				
LOCATION	WIDTH (1)	LENGTH	RIPRAP	FABRIC
STA TO STA	lin ft (m)	lin ft (m)	tons (m tons)	sq yds (m^2)
TOTAL				

(1) WIDTH = $W_2 + W_D$

CASE 3
(CULVERT)

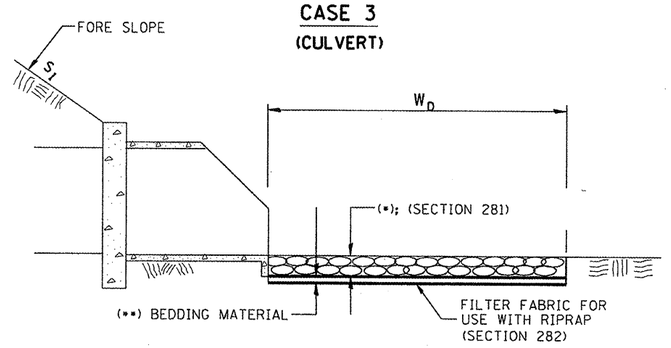

(✳)				
LOCATION	WIDTH (1)	LENGTH	RIPRAP	FABRIC
STA TO STA	lin ft (m)	lin ft (m)	tons (m tons)	sq yds (m^2)
TOTAL				

(1) WIDTH = W_D

All slope ratios are expressed as units of vertical displacement to units of horizontal displacement (V:H).

All dimensions are in inches (millimeters) unless otherwise noted.

1-1-97	RENUM. A-12.02, NEW REVISION BOX	T.P.
12-1-97	CORRECT FILTER FABRIC LEADER ARROW	J.A.
10-16-06	REVISED TO 2007 SPEC.	M.A.

STATE OF ILLINOIS
DEPARTMENT OF TRANSPORTATION

RIPRAP DITCH FOR EROSION PROTECTION

NOT TO SCALE

CADD STD. 281001-D4

F.A.P. RTE.	SECTION	COUNTY	TOTAL SHEETS	SHEET NO.
310	(38B-2)BR	MCDONOUGH	130	94

CONTRACT NO. 68691

ILLINOIS FED. AID PROJECT