STATE OF ILLINOIS
DEPARTMENT OF TRANSPORTATION

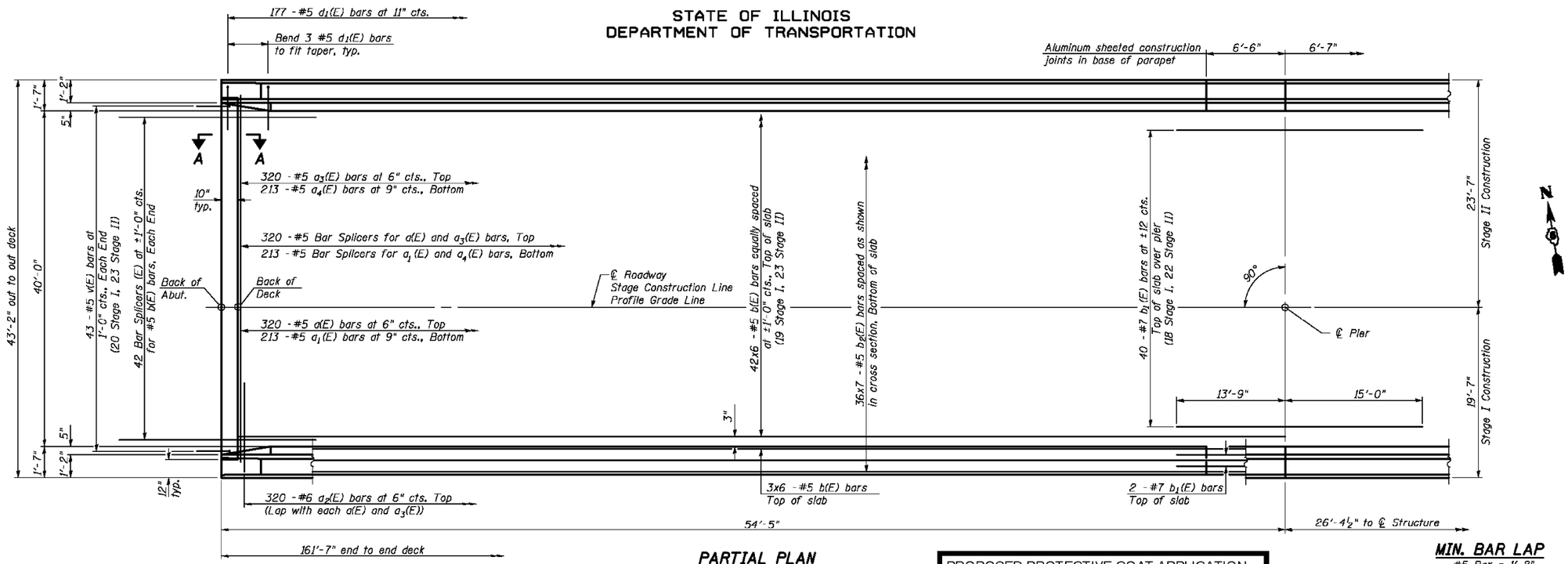

PARTIAL PLAN

MIN. BAR LAP

#5 Bar = 1'-8"

PROPOSED PROTECTIVE COAT APPLICATION

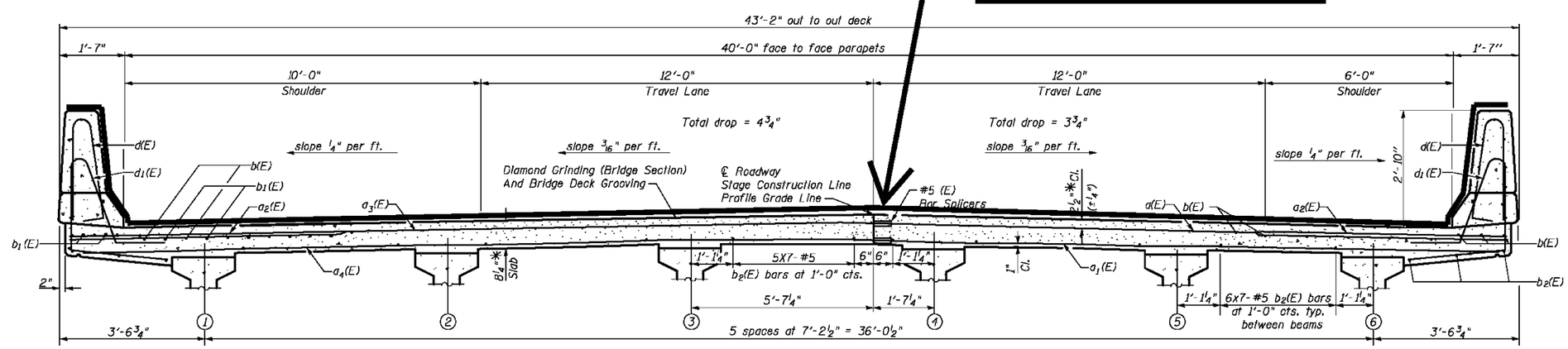

NEAR PIER

TYPICAL SECTION; FOUR-LANE WITH PARAPET; DUAL STRUCTURES

NEAR MIDSPAN

CROSS SECTION

(Looking Upstation Westbound)
(Looking Downstation Eastbound)

* Prior to grinding

Notes:
See Sheet 12 of 27 for superstructure details and Bill of Material.
Bars indicated thus 20 x 3-#5 etc. indicates 20 lines of bars with 3 lengths per line.
See Sheet 12 of 27 for parapet reinforcement.
See Sheet 27 of 27 for bar splicers details.
See Sheet 11 of 27 for diaphragm details.

DESIGNED	RRD
CHECKED	AJS
DRAWN	KAS
CHECKED	JAR

SUPERSTRUCTURE
I-74 OVER LITTLE KICKAPOO CREEK
STRUCTURE NO. 057-0120 AND 057-0121

STRAND ASSOCIATES, INC.

SHEET NO. 10	F.A.I. RTE.	SECTION	COUNTY	TOTAL SHEETS	SHEET NO.
27 SHEETS	74	(57-21B)BR	MCLEAN	61	22
	SUPERSTRUCTURE DETAILS (1 OF 3)		CONTRACT NO. 70641		
	FED. ROAD DIST. NO. 7	ILLINOIS	FED. AID PROJECT		

* VARIOUS
** FY2012 BRIDGE DECK SEALING
*** CHAMPAIGN, DEWITT, & MCLEAN

FILE NAME = c:\pw_work\pwidot\piersonbr\d0286468\D570917-sht-typical.dgn	USER NAME = piersonbr	DESIGNED -	REVISED -
		DRAWN -	REVISED -
	PLOT SCALE = 40.0000 ' / in.	CHECKED -	REVISED -
	PLOT DATE = 11/18/2011	DATE -	REVISED -

STATE OF ILLINOIS
DEPARTMENT OF TRANSPORTATION

TYPICAL SECTION;
FOUR-LANE W/PARAPET DUAL STRUCTURES

SCALE: SHEET OF SHEETS STA. TO STA.

F.A.I. RTE.	SECTION	COUNTY	TOTAL SHEETS	SHEET NO.
*	**	***	17	9
		CONTRACT NO. 70917		
	ILLINOIS	FED. AID PROJECT		