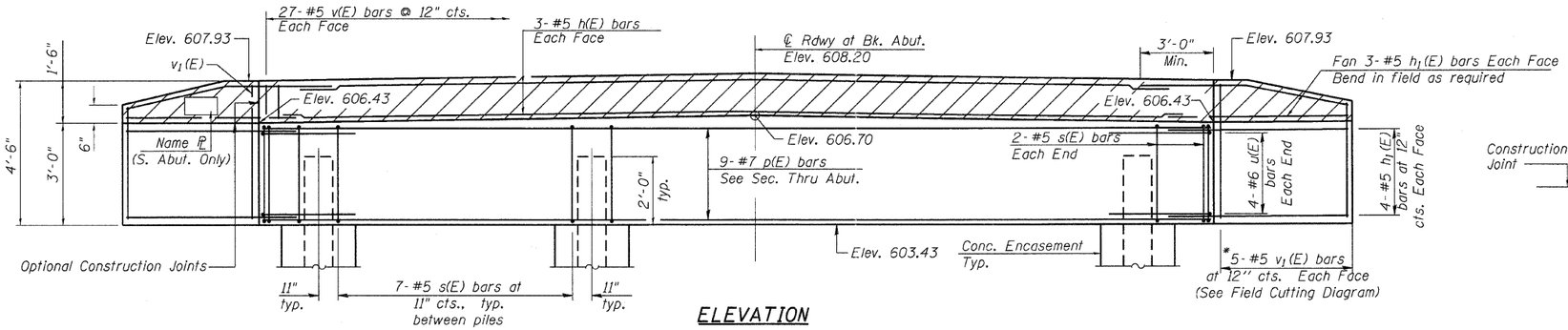

ELEVATION

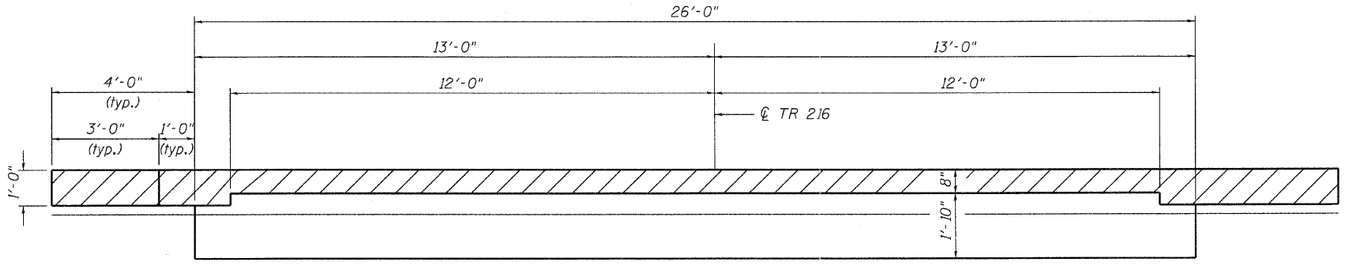

TOP VIEW

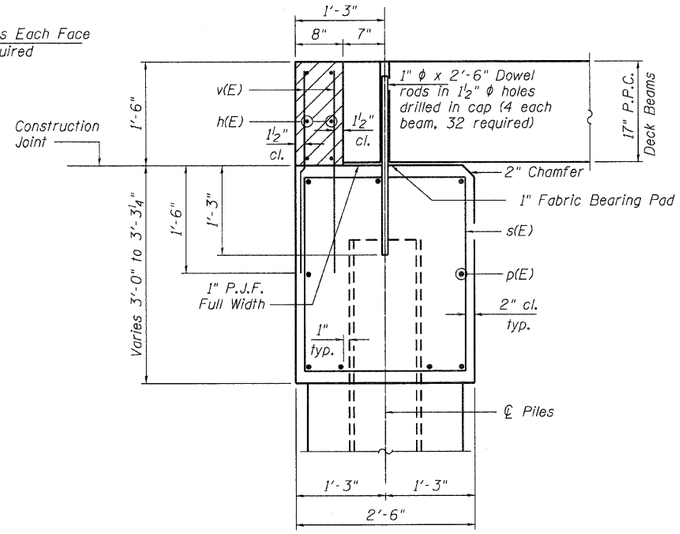

SECTION THRU ABUTMENT

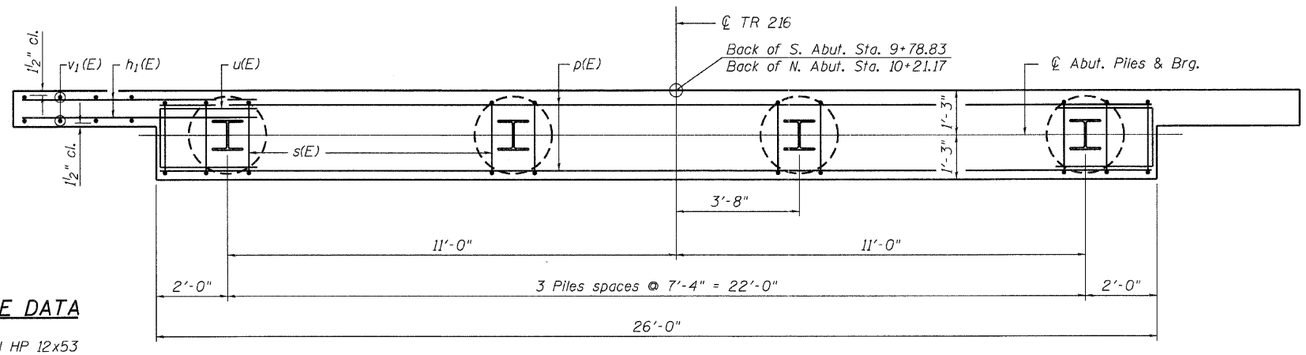

PLAN

PILE DATA

Type: Steel HP 12x53
Nominal Required Bearing: 220 kips
Factored Resistance Available: 110 kips
Est. Length: 47 ft. (S. Abut.), 40 ft. (N. Abut.)
No. Production Piles: 7
* No. Test Piles: 1 (S. Abut.), 0 (N. Abut.)

* TEST PILES DRIVEN TO 110% N.R.B. IN PRODUCTION LOCATION

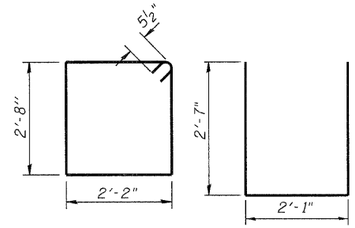

BARS s(E) BAR u(E)

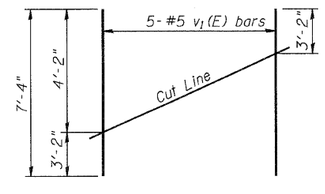

* FIELD CUTTING DIAGRAM

Order $v_1(E)$ full length. Cut as shown and use remainder of bars in opposite face.

NOTES

The hatched area shall be poured after the beams are in place. The backwall shall be cast against the beams.

Dowel rods to be grouted after beams are in place and allowed to cure (Min. 24 hrs.) prior to grouting the shear keys. Cost shall be included in the cost of Precast Prestressed Concrete Deck Beams (17" Depth).

If pile interferes with dowel embedment, reduce dowel embedment depth so dowel is at the top of the pile (min. embedment = 1'-0")

BILL OF MATERIAL TWO ABUTMENTS

Bar	No.	Size	Length	Shape
h(E)	12	#5	25'-9"	
$h_1(E)$	56	#5	7'-0"	
p(E)	18	#7	25'-9"	
s(E)	50	#5	10'-7"	
u(E)	16	#6	7'-3"	
v(E)	108	#5	2'-10"	
$v_1(E)$	20	#5	7'-4"	
Structure Excavation			Cu. Yd.	82
Concrete Structures			Cu. Yd.	19.5
Concrete Encasement			Cu. Yd.	2.8
Reinforcement Bars, Epoxy Coated			Pound	2,880
Furnishing Steel Piles, HP 12x53			Foot	301
Driving Steel Piles			Foot	301
Test Pile, HP 12x53			Each	1

FILENAME: I:\jobs\christiancounty\7166 tr 126 over buckhart creek\cadd\cadd sheets\0113418-00000.dgn

USER NAME = dheberling	DESIGNED - TJZ	REVISED	
	DRAWN - DLH	REVISED	
PLOT SCALE = 0:1.0000 ':' / IN.	CHECKED - SDS	REVISED	
PLOT DATE = 11/14/2011	DATE - 8/25/11	REVISED	

WHKS & CO. ENGINEERING
7018 KINGSMILL CT., SPRINGFIELD, IL
(217) 483-9457
DESIGN FIRM #184001036

STATE OF ILLINOIS
DEPARTMENT OF TRANSPORTATION

ABUTMENTS
TR 216 OVER BUCKHART CREEK
SCALE: | SHEET NO. 6 OF 9 SHEETS | ℄ STA.

T.R. RTE.	SECTION	COUNTY	TOTAL SHEETS	SHEET NO.
216	08-16112-00-BR	CHRISTIAN	26	10
S.N. - 011-3418		CONTRACT 93559		
FED. ROAD DIST. NO.	ILLINOIS	FED. AID PROJECT		