F.A.P. RTE.	SECTION	COUNTY	TOTAL SHEETS	SHEET NO.
95	*	JASPER	546	229
STA.		TO STA.		
FED. ROAD DIST. NO.	ILLINOIS	FED. AID PROJECT		

*(5,6)Y,RS-2,6BR-7
CONTRACT NO. 94437

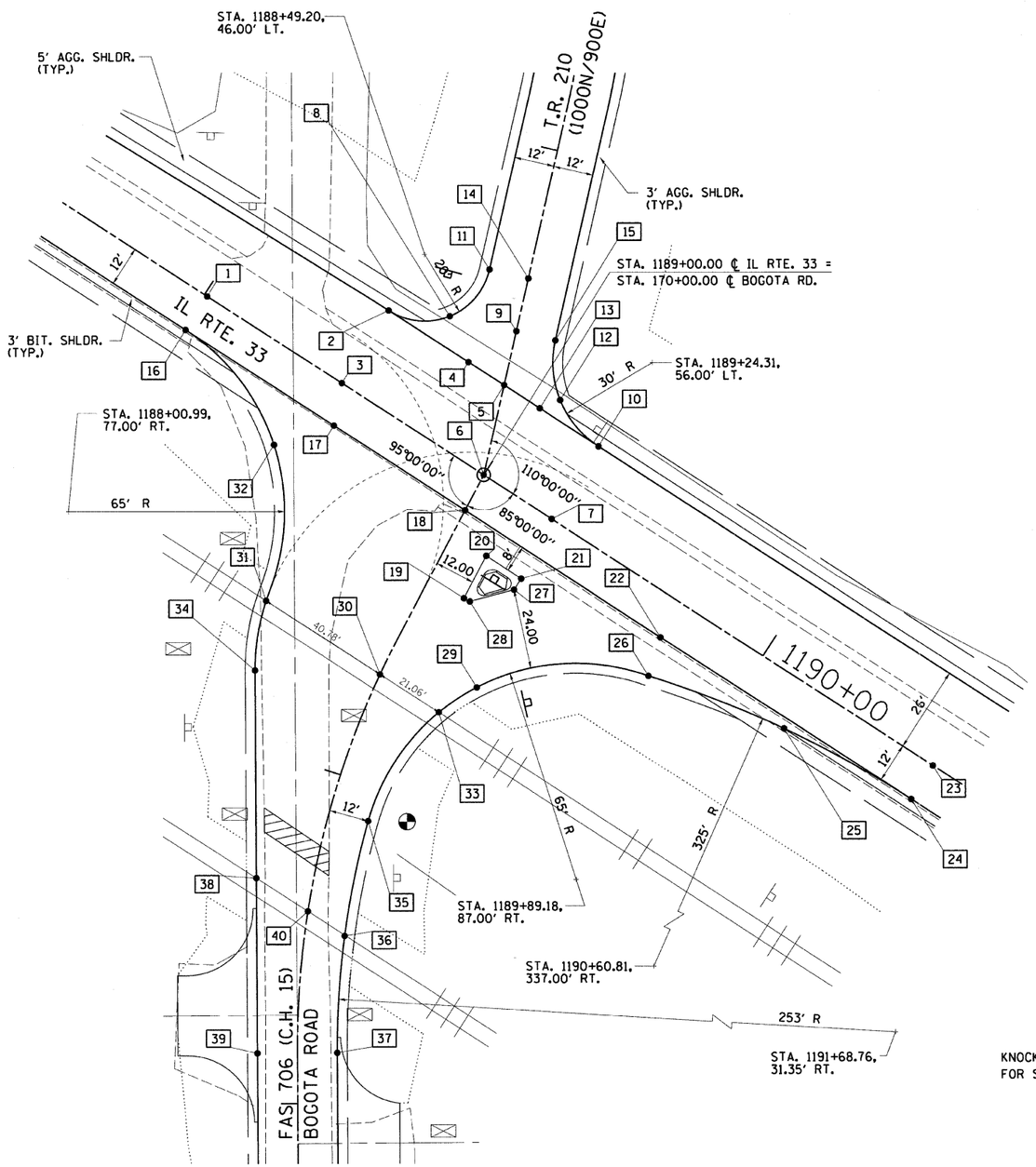

FAS 706 (C.H. 15) BOGOTA ROAD

FAS 706 (C.H. 15) BOGOTA ROAD

BOX NUMBER	STATIONING ALONG IL. RTE. 33	OFFSET FEET	STATIONING ALONG BOGOTA RD.	OFFSET FEET	ELEVATION FEET
1	1188+00.99	0.00 LT	170+33.87	93.04 LT	555.24
2	1188+49.20	26.00 LT	170+41.81	38.84 LT	554.78
3	1188+49.20	0.00 LT	170+17.38	47.73 LT	555.17
4	1188+77.77	26.00 LT	170+32.04	12.00 LT	554.78
5	1188+90.54	26.00 LT	170+27.67	0.00 RT	554.83
6	1189+00.00	0.00 RT	170+00.00	0.00 RT	555.22
7	1189+24.31	0.00 LT	169+97.88	24.22 RT	555.20
8	1188+65.59	34.53 LT	170+44.22	20.53 LT	554.53
9	1188+84.84	41.64 LT	170+44.31	0.00 LT	554.66
10	1189+24.31	26.00 LT	170+16.12	31.74 RT	554.81
11	1188+68.00	52.84 LT	170+60.60	12.00 LT	554.25
12	1189+07.11	31.43 LT	170+27.10	17.43 RT	554.65
13	1189+03.31	26.00 LT	170+23.30	12.00 RT	554.80
14	1188+79.27	56.95 LT	170+60.60	0.00 LT	554.49
15	1188+96.12	45.74 LT	170+44.31	12.00 RT	554.42
16	1188+00.99	12.00 RT	170+22.59	97.14 LT	555.06
17	1188+54.07	12.00 RT	169+92.05	46.80 LT	554.98
18	1189+01.05	12.00 RT	169+87.96	0.00 LT	555.04
19	1189+15.05	34.31 RT	169+64.51	12.00 RT	554.86
20	1189+13.80	20.00 RT	169+78.88	12.00 RT	554.93
21	1189+26.33	20.05 RT	169+77.74	24.48 RT	554.94
22	1189+71.05	12.00 RT	169+81.86	69.74 RT	555.02
23	1190+60.81	0.00 LT	169+85.99	160.20 RT	555.28
24	1190+60.81	12.00 RT	169+74.03	159.16 RT	555.10
25	1190+17.16	14.95 RT	169+74.90	115.41 RT	554.95
26	1189+74.29	23.73 RT	169+69.89	71.94 RT	554.65
27	1189+26.32	24.00 RT	169+73.80	24.12 RT	554.90
28	1189+17.04	34.13 RT	169+64.51	14.00 RT	554.83
29	1189+32.76	54.73 RT	169+42.31	27.85 RT	555.35
30	1189+06.19	67.23 RT	169+32.49	0.00 RT	555.60
31	1188+65.41	67.20 RT	169+37.30	40.45 LT	555.60
32	1188+42.10	26.65 RT	169+78.50	60.00 LT	554.60
33	1189+27.25	67.25 RT	169+29.37	20.84 RT	555.60
34	1188+73.94	86.55 RT	169+19.42	34.93 LT	555.69
35	1189+27.09	106.24 RT	168+88.84	12.00 RT	555.79
36	1189+39.72	138.82 RT	168+52.21	12.00 RT	555.95
37	1189+65.22	182.38 RT	168+00.00	12.00 RT	555.06
38	1189+08.10	138.83 RT	168+64.83	16.95 LT	555.95
39	1189+45.12	195.51 RT	168+00.00	12.00 LT	555.06
40	1189+26.53	138+82 RT	168+57.81	0.00 RT	555.95

N

0 20 40
SCALE IN FEET

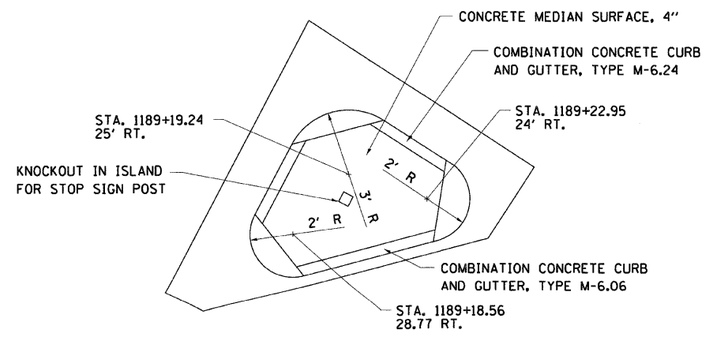

ISLAND DETAIL

REVISIONS	
NAME	DATE

ILLINOIS DEPARTMENT OF TRANSPORTATION

INTERSECTION DETAILS

FAP ROUTE 95 (IL RTE. 33)
SECTION (5,6)Y,RS-2,6BR-7
JASPER COUNTY

SCALE: VERT.
HORIZ.
DATE: 08/21/02

DRAWN BY: JAMESON
DESIGNED BY: COLBROOK
CHECKED BY: COLBROOK

GREENE & BRADFORD, INC.
OF SPRINGFIELD
CONSULTING ENGINEERS
1500 CONSTITUTION DRIVE
SPRINGFIELD, ILLINOIS 62707
PROFESSIONAL DESIGN FIRM - 184-001003
PROFESSIONAL & STRUCTURAL ENGINEERING CORPORATION
(217) 753-8884, (217) 753-6277 FL E-MAIL - ooo@greenebradford.com

COMPUTER FILE NO.
INT-07-A
PROJECT 01256
2/26/10-FAV

DESIGN

INT.	DATE	REASON

PLAN
SURVEYED
PLOTTED
ALIGNMENT CHECKED
R.O.W. CHECKED
CADD FILE NAME
NOTE BOOK NO.
BY DATE

PLOTS & CHECKS

INT.	DATE	NO.	REASON

PROFILE
SURVEYED
PLOTTED
GRADES CHECKED
STRUCTURE NOTATNS CHKD
NOTE BOOK NO.
BY DATE

CHECKS

INT.	DATE	REASON

IDOTPL-20 - 1:20 8/25/98